UHF DIGITAL TRANSCEIVER

NX-800

SERVICE MANUAL

KENWOOD

Kenwood Corporation

© 2007-12 PRINTED IN JAPAN
B51-8803-00 (S) 343

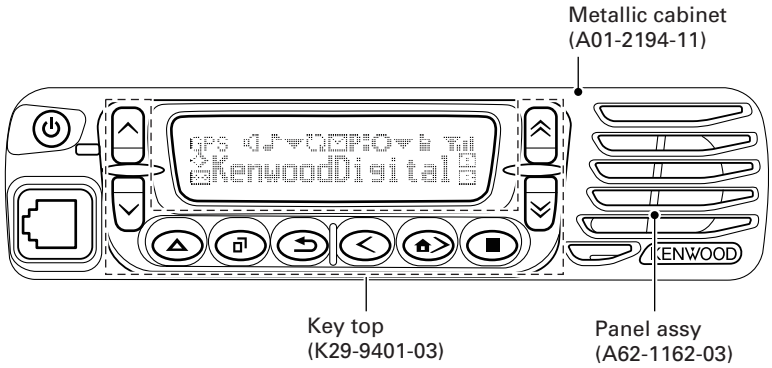

CONTENTS

GENERAL 2
SYSTEM SET-UP 4
REALIGNMENT 5
INSTALLATION 8
DISASSEMBLY FOR REPAIR 15
CIRCUIT DESCRIPTION 18
COMPONENTS DESCRIPTION 24
PARTS LIST 27
EXPLODED VIEW 40
PACKING 41
TROUBLE SHOOTING 42
ADJUSTMENT 44
TERMINAL FUNCTION 62
PC BOARD
TX-RX UNIT (X57-7390-10) (B/2) 71
TX-RX UNIT (X57-7390-10) (A/2) 72
DISPLAY UNIT (X54-3640-10) 76
SCHEMATIC DIAGRAM
TX-RX UNIT (X57-7390-10) 78
DISPLAY UNIT (X54-3640-10) 93
INTERCONNECTION DIAGRAM 96
BLOCK DIAGRAM 98
LEVEL DIAGRAM 100
SPECIFICATIONS ..... BACK COVER

This product uses Lead Free solder.

GENERAL

Document Copyrights

Copyright 2007 by Kenwood Corporation. All rights reserved.
No part of this manual may be reproduced, translated, distributed, or transmitted in any form or by any means, electronic, mechanical, photocopying, recording, or otherwise, for any purpose without the prior written permission of Kenwood.

Disclaimer

While every precaution has been taken in the preparation of this manual, Kenwood assumes no responsibility for errors or omissions. Neither is any liability assumed for damages resulting from the use of the information contained herein. Kenwood reserves the right to make changes to any products herein at any time for improvement purposes.

Firmware Copyrights

The title to and ownership of copyrights for firmware embedded in Kenwood product memories are reserved for Kenwood Corporation. Any modifying, reverse engineering, copy, reproducing or disclosing on an Internet website of the firmware is strictly prohibited without prior written consent of Kenwood Corporation. Furthermore, any reselling, assigning or transferring of the firmware is also strictly prohibited without embedding the firmware in Kenwood product memories.

NXDN Transceivers:
The AMBE+2(TM) voice coding technology is embedded in the firmware under the license of Digital Voice Systems, Inc.

INTRODUCTION

SCOPE OF THIS MANUAL

This manual is intended for use by experienced technicians familiar with similar types of commercial grade communications equipment. It contains all required service information for the equipment and is current as of this publication date. Changes which may occur after publication are covered by either Service Bulletins or Manual Revisions, which are issued as required.

ORDERING REPLACEMENT PARTS

When ordering replacement parts or equipment information, the full part identification number should be included. This applies to all parts : components, kits, and chassis. If the part number is not known, include the chassis or kit number of which it is a part and a sufficient description of the required component for proper identification.

PERSONAL SAFETY

The following precautions are recommended for personal safety :

- DO NOT transmit if someone is within two feet (0.6 meter) of the antenna.
- DO NOT transmit until all RF connectors are secure and any open connectors are properly terminated.
- SHUT OFF this equipment when near electrical blasting caps or while in an explosive atmosphere.
- All equipment should be properly grounded before power-up for safe operation.
- This equipment should be serviced by only qualified technicians.

PRE-INSTALLATION CONSIDERATIONS

1. UNPACKING

Unpack the radio from its shipping container and check for accessory items. If any item is missing, please contact KENWOOD immediately.

2. LICENSING REQUIREMENTS

Federal regulations require a station license for each radio installation (mobile or base) be obtained by the equipment owner. The licensee is responsible for ensuring transmitter power, frequency, and deviation are within the limits permitted by the station license.

Transmitter adjustments may be performed only by a licensed technician holding an FCC first, second or general class commercial radiotelephone operator's license. There is no license required to install or operate the radio.

3. PRE-INSTALLATION CHECKOUT

3-1. Introduction

Each radio is adjusted and tested before shipment. However, it is recommended that receiver and transmitter operation be checked for proper operation before installation.

3-2. Testing

The radio should be tested complete with all cabling and accessories as they will be connected in the final installation. Transmitter frequency, deviation, and power output should be checked, as should receiver sensitivity, squelch operation, and audio output. Signaling equipment operation should be verified.

GENERAL

4. PLANNING THE INSTALLATION

4-1. General

Inspect the vehicle and determine how and where the radio antenna and accessories will be mounted.

Plan cable runs for protection against pinching or crushing wiring, and radio installation to prevent overheating.

4-2. Antenna

The favored location for an antenna is in the center of a large, flat conductive area, usually at the roof center. The trunk lid is preferred, bond the trunk lid and vehicle chassis using ground straps to ensure the lid is at chassis ground.

4-3. Radio

The universal mount bracket allows the radio to be mounted in a variety of ways. Be sure the mounting surface is adequate to support the radio's weight. Allow sufficient space around the radio for air cooling. Position the radio close enough to the vehicle operator to permit easy access to the controls when driving.

4-4. DC Power and wiring

1. This radio may be installed in negative ground electrical systems only. Reverse polarity will cause the cable fuse to blow. Check the vehicle ground polarity before installation to prevent wasted time and effort.
2. Connect the positive power lead directly to the vehicle battery positive terminal. Connecting the Positive lead to any other positive voltage source in the vehicle is not recommended.
3. Connect the ground lead directly to the battery negative terminal.
4. The cable provided with the radio is sufficient to handle the maximum radio current demand. If the cable must be extended, be sure the additional wire is sufficient for the current to be carried and length of the added lead.

5. INSTALLATION PLANNING – CONTROL STATIONS

5-1. Antenna system

Control station. The antenna system selection depends on many factors and is beyond the scope of this manual. Your KENWOOD dealer can help you select an antenna system that will best serve your particular needs.

5-2. Radio location

Select a convenient location for your control station radio which is as close as practical to the antenna cable entry point. Secondly, use your system's power supply (which supplies the voltage and current required for your system). Make sure sufficient air can flow around the radio and power supply to allow adequate cooling.

SERVICE

This radio is designed for easy servicing. Refer to the schematic diagrams, printed circuit board views, and alignment procedures contained in this manual.

NOTE

- If you do not intend to use the speaker 3.5-mm jack and the D-sub 25-pin connector, fit the supplied speaker-jack cap and D-sub cap to stop dust and sand from getting in.
- If the transceiver is turned ON or OFF when the power-on/off status message is enabled, the transceiver sends the status.

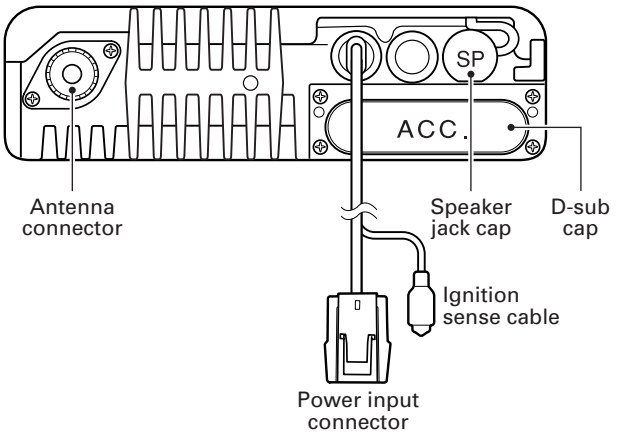

SYSTEM SET-UP

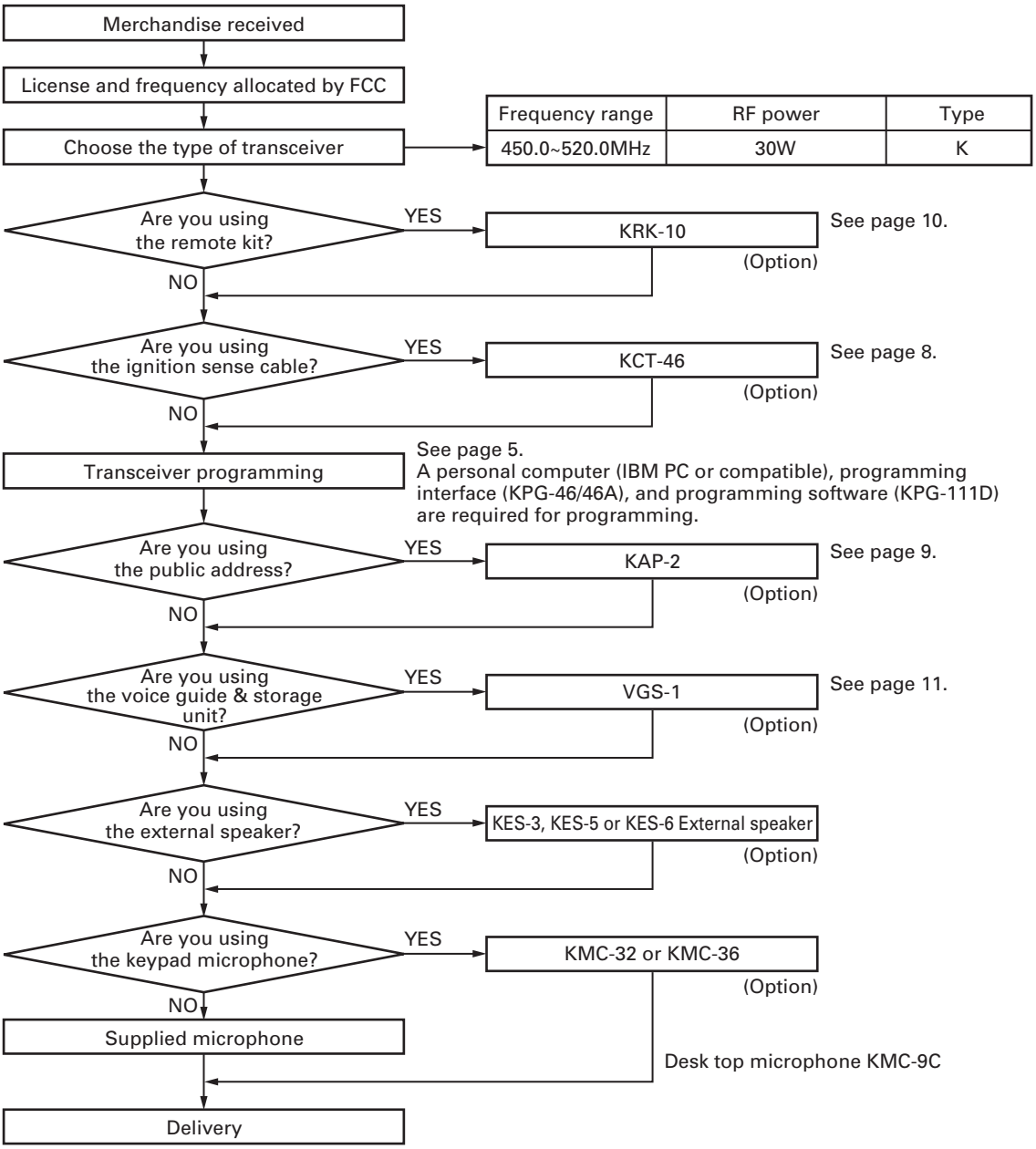

REALIGNMENT

1. Modes

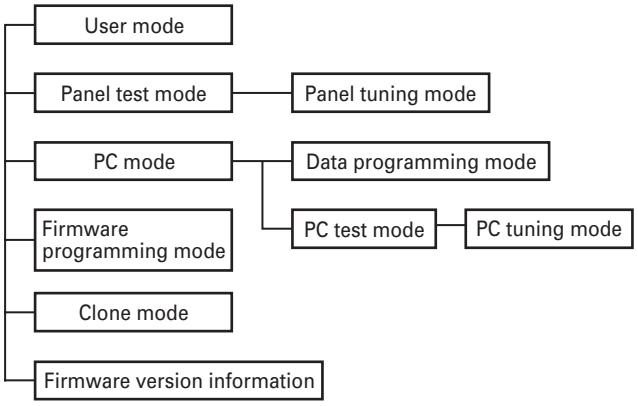

Mode	Function
User mode	For normal use.
Panel test mode	Used by the dealer to check the fundamental characteristics.
Panel tuning mode	Used by the dealer to tune the audio.
PC mode	Used for communication between the radio and PC.
Data programming mode	Used to read and write frequency data and other features to and from the radio.
PC test mode	Used to check the radio using the PC. This feature is included in the FPU.
PC tuning mode	Used to tune the radio using the PC. This feature is included in the FPU.
Firmware programming mode	Used when changing the main program of the flash memory.
Clone mode	Used to transfer programming data from one radio to another.
Firmware version information	Used to confirm the internal firmware version.

2. How to Enter Each Mode

Mode	Operation
User mode	Power ON
Panel test mode	[⮌] + Power ON
PC mode	Received commands from PC
Panel tuning mode	[Panel test mode] + [⧉]
Firmware programming mode	[⧉] + Power ON
Clone mode	[<] + Power ON
Firmware version information	[▲] + Power ON

3. Panel Test Mode

Setting method refer to ADJUSTMENT.

4. Panel Tuning Mode

Setting method refer to ADJUSTMENT.

5. PC Mode

5-1. Preface

The transceiver is programmed by using a personal computer, programming interface (KPG-46/46A) and programming software (KPG-111D).

The programming software can be used with a PC or compatible. Figure 1 shows the setup of a PC for programming.

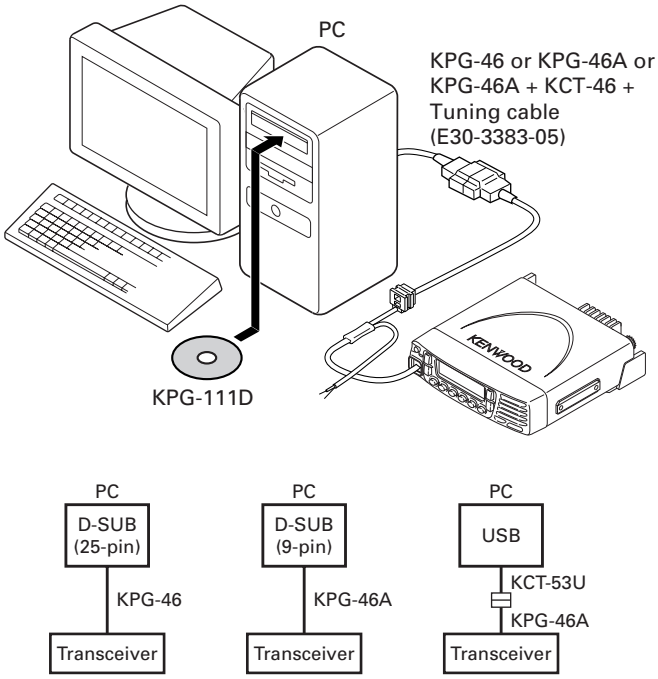

Fig. 1

5-2. Connection procedure

1. Connect the transceiver to the computer using the interface cable and USB adapter (When the interface cable is KPG-46A, the KCT-53U can be used.).

Notes:

- You must install the KCT-53U driver in the computer to use the USB adapter (KCT-53U).
- When using the USB adapter (KCT-53U) for the first time, plug the KCT-53U into a USB port on the computer with the computer power ON.

2. When the POWER switch on, user mode can be entered immediately. When PC sends command the transceiver enter PC mode, and "PROGRAM" is displayed on the LCD. When data transmitting from transceiver, the red LED is lights. When data receiving to transceiver, the green LED is lights.

Note:

The data stored in the computer must match the "Model Name" when it is written into the flash memory.

REALIGNMENT

5-3. KPG-46/KPG-46A description (PC programming interface cable: Option)

The KPG-46/46A is required to interface the transceiver to the computer. It has a circuit in its D-sub connector (KPG-46 : 25-pin, KPG-46A : 9-pin) case that converts the RS-232C logic level to the TTL level.

The KPG-46/46A connects the 8-pin microphone connector of the transceiver to the RS-232C serial port of the computer.

5-4. KCT-53U description (USB adapter : Option)

The KCT-53U is a cable which connects the KPG-46A to a USB port on a computer.

When using the KCT-53U, install the supplied CD-ROM (with driver software) in the computer. The KCT-53U driver runs under Windows 2000 or XP.

5-5. Programming software KPG-111D description

The KPG-111D is the programming software for the transceiver supplied on a CD-ROM. This software runs under MS-Windows 2000, XP or Vista on an IBM-PC or compatible machine.

The data can be input to or read from the transceiver and edited on the screen. The programmed or edited data can be printed out. It is also possible to tune the transceiver.

6. Firmware Programming Mode

6-1. Preface

Flash memory is mounted on the transceiver. This allows the transceiver to be upgraded when new features are released in the future. (For details on how to obtain the firmware, contact Customer Service.)

6-2. Connection procedure

Connect the transceiver to the personal computer (IBM PC or compatible) using the interface cable (KPG-46/46A) and USB adapter (KCT-53U : when the interface cable is KPG-46A, the KCT-53U can be used.). (Connection is the same as in the PC Mode.)

Note :

You can only program firmware from the 8-pin microphone connector on the front panel. Using the 25-pin logic interface on the rear panel will not work.

6-3. Programming

1. Start up the firmware programming software (Fpro.exe (ver. 4.0 or later)). The Fpro.exe exists in the KPG-111D installed holder.
2. Set the communications speed (normally, 115200 bps) and communications port in the configuration item.
3. Set the firmware to be updated by File name item.
4. Turn the transceiver power ON with the [ ] key held down. Then, the orange LED on the transceiver lights and "PROGRAM 115200" is displayed.
5. Check the connection between the transceiver and the personal computer, and make sure that the transceiver is in the Program mode.
6. Press write button in the window. When the transceiver starts to receive data, the [LOADING] display lights.
7. If writing ends successfully, the checksum is calculated and a result is displayed.
8. If you want to continue programming other transceivers, repeat steps 4 to 7.

Note:

This mode cannot be entered if the Firmware Programming mode is set to Disable in the Programming software.

6-4. Function

1. If you press the [■] key while "PROGRAM 115200" is displayed, the display changes to "PROGRAM 19200" (The LED blinks green) to indicate that the write speed is low speed (19200 bps). If you press the [■] key again while "PROGRAM 19200" is displayed, the display changes to "PROGRAM 38400" (The LED lights red and orange alternatively). If you press the [■] key again while "PROGRAM 38400" is displayed, the display changes to "PROGRAM 57600" (The LED blinks orange). If you press the [■] key again while "PROGRAM 57600" is displayed, the display returns to "PROGRAM 115200" (The LED lights orange).
2. If you press the [△] key while "PROGRAM 115200" is displayed, the checksum is calculated, and a result is displayed. If you press the [△] key again while the checksum is displayed, "PROGRAM 115200" is redisplayed.

Note:

Normally, write in the high-speed mode.

7. Clone Mode

Programming data can be transferred from one radio to another by connecting them via their 8-pin microphone connectors. The operation is as follows (the transmit radio is the master and the receive radio is a slave).

The following data cannot be cloned.

- Tuning data
- Embedded message with password
- ESN (Electronic Serial Number) data

Notes:

The following data can be cloned.

- Fleet (own)/ID (own) for FleetSync
- Unit ID (own) for NXDN

1. Turn the master transceiver power ON with the [<] key held down. If the read authorization password is set to the transceiver, the transceiver displays "CLONE LOCK" If the password is not set, the transceiver displays "CLONE MODE".
2. When you enter the correct password, and "CLONE MODE" is displayed, the transceiver can be used as the cloning master. The following describes how to enter the password.

REALIGNMENT

3.

- **How to enter the password with the microphone keypad;**
  If you press a key while "CLONE LOCK" is displayed, the number that was pressed is displayed on the transceiver. Each press of the key shifts the display in order to the left. When you enter the password and press the [∗] key, "CLONE MODE" is displayed if the entered password is correct. If the password is incorrect, "CLONE LOCK" is redisplayed.
- **How to enter the password with the [⌃] and [⌄] keys;**
  If the [⌃] and [⌄] keys is pressed while "CLONE LOCK" is displayed, number (0 to 9) are displayd flashing. When you press the [⧉] key, the currently selected number is determined. If you press the [⧉] key after enterning the password in this procedure, "CLONE MODE" is displayed if the entered password is correct. If the password is incorrect, "CLONE LOCK" is redisplayed.

4. Power on the slave transceiver.
5. Connect the cloning cable (Part No. E30-3382-05) to the modular microphone jacks on the master and slave.
6. Press the [⧉] key on the master while the master displays "CLONE MODE" The data of the master is sent to the slave. While the slave is receiving the data, "PROGRAM" is displayed. When cloning of data is completed, the master displays "END", and the slave automatically operates in the User mode. The slave can then be operated by the same program as the master.
7. The other slave can be continuously cloned. When the [⧉] key on the master is pressed while the master displays "END", the master displays "CLONE MODE" Carry out the operation in step 4 to 6. Can not be cloned if the overwrite password is programmed to the slave.

Note:

Only the same models can be cloned together.

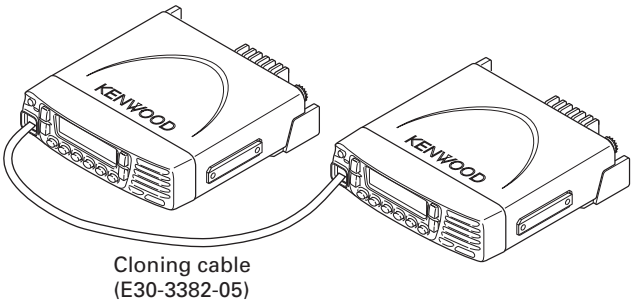

Fig. 2

8. Firmware Version Information

Turn the transceiver ON with the [▲] key held down. Then, the version is displayed during holding the [▲] key.

INSTALLATION

1. Ignition Sense Cable (KCT-46 : Option)

The KCT-46 is an optional cable for enabling the ignition function. The ignition function lets you turn the power to the transceiver on and off with the car ignition key.

1-1. Connecting the KCT-46 cable to the transceiver

1. Open the KCT-46 fuse holder and insert a mini blade fuse (3A). (①)
2. While holding a clear protective cover, remove the black cap at the end of the yellow cable (ignition sense cable) of the transceiver. (②)
3. Connect the plug of the KCT-46 to the yellow cable terminal of the transceiver. (③)
4. Connect the other end of the KCT-46 to the ignition line of the car. (④)

Note : You must setup using the KPG-111D.

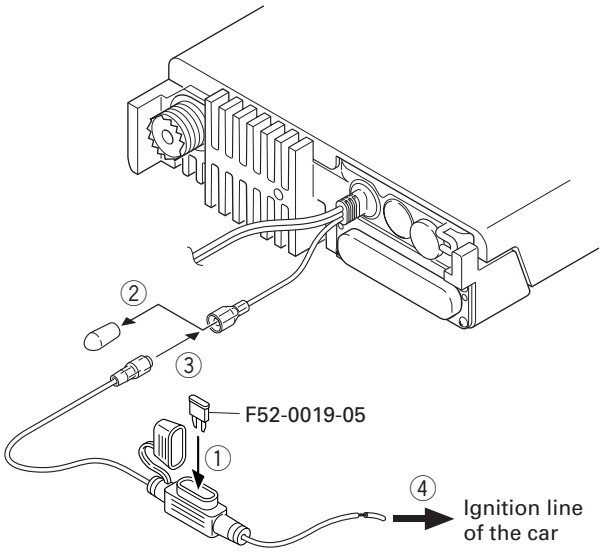

Fig. 1

INSTALLATION

2. Horn Alert/P.A. Relay Unit (KAP-2 : Option)

The Horn alert (max. 2A drive), Public address and External speaker function are enabled by installing the KAP-2 in the transceiver.

2-1. Installing the KAP-2 unit in the transceiver (The kit A is not used in the KAP-2 accessories)

1. Remove the cabinet, top packing and shielding plate of the transceiver.
2. Set the KAP-2 relay unit jumper pins according to the purpose of use.
3. Remove the 6-pin jumper connector inserted in the TX-RX unit (A/2) connector (CN705). (①)
4. Insert one side of the lead wire with connector (E37-1114-05) into the relay unit connector (CN3) (②) and the other side into the TX-RX unit (A/2) connector (CN705) (③).
5. Place the relay unit at the position shown in Figure 2-2 and secure it to the chassis with a screw.
6. Remove the cap on the rear of the chassis by pushing it from the inside with your finger. (④)
7. Pass the 6-pin connector of the cable (E37-1113-05) through the chassis hole (⑤) and insert the bush into the chassis hole.
8. Rotate the bush of the cable 90 degrees counterclockwise as viewed from the rear of the chassis. (⑥)
9. Insert the 6-pin connector of the cable into the connector (CN2) of the KAP-2 relay unit. (⑦)

Note : You must setup using the KPG-111D.

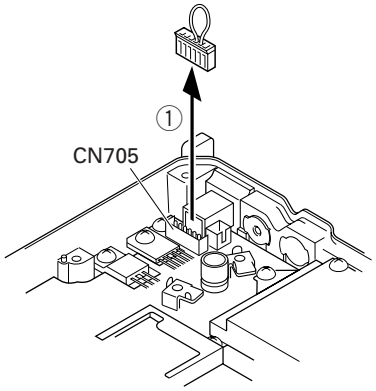

Fig. 2-1

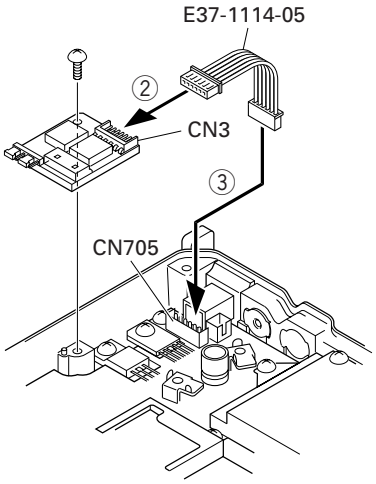

Fig. 2-2

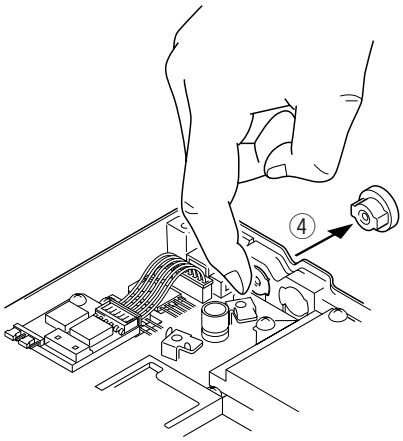

Fig. 2-3

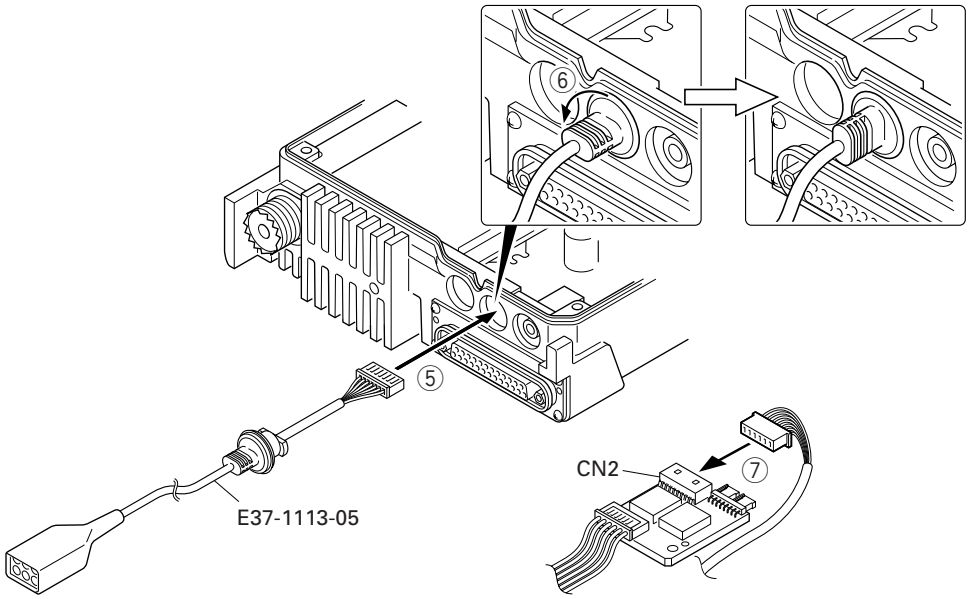

Fig. 2-4

INSTALLATION

3. Control Head Remote Kit (KRK-10 : Option)

The KRK-10 remote kit is used to remotely operate the transceiver.

3-1. Installing the KRK-10 kit to the transceiver

1. Remove the front panel from the transceiver.
2. Install the KRK-10 main panel onto the transceiver.
3. Install the KRK-10 rear panel onto the front panel.
4. Connect the KRK-10 main panel to the rear panel with the cable.

■ Remove the front panel from the transceiver

1. Lift the two tabs of the panel on the bottom of the transceiver with a flat-head screwdriver (①) and remove the panel from the chassis (②).
   Note : Confirm that the tabs of the speaker hardware fixture and holder is securely fitted in the front panel.
2. Remove the flat cable from the connector (CN901) of the display unit of the panel. (③)
3. Fold the black line of the flat cable (in three parts) as shown in Figure 3-2. (④, ⑤, ⑥)

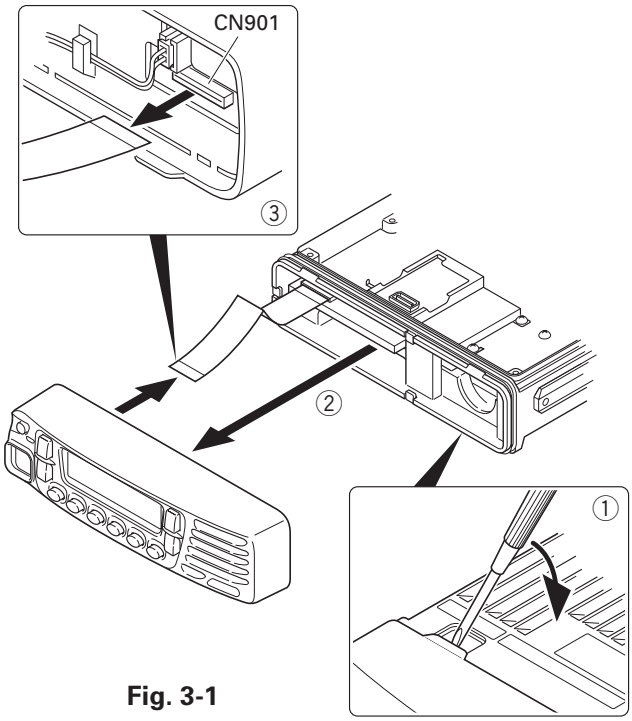

Fig. 3-1

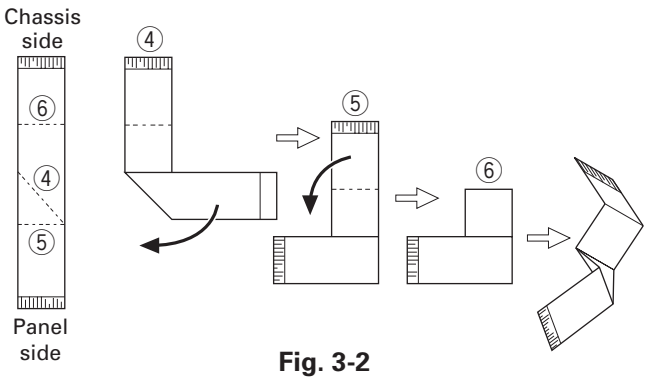

Fig. 3-2

■ Install the KRK-10 main panel onto the transceiver

4. Insert the flat cable that was removed in step 2 above into the connector (CN1) of the interface unit (A/2) of the KRK-10 main panel (A62-1101-11). (⑦)
   Note : The terminal side of the flat cable must face down when inserting the flat cable into the connector.
5. Fit the main panel with four tabs onto the front of the chassis. (⑧)
   Note : When installing the main panel onto the front of the chassis, hold down the flat cable with your fingers to prevent it from being caught.

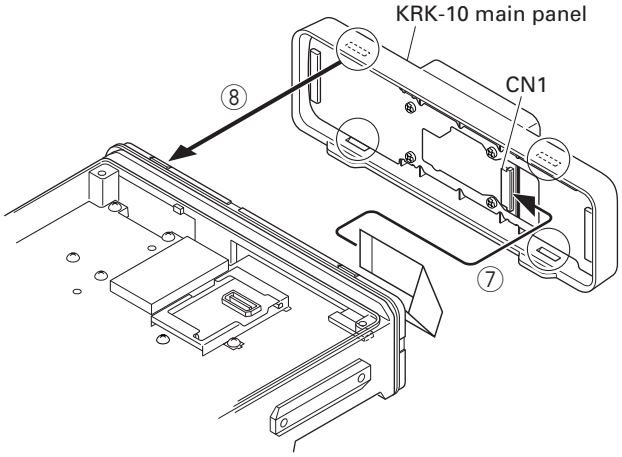

Fig. 3-3

■ Install the KRK-10 rear panel onto the front panel

6. Insert the flat cable attached to the interface unit (A/2) of the KRK-10 rear panel (A82-0056-21) into the connector (CN901) of the display unit of the panel (⑨). (The flat cable has been pre-inserted in the connector (CN2) of the rear panel at the time of shipping.)
   Note : The terminal side of the flat cable must face down when inserting the flat cable into the connector.
7. Fit the four tabs of the rear panel into the front panel. (⑩)

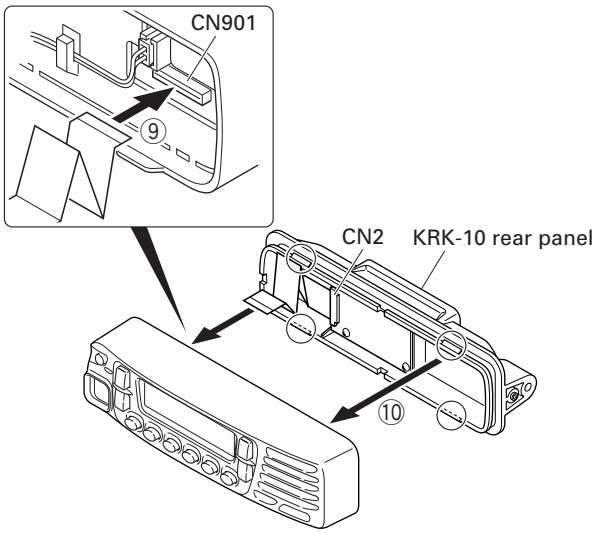

Fig. 3-4

INSTALLATION

■ **Connect the KRK-10 main panel to the rear panel with the cable**

8. Insert one 14-pin connector of the cable (E30-7514-15) into the connector (CN3) of the interface unit (A/2) of the main panel. (⑪)
   Note : Insert the connector that has a sticker onto the cable to the connector of the main panel.
9. Secure the cable bush on the main panel and fit the water-proof packing (orange) (⑫) securely over top.
10. Install the molded cover (⑬) over the connector on the main panel and secure it with two screws (⑭).
11. Insert the other 14-pin connector of the cable into the connector (CN4) of the interface unit (B/2) of the rear panel. (⑮)
12. Secure the cable bush on the rear panel and fit the water-proof packing (orange) (⑯) securely over top.
13. Install the molded cover (⑰) over the connector on the rear panel and secure it with two screws (⑱).

Note : A cable can be connected from the left side as shown in the Figure 3-5 or from right side.
However, the 14-pin connector must be connected to correct direction.

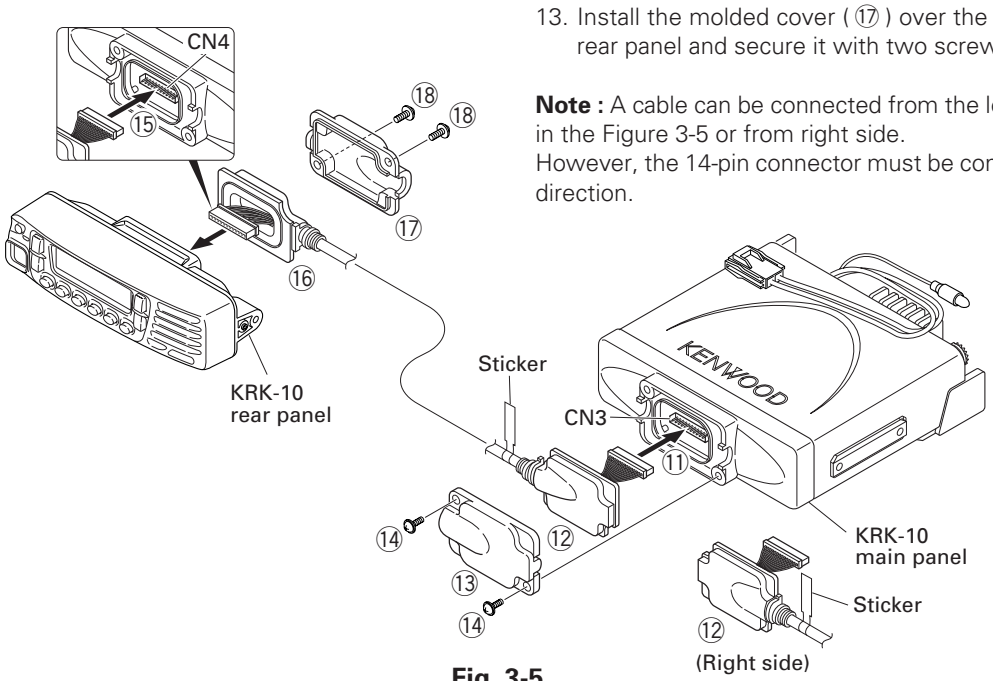

Fig. 3-5

4. Voice Guide & Storage Unit (VGS-1 : Option)

4-1. Installing the VGS-1 unit in the transceiver

1. Remove the cabinet, top packing and shielding plate of the transceiver.
2. Attach two cushions to VGS-1 as shown in Figure 4. (①)
   Note : Be sure not to cover the connector with the bottom cushion.
3. Insert the VGS-1 connector (CN1) into the TX-RX unit (A/2) connector (CN595). (②)

Note : You must setup using the KPG-111D.

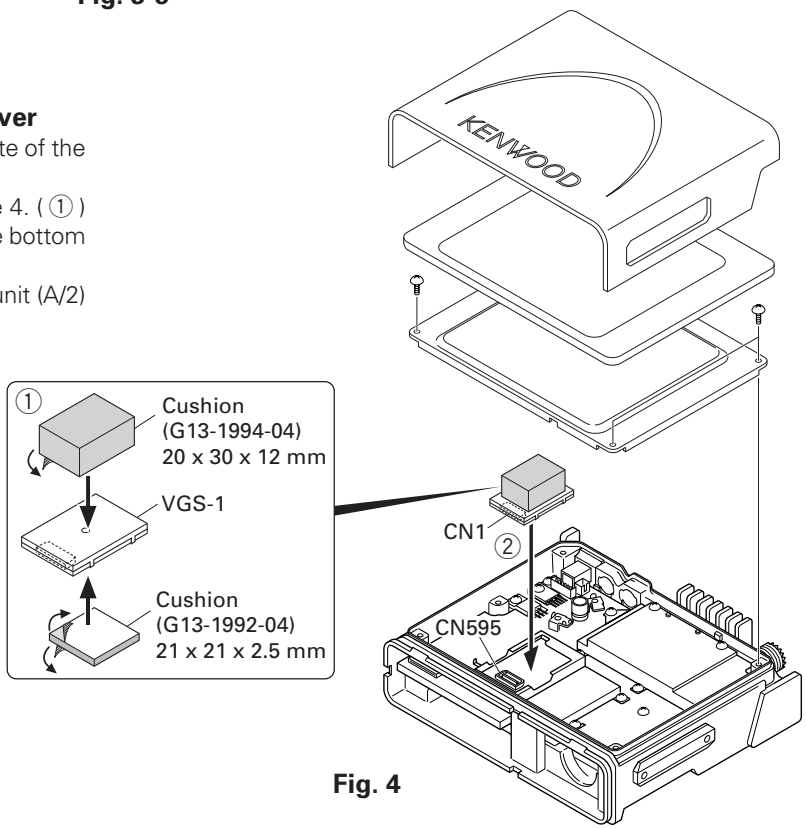

Fig. 4

INSTALLATION

5. External Speaker (Option)

5-1. KES-3

The KES-3 is an external speaker for the 3.5-mm-diameter speaker jack.

■ Connection Procedure

1. Connect the KES-3 to the 3.5-mm-diameter speaker jack on the rear of the transceiver.

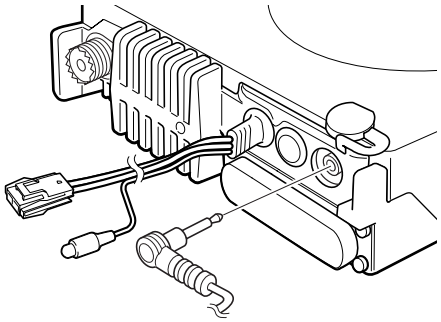

Fig. 5-1

5-2. KES-5 or KES-6

External speaker KES-5 or KES-6 can be installed for KAP-2. If KES-5 or KES-6 is installed, it can be set by changing the CN1 short pin from pins 4 and 5 to pins 5 and 6 on the KAP-2.

KAP-2 CN1 Connect	Set Up
4-5	INT. SP or KES-3
5-6	KES-5 or KES-6

When you use the KES-5 or KES-6, plug the short pin to pins 5 and 6 on the KAP-2.

When you use the INT. SP or KES-3, plug the short pin to pins 4 and 5 on the KAP-2.

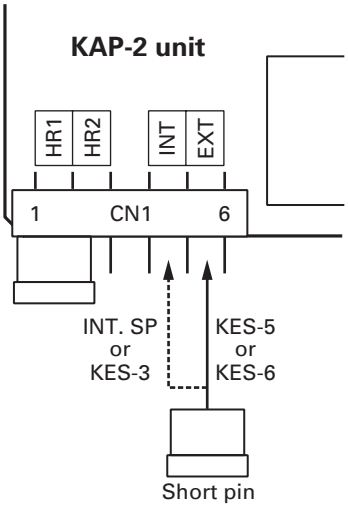

Fig. 5-2

■ Connection Procedure

Insert the crimp terminal into the Square plug supplied with the KAP-2.

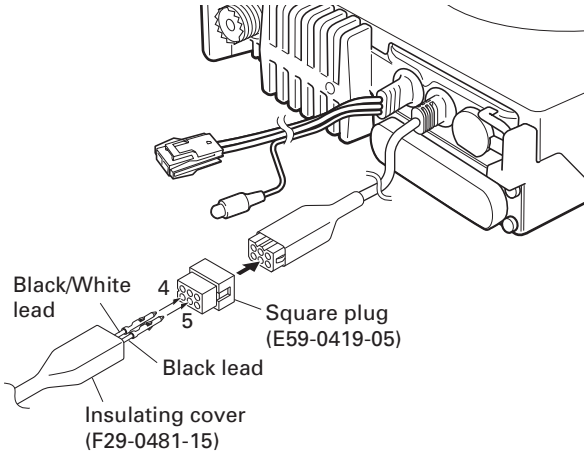

Fig. 5-3

■ KAP-2 Cable (E37-1113-15) 6-pin Connector

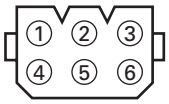

Pin No.	Color	Name
1	Red	HR2
2	Blue	GND
3	Yellow	OSP
4	Green	ESP
5	Brown	GND
6	Black	HR1

INSTALLATION

6. GPS Receiver Connection

6-1. Installing the GPS receiver

1. Remove the cabinet, top packing and shielding plate of the transceiver.
2. Remove the front panel from the transceiver.
3. Attach two cushions to the top of the GPS receiver.
4. Attach the GPS receiver to the shield case with two cushions as shown in Figure 6-2.
5. Solder each lead of the GPS receiver to a necessary location of each landing on the component side of the TX-RX unit (A/2).
6. Place the GPS antenna cable in the hollow at the rear of the chassis. (Fig. 6-2 ①)
   Note : If the GPS receiver is installed, cut the base of the convex tab of the top packing with a pair of nippers, or similar tool. (Fig. 6-3 ②)
   If the convex tab of the top packing is cut off, the water proofing property is no longer guaranteed.

Note : You must setup using the KPG-111D.

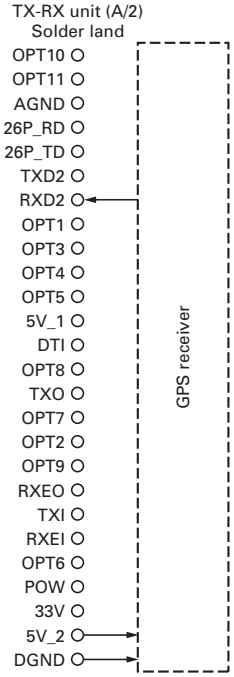

Fig. 6-1

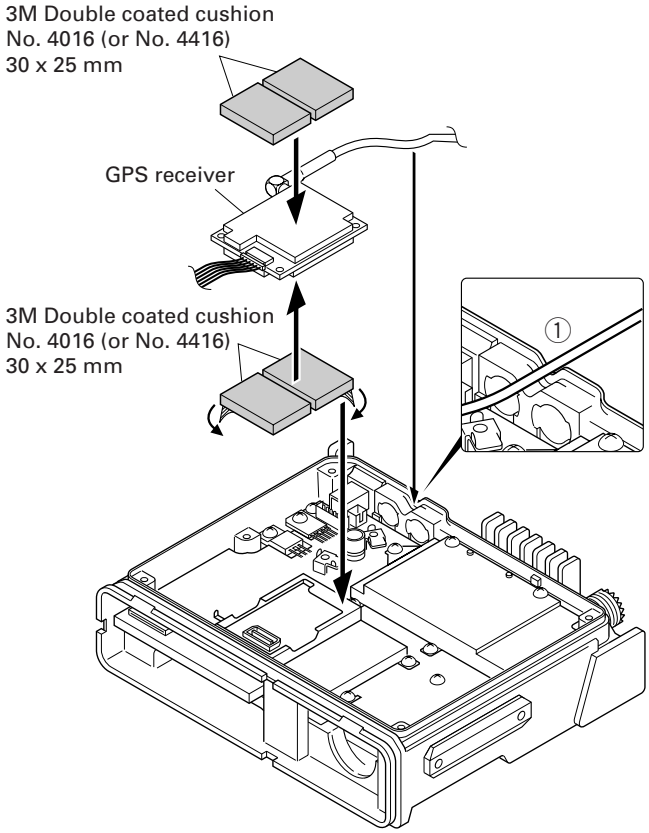

Fig. 6-2

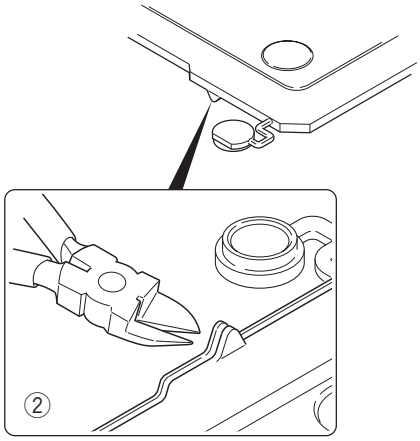

Fig. 6-3

INSTALLATION

6-2. Installing the GPS receiver together with the VGS-1

1. Remove the cabinet, top packing and shielding plate of the transceiver.
2. Remove the front panel from the transceiver.
3. Attach a cushion to the bottom of the VGS-1 as shown in Figure 6-5.
   Note : Be sure not to cover the connector with the cushion.
4. Insert the VGS-1 connector (CN1) into the TX-RX unit (A/2) connector (CN595).
5. Perform step 3 to 6 of "6-1. Installing the GPS receiver" described on page 13.

Note : You must setup using the KPG-111D.

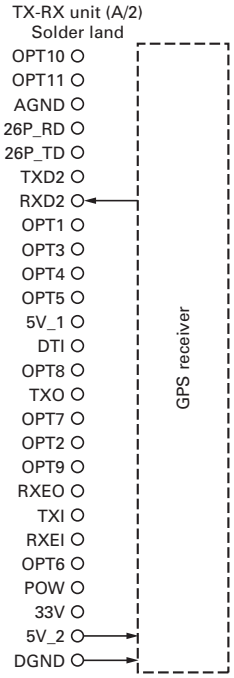

Fig. 6-4

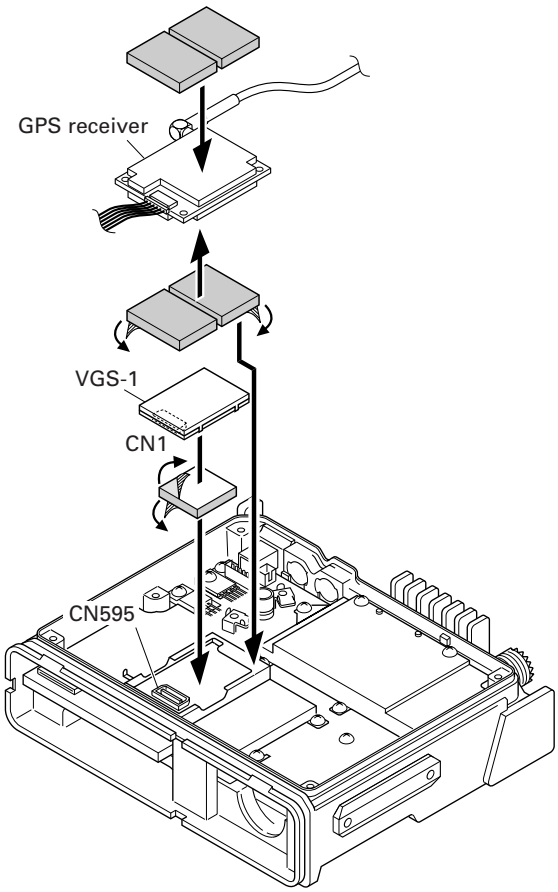

Fig. 6-5

DISASSEMBLY FOR REPAIR

1. Precautions on Disassembly

■ TX-RX PCB (TX-RX unit A/2) Disassembly

1. Remove all screws and antenna terminals on the TX-RX PCB.
2. Rotate the bush of the power supply cable 90 degrees counterclockwise as viewed from the rear of the chassis (①) and remove the power supply cable from the chassis (②).
3. When the speaker phone jack is pushed up, using your finger, from the rear of the chassis (③), the TX-RX PCB is removed from the chassis.
   Note : The TX-RX PCB and D-sub PCB (TX-RX unit B/2) are connected with a flat cable. Remove them carefully.
4. Turn the TX-RX PCB over and remove the flat cable from the connector (CN600). (④)
5. Remove the TX-RX PCB from the chassis.

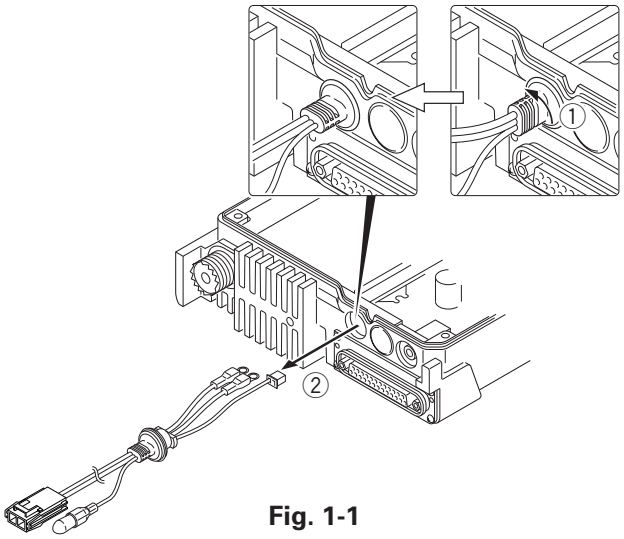

Fig. 1-1

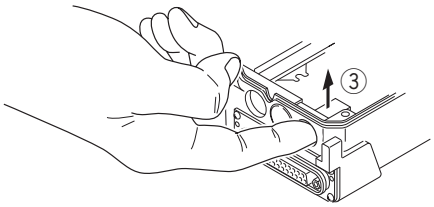

Fig. 1-2

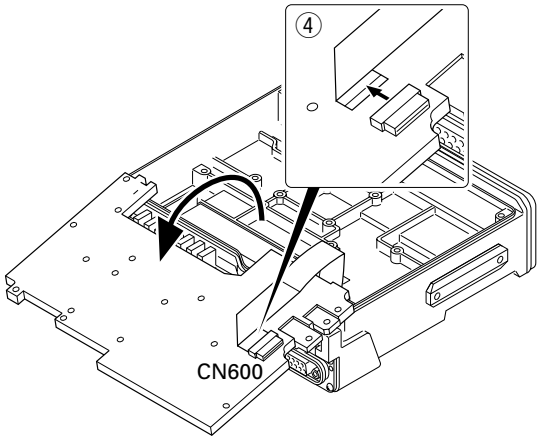

Fig. 1-3

■ Removing the speaker hardware fixture (J21-8481-03) and holder (J19-5485-02)

1. Remove the speaker lead from the holder hook. (①)
2. Remove the speaker connector from the display unit connector (CN902). (②)
3. When removing the speaker hardware fixture, insert a flat-head screwdriver at the position shown in Figure 2-1 and tilt it in the direction shown by the arrow. (③)
4. To remove the holder, insert a flat-head screwdriver into tab of the holder and tilt it in the direction shown by the arrow. (④)

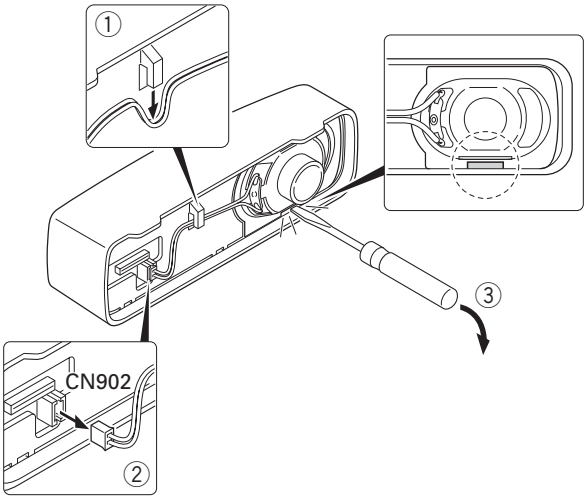

Fig. 2-1

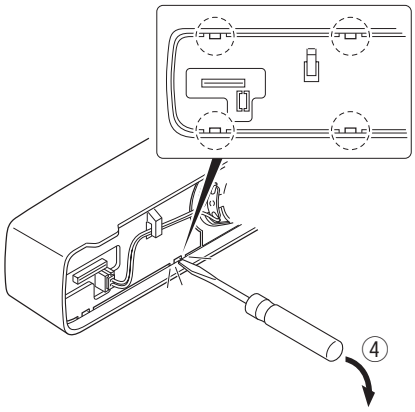

Fig. 2-2

DISASSEMBLY FOR REPAIR

2. Precautions on Reassembly

■ TX-RX PCB (TX-RX unit A/2) Reassembly

1. With the TX-RX PCB turned over, insert the flat cable from the D-sub PCB (TX-RX unit B/2) into the connector (CN600) on the TX-RX PCB.
2. Place the TX-RX PCB at its original position, tilt the TX-RX PCB and install the chassis as shown in Figure 3.

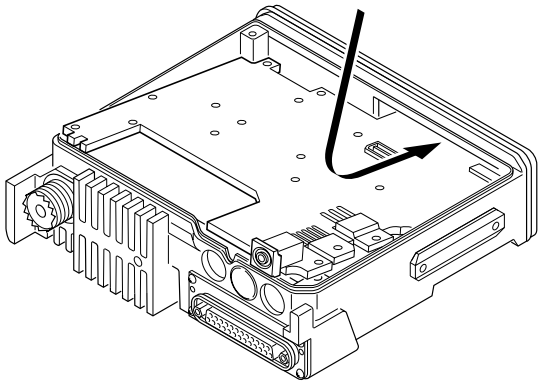

Fig. 3

■ FINAL shield case (F10-2489-03) installation procedure

1. Place the shield case on the final section of the TX-RX unit (A/2).
2. The shield case is installed on the positioning boss of the chassis by pushing down on "PUSH2" (on the shield case) while pushing "PUSH1" (stamped on two parts on the shield case) to the right.

■ Power supply cable installation procedure

1. Pass the power supply cable through the chassis hole (①) as shown in Figure 4-1 and insert the bush into the chassis hole.
2. Rotate the bush of the power supply cable 90 degrees clockwise as viewed from the rear of the chassis. (②)
3. Align the ignition sense connector (yellow) of the power supply cable around the chemical capacitor (C401) and connect it to the TX-RX unit (A/2) connector (CN403).
4. Align the + (positive) terminal of the power supply cable (red) as shown in Figure 4-2 and fix it to the terminal strip with a screw.
5. Align the – (negative) terminal of the power supply cable (black) as shown in Figure 4-2 and fix it to the terminal strip with a screw.

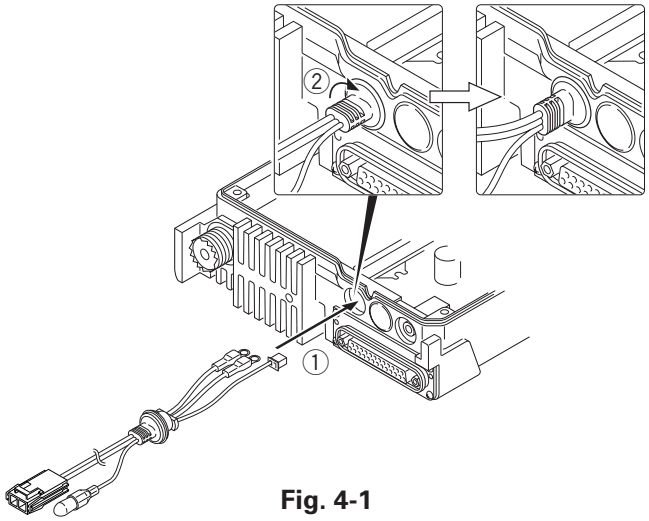

Fig. 4-1

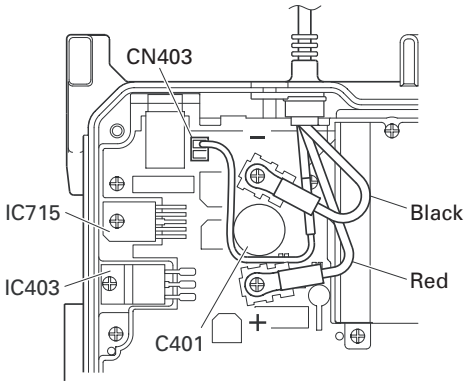

Fig. 4-2

■ Top packing installation procedure

1. Place the top packing over the shielding plate.
2. Fit the convex tab of the top packing into the hollow of the chassis. (①)
3. Fit the chassis into the groove of the top packing. (②) Verify that the top packing is in close contact with the chassis.

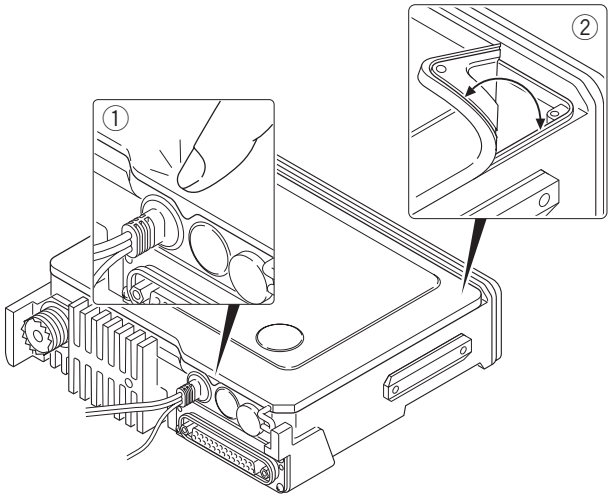

Fig. 5

DISASSEMBLY FOR REPAIR

■ D-sub cap installation procedure

To improve water resistance, fit the D-sub cap into the D-sub terminal hardware fixture of the transceiver in the following order:

1. Fit the left side (①) of the D-sub cap into the hardware fixture.
2. Fit the right side (②) of the D-sub cap into the hardware fixture.
3. Fit the center (③) of the D-sub cap into the hardware fixture.
   Verify that the D-sub cap is in close contact with the hardware fixture.

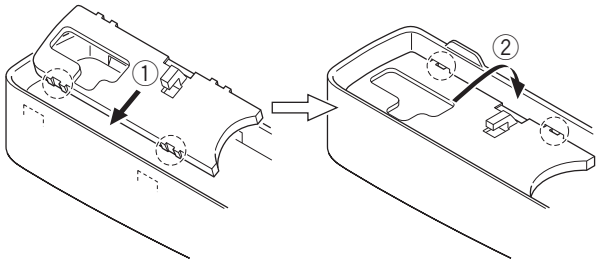

Fig. 7-1

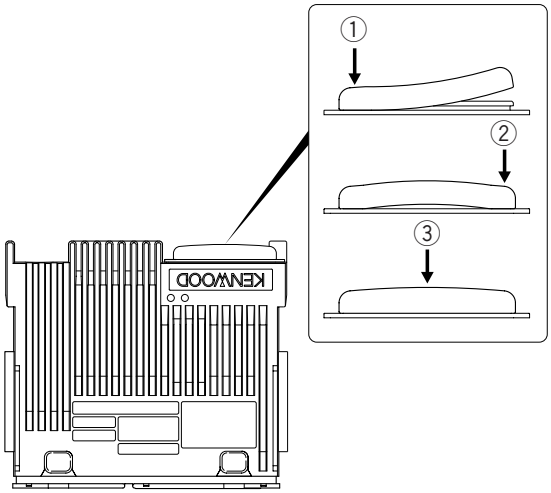

Fig. 6

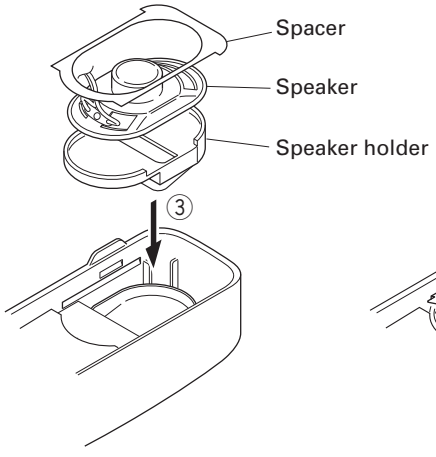

Fig. 7-2

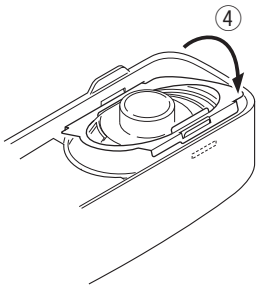

Fig. 7-3

■ Installing the holder (J19-5485-12) and speaker hardware fixture (J21-8481-03)

1. Insert two tabs of the holder (J19-5485-12) into the hollows in the top of the panel. (①)
2. Push the two tabs of the holder in on the opposite side of those in step 1 above and fit them into the hollow in the bottom of the panel. (②)
   Note : Push in the holder until it snaps in place.
3. Install the speaker holder onto the panel. (③)
   Note : To improve water resistance, fit the panel into the groove of the holder.
4. Place the speaker into the speaker holder.
   Note : The speaker must not ride on the holder rib.
5. Place the spacer on the speaker.
6. Insert the hardware fixture (J21-8481-03) into the hollow of the panel as shown in Figure 7-3, then push two parts of the hardware fixture and fit it into the hollow of the top of the panel. (Fig. 7-3 ④)
   Note : Push in the hardware fixture until it snaps in place.
7. Insert the speaker connector into the display unit connector (CN902).
8. Place the speaker lead on the holder hook.

■ Removing the lithium cell (W09-0971-05)

Insert a screwdriver to groove of one side of the socket (CN405) and pry the lithium cell up from the socket.

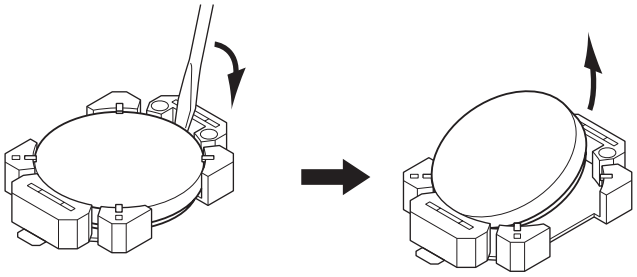

Fig. 8

■ Installing the lithium cell (W09-0971-05)

Insert a lithium cell into one side of the socket (CN405).

Push the lithium cell to insert the lithium cell into the socket.

Fig. 9

CIRCUIT DESCRIPTION

1. Overview

NX-800 is a UHF Mobile transceiver designed to operate in the frequency range of 450 to 520MHz. The unit consists of receiver, transmitter, phase-locked loop (PLL) frequency synthesizer, base band parts, power supply, and control circuits.

2. Frequency Configuration

The receiver is a double-conversion super heterodyne using first intermediate frequency (IF) of 58.05MHz and second IF of 450kHz. Incoming signals from the antenna are mixed with the local signal from the PLL circuit to produce the first IF of 58.05MHz. This is then mixed with the 57.6MHz second local oscillator output to produce the 450kHz second IF. The transmit signal frequency is generated by the PLL VCO, and modulated by the signal from the DSP. It is then amplified and fed to the antenna.

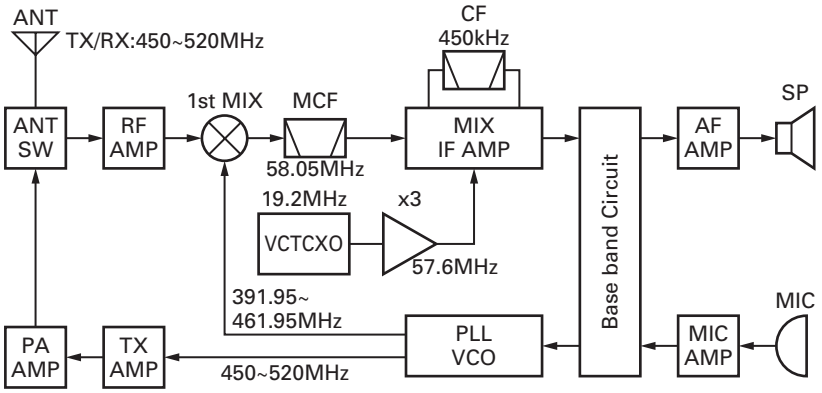

Fig. 1 Frequency configuration

3. Receiver System

3-1. RF circuit

The front-end circuit consists of former BPF (D212, D213), RF amplifier Q210, and latter BPF (D207, D208, D209 and D210).

The BPF covers frequency ranges 450 to 520MHz.

The latter BPF (D207, D208, D209 and D210) attenuates the unwanted signals, and sends only the necessary signal to the first mixer.

3-2. First Mixer

The signal from the BPF is heterodyned with the first local oscillator signal from the PLL frequency synthesizer circuit at the first mixer DBM (IC204) to become a 58.05MHz first intermediate frequency(IF) signal.

The first IF signal is fed through a monolithic crystal filter(XF202) to further remove spurious signals.

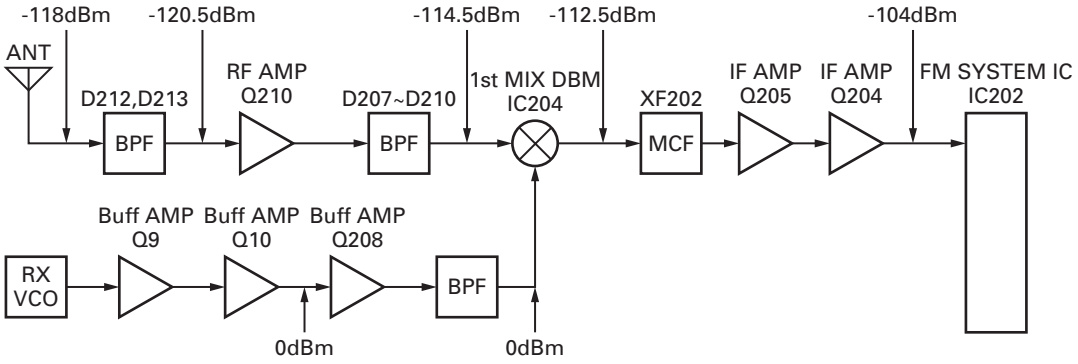

Fig. 2

CIRCUIT DESCRIPTION

3-3. IF circuit

The first IF signal is passed through a four-pole monolithic crystal filter (XF202) to reject adjacent channel signal. The filtered first IF signal is amplified by the first IF amplifier (Q204, Q205) and then applied to the IF system IC (IC202). The IF system IC provides a second mixer, AGC amplifier, and RSSI (Received Signal Strength Indicator).

The second mixer mixes the first IF signal with the 57.6MHz of second local oscillator output and produces the second IF signal of 450kHz.

The second IF signal is passed through the ceramic filter (CF201, CF202) to reject the adjacent channel signal. The filtered second IF signal is amplified by AGC amplifier.

The signal from AGC amplifier is input to AD converter (IC510) through ceramic filter (CF203) and operational amplifier (IC201 and IC704).

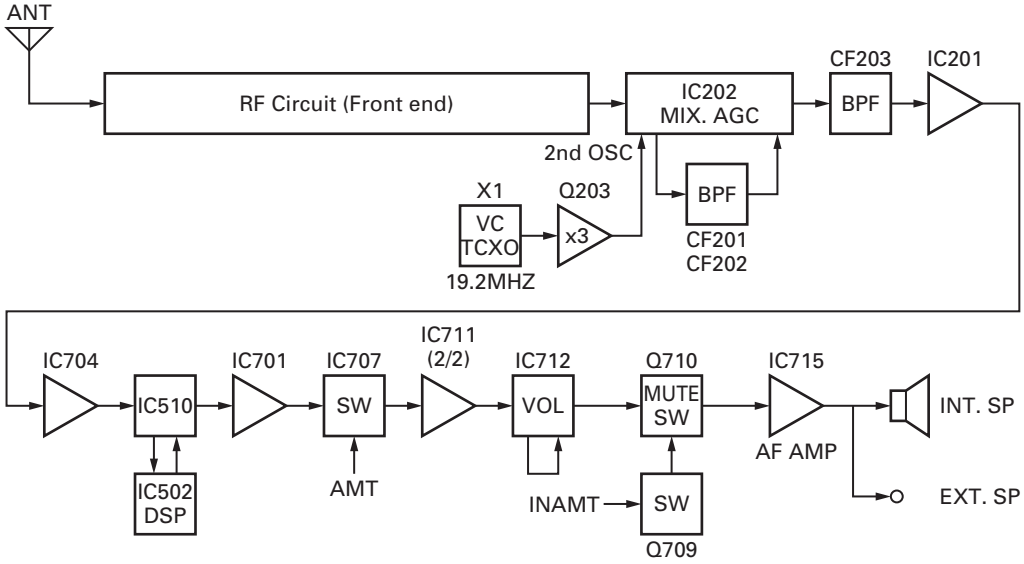

Fig. 3

3-4. Audio amplifier circuit

Audio processing (high-pass filter, low-pass filter, de-emphasized and so on) at FM mode and decoding at NXDN mode are processed by DSP. Audio signal from IC510, IC502 goes through the amplifier (IC701). The signal then goes through mute switch (IC707), amplifier (IC711), and electronic volume control (IC712).

While busy, INAMT becomes High, turn switch (Q709) on and Mute switch (Q710) off, and signal is fed to AF Power Amp (IC715). While Non-busy, INAMT is become Low, turn switch (Q709) off and Mute switch (Q710) on, then there is not AF output.

3-5. Squelch Circuit

It amplifies the demodulated noise signal from IC202 after filtering through BPF circuit. Then, the amplified signal is converted to DC signal by the detection circuit. The converted signal is fed back to IC510.

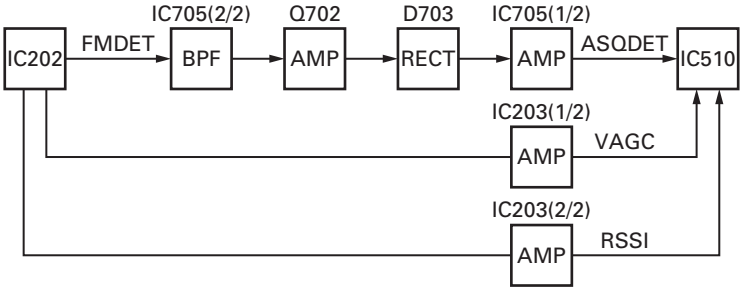

Fig. 4

CIRCUIT DESCRIPTION

4. Transmitter System

4-1. Audio Band Circuit

The signal from the microphone goes through the mute switch (Q706), the Mic-Mute signal (MM) becomes Low, then mute switch (Q706) is turned off. The signal from microphone goes through Mic-AGC (Q704, Q705, D704, D705), and goes through switch IC (IC708), and amplified by Mic-Amp IC706 (1/2), LPF IC706 (2/2) works as anti-aliasing filter.

If an optional scrambler board is installed, the switch (IC708) adjusts the signal path so that the audio signal is input to the scrambler board.

4-2. Base Band Circuit

The audio signal output from the base band circuit is converted to digital data of a sampling frequency of 48 kHz. This digital data is sent to the DSP (IC502), and voice signals of 300Hz or lower and frequencies of 3kHz or higher are cut off and an audio range 300Hz to 3kHz is extracted. The audio signal is then pre-emphasized in FM mode and synthesized with the signals, such as QT and DQT, as required, and is then output from the IC510. In Digital mode, the audio signal is converted to the 4-Level FSK base band signal and output from the IC510. The DTMF and MSK base band signals are also generated by the DSP and output by the IC510.

LPF (IC702) works as smoothing filter. The DAC (IC712) assigns the base band signal to the VCO and VCTCXO (X1). At this time, the level output according to the transmit carrier is fine-adjusted according to each modulation method.

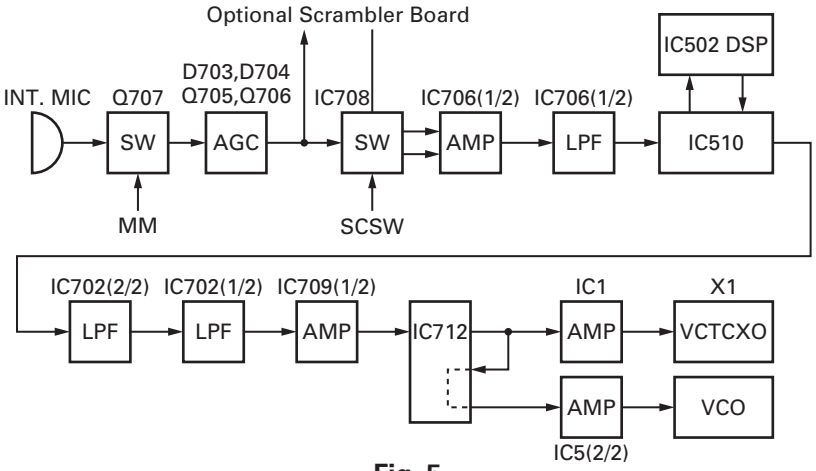

Fig. 5

4-3. Drive and Final amplifier

The transmit signal obtained from the TX VCO buffer amplifier Q9, is amplified to approximately +17dBm by the driver amplifiers Q10, Q101 and Q102.

This amplified signal is passed to the power amplifier module(power module)IC102, which consists of a MOS-FET amplifier and capable of transmission output power.

4-4. APC circuit

The Automatic transmission power control (APC) circuit stabilizers the transmitter output power at a predetermined level by detecting the power module output with a diodes D108, D109 and D110. Diodes D108, D109 and D110 apply a voltage to DC amplifier IC103 (1/2).

IC103 (2/2) compares the APC control voltage (PC) generated by microprocessor IC510 and DC amplifier IC101 (1/2, 2/2) with the detection output voltage from IC103 (1/2) to control the Vgg Pin of IC102, and stabilizes transmission output.

The APC circuit is configured to protect over-current of the power module due to fluctuations of the load at the antenna end and to stabilize transmission output at voltage and temperature variations.

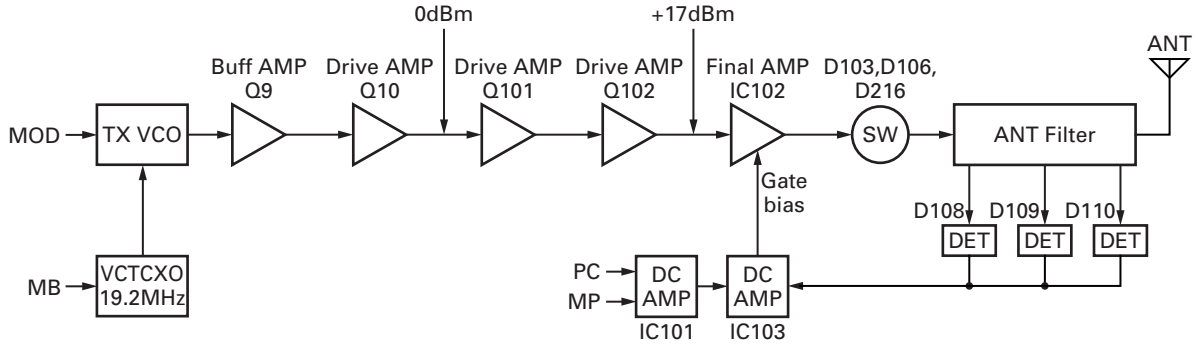

Fig. 6

CIRCUIT DESCRIPTION

5. PLL Frequency Synthesizer

5-1. VCTCXO (X1)

VCTCXO (X1) generates a reference frequency of 19.2MHz for the PLL frequency synthesizer. This reference frequency is applied to pin 9 of the PLL IC (IC3) and connected to IF circuit as a 2nd local signal through Tripler. The VCTCXO oscillation frequency is determined by DC voltage of VC terminal. The VC voltage is fixed to 1.65V by R1 and R2, and supplied to VC terminal through IC2. Modulation signal is also fed to VC terminal through IC2.

The frequency adjustment is achieved by switching the ratio of dividing frequency that is not adjusted by the DC voltage impressed to VC. The resolution of adjusting frequency is approximately 4Hz.

5-2. VCO

There is a RX VCO and a TX VCO.

The TX VCO (Q6) generates a transmit carrier and the RX VCO (Q5) generates a 1st local signal. For the VCO oscillation frequency, the transmit carrier is 450 to 520 MHz and the 1st local signal is 391.95 to 461.95MHz.

The VCO oscillation frequency is determined by one system of operation switching terminal "T/R" and two systems of voltage control terminals "C/V" and "V-assist".

The operation switching terminal, "T/R", is controlled by the control line (/T_R) output from the CPU (IC510). When the /T_R logic is low, the VCO outputs the transmit carrier and when it is high, it outputs a 1st local receive signal.

The voltage control terminals, "CV" and "V-assist", are controlled by the PLL IC (IC3) and CPU (IC510) and the output frequency changes continuously according to the applied voltage. For the modulation input terminal, "VCO MOD", the output frequency changes according to the applied voltage. This is used to modulate the VCO output. "VCO MOD" works only when "/T_R" is low.

5-3. PLL IC (IC3)

PLL IC compares the differences in phases of the VCO oscillation frequency and the VCTCXO reference frequency, returns the difference to the VCO CV terminal and realizes the "Phase Locked Loop" for the return control. This allows the VCO oscillation frequency to accurately match (lock) the desired frequency.

When the frequency is controlled by the PLL, the frequency convergence time increases as the frequency difference increases when the set frequency is changed. To supplement this, the CPU is used before control by the PLL IC to bring the VCO oscillation frequency close to the desired frequency. As a result, the VCO CV voltage does not change and is always stable at approx. 3.0V.

The desired frequency is set for the PLL IC by the CPU (IC510) through the 3-line "SDO1", "SCK1", "PCS_RF" serial bus. Whether the PLL IC is locked or not is monitored by the CPU through the "PLD" signal line. If the VCO is not the desired frequency (unlock), the "PLD" logic is low.

5-4. Local Switch (D101, D205)

The connection destination of the signal output from the buffer amplifier (Q10) is changed with the diode switch (D101) that is controlled by the transmission power supply, 80T, and the diode switch (D205) that is controlled by the receive power supply, 50R. If the 80T logic is high, it is connected to a send-side pre-drive (Q101). If the 80T logic is low, it is connected to a local amplifier (Q208).

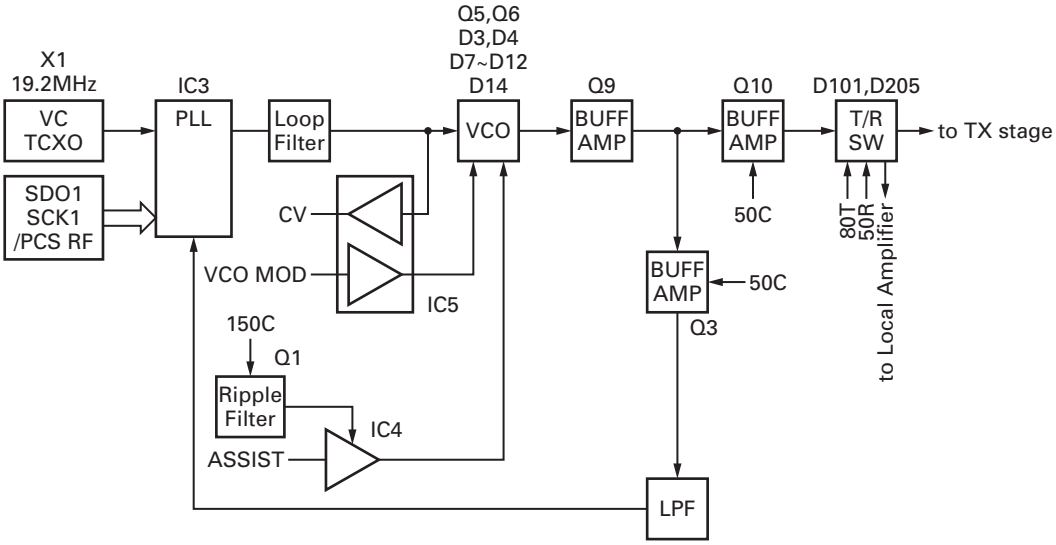

Fig. 7

CIRCUIT DESCRIPTION

6. Control Circuit

The control circuit consists of CPU (IC510) and its peripheral circuits. IC510 mainly performs the following;

1) Switching between transmission and reception by PTT signal input.
2) Reading system, zone, frequency, and program data from the memory circuit.
3) Sending frequency program data to the PLL.
4) Controlling squelch on/off by the DC voltage from the squelch circuit.
5) Controlling the audio mute circuit by decode data input.

6-1. CPU

The CPU (IC510) is 32bit RISC processor, equipped with peripheral function and ADC/DAC.

This CPU operates at 18.432MHz clock and 3.3V /1.5V DC. Controls the flash memory, SRAM, DSP, the receive circuit, the transmitter circuit, the control circuit, and the display circuit and transfers data to or from an external device.

6-2. Memory Circuit

Memory circuit consists of the CPU (IC510) and the SRAM (IC503), the flash memory (IC501). The flash memory has capacity of 32Mbit that contains the transceiver control program for the CPU and stores the data. It also stores the data for transceiver channels and operating parameter that are written by the FPU. This program can be easily written from external devices. The SRAM has capacity of 1Mbit that contains work area and data area.

■ Flash memory

Note: The flash memory stores the data that is written by the FPU (KPG-111D), tuning data (Deviation, Squelch, etc.), and firmware program.

■ SRAM (static memory)

Note: The SRAM has temporary data area and work area. When the power supply is off, it is backed up by an internal secondary lithium battery. Therefore, the save data does not break.

■ Real-time clock

The clock function is based on real-time clock IC (IC504). When the power supply is off, it is backed up by an internal secondary lithium battery

6-3. Display Unit

The display unit is composed of the CPU (IC911) and the memory IC (IC913), and the LCD & Key backlight etc.

The LCD Ass'y (with LCD Driver) is controlled using the bus lines on the connector (CN905) of the display unit. It corrects the LCD contrast voltage using IC909.

6-4. Key Detection Circuit

Keys are detected using Key scan circuit in IC911. The /KI* and KO* signals that are normally pulled up go low when any key is pressed.

6-5. DSP

The DSP circuit consists of a DSP (IC502) and processes the base band signal. The DSP operates on an external clock of 18.432MHz (the same as the IC510), the I/O section operates at 3.3V and the core section operates at 1.5V. The DSP carries out the following processes:

- 4Level FSK processing
- Analog FM pre-emphasis/de-emphasis
- Vocoder processing between audio codec and modulation/demodulation
- CAI processing, such as error correction encoding
- QT/DQT encoding/decoding
- DTMF encoding/decoding
- MSK encoding/decoding
- 2TONE encoding/decoding
- Compressor/expander processing
- Voice scrambler processing
- Transmit/receive audio filtering processing
- Microphone amplifier AGC processing
- Audio mute processing
- Modulation level processing

7. Power Supply Circuit

+B is connected to Final amplifier and DC/DC converter IC (IC405). IC405 regulates +B voltage to 5.0V (50M). 50M operates whenever +B is supplied. IC402 (33M), IC408 (33A) and IC409 (15M) are enabled while the 50M are operating.

33M and 15M provide the power to CPU, DSP, and Flash memory. At this time CPU starts working. Voltage detector IC (IC401) watches +B voltage. If +B voltage is higher than 8.6V, IC401 (/BINT) outputs High. If the /BINT signal is high, Q404 (SB SW) is turned on by SBC signal from CPU. (High : SB=ON, Low : SB=OFF). When the SB is turned on, IC403 (80C), IC404 (50C), IC406 (33C), IC407 (33GPS) and IC410 (150C) start working. Q416 and Q412 are controlled by SBC signal. If the SBC signal becomes High, Q416 (33A-2) operates and Q412 (50MC SW) are turned on.

The CPU controls the TXC signal to High during transmission to supply power (80T) for transmission circuit. The CPU controls the signals (RXC) to High during reception to supply power (80R, 50R) for reception circuit.

When the CPU detects the PSW (Power switch) signal, IGN (Ignition sense) signal or /BINT signal, it controls the SBC signal to Low, and turns the transceiver power (SB) off. When D401 and Q401 detect over-voltage condition, they turns Q404 (SB SW) off. But the CPU still works.

If +B is not provided to the transceiver, the power is provided to SRAM and RTC through the secondary battery connected with CN405.

CIRCUIT DESCRIPTION

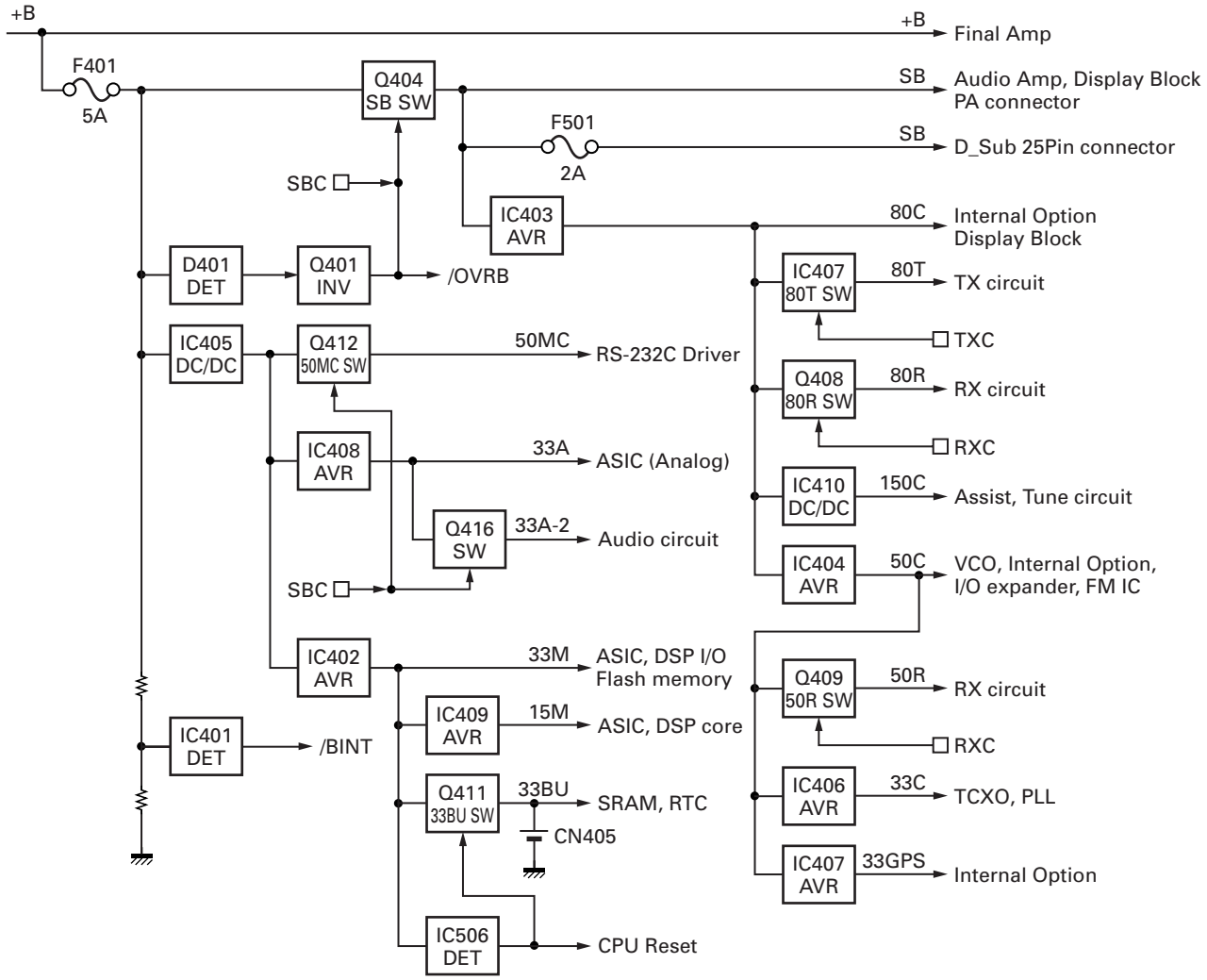

Fig. 8

8. Signaling Circuit

8-1. Encode (QT/DQT/DTMF/MSK/2TONE)

Each signaling data signal of QT, DQT, DTMF and MSK is generated by the DSP circuit, superposed on a modulation signal and output from IC510. The modulation balance of the QT/DQT signal is adjusted by the D/A converter (IC712) and the resulting signal is routed to the modulation input of the VCO and VCTCXO (X1). The each deviation of the TX QT, DQT, DTMF and MSK tone is adjusted by changing the output level of the IC510 and the resulting signal is routed to VCO and VCXO. The RX DTMF tone is routed to the receive audio signal system, and is output from the speaker.

8-2. Decode (QT/DQT/DTMF/2TONE/MSK)

The audio signal is removed from the FM detection signal sent to the DSP circuit and the resulting signal is decoded.

9. Compander Circuit

The term “compander” means compressor and expander. The compander reduces noise by utilizing a compressor and an expander. The NX-800 contains DSP (IC502) to perform this operation. The NX-800 compander can be turned on or off using the FPU.

COMPONENTS DESCRIPTION

Display unit (X54-3640-10)

Ref. No.	Part Name	Description
IC901	MOS-IC	AFO/BLC SW
IC902	MOS-IC	AF Buffer AMP (AFO)
IC903	MOS-IC	Voltage regulator (5C)
IC904	MOS-IC	Voltage regulator (33C)
IC905	MOS-IC	Bus Buffer (TXD0)
IC906	MOS-IC	DC/DC Converter (N100C)
IC907	MOS-IC	Dual Bus Buffer (RXD0/RXD1)
IC908	MOS-IC	AND Gate (TXD1/RXD0)
IC909	MOS-IC	Buffer AMP (LCD Contrast ADJ)
IC910	MOS-IC	Bus Buffer (D0-D7)
IC911	MOS-IC	MCU
IC912	MOS-IC	Bus Buffer (A1-A2)
IC913	ROM IC	Flash ROM
Q901	FET	AFO SW
Q902	TRANSISTOR	HK/RXD0 SW
Q904	TRANSISTOR	HK/RXD0 SW
Q905	TRANSISTOR	TX/RX LED (TX)
Q906	TRANSISTOR	TX/RX LED (BUSY)
Q908	TRANSISTOR	LCD BACK LIGHT SW
Q909	TRANSISTOR	DIMER SW (LCD BACK LIGHT)
Q910	TRANSISTOR	LCD BACK LIGHT SW
Q911	FET	DIMER SW (LCD BACK LIGHT)
Q913	FET	LCD RESET SW
D901	VARISTOR	Surge absorption (DM/KVL)
D902	VARISTOR	Surge absorption (HK/RXD)
D903	ZENER DIODE	OVER DC Supply protection
D904	VARISTOR	Surge absorption (BLC/AFO)
D906	VARISTOR	LINE protection (SB)
D907	ZENER DIODE	OVER DC Supply protection
D908	DIODE	KEY MATRIX
D910	DIODE	Reverse Current Prevention (HK/RXD)
D911,912	DIODE	KEY MATRIX
D913	DIODE	LINE protection (PTT/TXDO)
D914	LED	TX/RX LED
D915~926	LED	LCD BACK LIGHT
D927~936	LED	KEY BACK LIGHT
D937	DIODE	LEVEL SHIFT (PRST)

TX-RX unit (X57-7390-10) : NX-800

Ref. No.	Part Name	Description
IC1	MOS-IC	Temp sensor
IC2	MOS-IC	Buffer AMP (TCXO modulation)
IC3	MOS-IC	PLL IC
IC4	MOS-IC	Buffer AMP (VCO tune)
IC5	MOS-IC	VCO modulation/Buffer AMP (CV)
IC101	MOS-IC	Auto Power Control
IC102	MOS-IC	Final AMP (RF Power Module)
IC103	MOS-IC	Auto Power Control
IC201	MOS-IC	Buffer AMP (2nd IF DET)
IC202	ANALOGUE IC	IF IC
IC203	MOS-IC	Buffer AMP (RSSI/VAGC)
IC204	MOS-IC	1st Mixer
IC205	MOS-IC	Buffer AMP (BPF tune)
IC206	MOS-IC	Buffer AMP (BPF tune)
IC401	MOS-IC	Voltage Detector (BINT)
IC402	MOS-IC	Voltage regulator (33M)
IC403	MOS-IC	Voltage regulator (80C)
IC404	MOS-IC	Voltage regulator (50C)
IC405	ANALOGUE IC	DC/DC Converter (50M)
IC406	BI-POLAR IC	Voltage regulator (33C)
IC407	MOS-IC	Voltage regulator (33GPS)
IC408	MOS-IC	Voltage regulator (33A)
IC409	MOS-IC	Voltage regulator (15M)
IC410	ANALOGUE IC	DC/DC Converter (150C)
IC501	ROM IC	FLASH ROM
IC502	MCU	DSP(BGA)
IC503	SRAM IC	SRAM(BGA)
IC504	MOS-IC	RTC
IC505	MOS-IC	DELAY
IC506	MOS-IC	RESET(CPU)
IC507	MOS-IC	Bus Buffer (BFSX2)
IC508	MOS-IC	Buffer AMP (18.432MHz)
IC509	MOS-IC	Bus Buffer (BER CLK/BER DATA)
IC510	MOS-IC	MCU (BGA)
IC511	MOS-IC	AND (PCS_RF/HD2)
IC512	MOS-IC	LEVEL SHIFT (AND ITXD1/SCTXD)
IC513	MOS-IC	Buffer AMP (TXD2)
IC514	MOS-IC	LEVEL SHIFT (I2CCK/I2CDT)
IC515	MOS-IC	LEVEL SHIFT (TXDO/RTSO)

COMPONENTS DESCRIPTION

Ref. No.	Part Name	Description
IC516	MOS-IC	LEVEL SHIFT (RXDO/CTSO)
IC517	MOS-IC	I/O EXPANDER
IC518	MOS-IC	RS-232C Driver
IC701	MOS-IC	LPF (RXAF)
IC702	MOS-IC	LPF (MOD)
IC703	MOS-IC	LPF (APC/DEO)
IC704	MOS-IC	Buffer AMP (2nd IF DET)
IC705	MOS-IC	BRF/Buffer AMP (SQ)
IC706	MOS-IC	LPF/SUM AMP
IC707	MOS-IC	RXAF/RXEI SW
IC708	MOS-IC	AF SW(TXO/TXI)
IC709	MOS-IC	SUM AMP (AI/TONE/MI1 MI2) / (MOD/DI)
IC710	MOS-IC	AF SW (AI TONE OPT9/VREF)
IC711	MOS-IC	SUM AMP (AF) / VREF
IC712	MOS-IC	DAC
IC713	MOS-IC	AO SW
IC714	MOS-IC	AFO Buffer
IC715	ANALOGUE IC	AF Power AMP
Q1	TRANSISTOR	Ripple filter
Q3	TRANSISTOR	Buffer AMP (PLL Fin)
Q4	TRANSISTOR	Ripple filter
Q5,6	FET	VCO
Q7,8	FET	T/R SW (VCO)
Q9	TRANSISTOR	Buffer AMP (VCO)
Q10	TRANSISTOR	Buffer AMP (RF)
Q11	FET	Buffer AMP (19.2MHz)
Q101	TRANSISTOR	RF Pre-Drive AMP
Q102	TRANSISTOR	RF Drive AMP
Q105	TRANSISTOR	SW (RF Pwer H/L)
Q106	FET	SW (RF Pwer H/L)
Q201	TRANSISTOR	SW (W/N)
Q202	TRANSISTOR	SW (W/N)
Q203	TRANSISTOR	2nd Local buffer AMP (X3)
Q204	TRANSISTOR	1st IF AMP
Q205	TRANSISTOR	1st IF AMP
Q208	TRANSISTOR	Buffer AMP (Local)
Q210	TRANSISTOR	LNA
Q212	TRANSISTOR	SW (W/N)
Q401	TRANSISTOR	SW (OVER DC Supply protection)

Ref. No.	Part Name	Description
Q402	TRANSISTOR	DC SW (SB)
Q403	TRANSISTOR	DC SW (IGN)
Q404	FET	DC SW (SB)
Q405	TRANSISTOR	DC SW (SCTAM1)
Q406	FET	DC SW (33BU)
Q407	TRANSISTOR	DC SW (80T)
Q408	TRANSISTOR	DC SW (80R)
Q409	TRANSISTOR	DC SW (50R)
Q410	TRANSISTOR	DC SW (50MC)
Q411	TRANSISTOR	DC SW (33BU)
Q412	TRANSISTOR	DC SW (50MC)
Q413	TRANSISTOR	DC SW (80T)
Q414	TRANSISTOR	DC SW (80R)
Q415	TRANSISTOR	DC SW (50R)
Q416	FET	DC SW (33A-2)
Q417	FET	DC SW
Q501	FET	DC SW
Q701	FET	SW (W/N)
Q702	TRANSISTOR	Noise AMP
Q703	FET	TONE SW
Q704	TRANSISTOR	LIMIT
Q705	TRANSISTOR	LIMIT
Q706	FET	MUTE (MI1)
Q707	FET	MUTE (MI2)
Q708	TRANSISTOR	OPT10 SW
Q709	TRANSISTOR	DC SW
Q710	TRANSISTOR	AF MUTE
Q901,902	TRANSISTOR	DC SW (AUXO1, AUXO2)
D2	DIODE	Bypass diode
D3,4	VARIABLE CAPACITANCE DIODE	Frequency control
D7~12	VARIABLE CAPACITANCE DIODE	Frequency control
D14	VARIABLE CAPACITANCE DIODE	TX modulation
D21	DIODE	2nd Local SW
D101	DIODE	T/R SW
D102	ZENER DIODE	PM DRAIN BAIAS protection
D103	DIODE	Antenna switch
D106	DIODE	Antenna switch

COMPONENTS DESCRIPTION

Ref. No.	Part Name	Description
D108~10	DIODE	Power Det
D201,202	DIODE	CF SW (W/N)
D205	DIODE	T/R SW
D207~210	VARIABLE CAPACITANCE DIODE	Vari-Cap tune
D212,213	VARIABLE CAPACITANCE DIODE	Vari-Cap tune
D216	DIODE	Antenna switch
D401	ZENER DIODE	OVER DC Supply protection
D403	DIODE	Reverse Current Prevention
D404	VARISTOR	Surge absorption
D405	DIODE	Reverse protection
D406	DIODE	Reverse Current Prevention (BLVL)
D407	DIODE	DC/DC Converter (50M)
D408	DIODE	Reverse Current Prevention (OR 33M/SBC_2)
D409	DIODE	DC/DC Converter (50M)
D410	DIODE	Reverse Current Prevention (Buck UP Battery)
D411	DIODE	Reverse Current Prevention (33BU)
D412	DIODE	Discharge (33H, 33A, CE)
D501,502	DIODE	Line protection
D503	DIODE	Reverse Current Prevention (PCS_RF)
D504	DIODE	Reverse Current Prevention (RXD)
D506	DIODE	Reverse Current Prevention (OR G_RXD2)
D507	DIODE	Reverse Current Prevention (OR RXD2)
D508	DIODE	Line protection
D509,510	DIODE	Reverse Current Prevention
D511	DIODE	Line protection (RXD2)
D512	DIODE	Line protection (AUXIO9)
D702	DIODE	SQ Voltage Control
D703	DIODE	Noise Detector (SQ)
D704	DIODE	AF Detector (LIMIT)
D705	DIODE	AF Detector (LIMIT)
D706	ZENER DIODE	Line protection (DI)
D707	ZENER DIODE	Line protection (DEO)
D901	DIODE	Line protection (BER CK)
D902	DIODE	Line protection (BER DT)

Ref. No.	Part Name	Description
D903	DIODE	Line protection (AUXIO1)
D904	DIODE	Line protection (AUXIO2)
D905,906	ZENER DIODE	OVER DC Supply protection
D907	DIODE	Line protection (AUXIO3)
D908	DIODE	Line protection (AUXIO4)
D909	DIODE	Reverse Current Prevention (SB)
D910	ZENER DIODE	OVER DC Supply protection
D911	DIODE	Line protection (AUXIO8)
D912	DIODE	Line protection (AUXIO5)
D913	DIODE	Reverse Current Prevention (SB)
D914	ZENER DIODE	OVER DC Supply protection

PARTS LIST

CAPACITORS

CC 45 TH 1H 220 J
1 2 3 4 5 6

1 = Type ... ceramic, electrolytic, etc.
2 = Shape ... round, square, ect.
3 = Temp. coefficient
4 = Voltage rating
5 = Value
6 = Tolerance

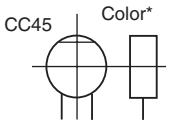

· Capacitor value

010 = 1pF
100 = 10pF
101 = 100pF
102 = 1000pF = 0.001μF
103 = 0.01μF

2 2 0 = 22pF
Multiplier
2nd number
1st number

· Temperature coefficient

1st Word	C	L	P	R	S	T	U
Color*	Black	Red	Orange	Yellow	Green	Blue	Violet
ppm/℃	0	-80	-150	-220	-330	-470	-750

2nd Word	G	H	J	K	L
ppm/℃	±30	±60	±120	±250	±500

Example : CC45TH = -470 ± 60ppm/℃

· Tolerance (More than 10pF)

Code	C	D	G	J	K	M	X	Z	P	No code
(%)	±0.25	±0.5	±2	±5	±10	±20	+ 40 - 40	+ 80 - 20	+ 100 -0	More than 10μF -10 ~ +50 Less than 4.7μF -10 ~ +75

(Less than 10pF)

Gode	B	C	D	F	G
(pF)	±0.1	±0.25	±0.5	±1	±2

· Voltage rating

1st word \ 2nd word	A	B	C	D	E	F	G	H	J	K	V
0	1.0	1.25	1.6	2.0	2.5	3.15	4.0	5.0	6.3	8.0	-
1	10	12.5	16	20	25	31.5	40	50	63	80	35
2	100	125	160	200	250	315	400	500	630	800	-
3	1000	1250	1600	2000	2500	3150	4000	5000	6300	8000	-

· Chip capacitors

(EX) C C 7 3 F S L 1 H 0 0 0 J
1 2 3 4 5 6 7
(Chip)(CH,RH,UJ,SL)

(EX) C K 7 3 F F 1 H 0 0 0 Z
1 2 3 4 5 6 7
(Chip)(B,F)

Refer to the table above.
1 = Type
2 = Shape
3 = Dimension
4 = Temp. coefficient
5 = Voltage rating
6 = Value
7 = Tolerance

Dimension (Chip capacitors)

Dimension code	L	W	T
Empty	5.6 ±0.5	5.0 ±0.5	Less than 2.0
A	4.5 ±0.5	3.2 ±0.4	Less than 2.0
B	4.5 ±0.5	2.0 ±0.3	Less than 2.0
C	4.5 ±0.5	1.25 ± 0.2	Less than 1.25
D	3.2 ±0.4	2.5 ±0.3	Less than 1.5
E	3.0 ±0.2	1.6 ±0.2	Less than 1.25
F	2.0 ±0.3	1.25 ± 0.2	Less than 1.25
G	1.6 ±0.2	0.8 ±0.2	Less than 1.0
H	1.0 ±0.05	0.5 ±0.05	0.5 ±0.05

RESISTORS

· Chip resistor (Carbon)

(EX) R D 7 3 E B 2 B 0 0 0 J
1 2 3 4 5 6 7
(Chip)(B,F)

Dimension

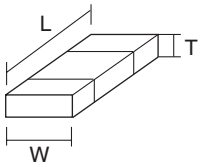

· Carbon resistor (Normal type)

(EX) R D 1 4 B B 2 C 0 0 0 J
1 2 3 4 5 6 7

1 = Type
2 = Shape
3 = Dimension
4 = Temp. coefficient
5 = Rating wattage
6 = Value
7 = Tolerance

Dimension (Chip resistor)

Dimension code	L	W	T
E	3.2 ±0.2	1.6 ±0.2	1.0
F	2.0 ±0.3	1.25±0.2	1.0
G	1.6 ±0.2	0.8 ±0.2	0.5 ±0.1
H	1.0 ±0.05	0.5 ±0.05	0.35 ±0.05

Rating wattage

Code	Wattage	Code	Wattage	Code	Wattage
1J	1/16W	2C	1/6W	3A	1W
2A	1/10W	2E	1/4W	3D	2W
2B	1/8W	2H	1/2W		

NX-800

PARTS LIST

∗ New Parts. ⚠ indicates safety critical components.
Parts without **Parts No.** are not supplied.
Les articles non mentionnes dans le **Parts No.** ne sont pas fournis.
Teile ohne **Parts No.** werden nicht geliefert.

L: Scandinavia **K**: USA **P**: Canada
Y: PX (Far East, Hawaii) **T**: England **E**: Europe
Y: AAFES (Europe) **X**: Australia **M**: Other Areas

NX-800 (Y51-5150-XX)
DISPLAY UNIT (X54-3640-10)

Ref. No.	Address	New parts	Parts No.	Description	Destination
NX-800					
1	1B		A01-2194-11	METALLIC CABINET	
4	3A	∗	A62-1162-03	PANEL ASSY	
5	2A		B09-0681-03	CAP(KAP-2)	
7	-	∗	B11-1850-04	FILTER(LCD)	
8	3B	∗	B38-0922-05	LCD ASSY	
11	3A		B42-7296-04	STICKER(NEXEDGE)	
18	1D	∗	B62-2000-00	INSTRUCTION MANUAL	
20	2B		E04-0167-15	RF COAXIAL RECEPTACLE(M)	
21	2B		E30-7520-15	DC CORD(PIG TAIL)	
22	2C		E30-7523-35	DC CORD ASSY ACCESSORY	
23	2A		E37-1118-05	LEAD WIRE WITH CONNECTOR(SHORT CABLE)	
24	3B		E37-1124-05	LEAD WIRE WITH CONNECTOR(2P/SP)	
25	2A		E37-1378-05	FLAT CABLE(30P/D-SUB)	
26	2A		E37-1379-05	FLAT CABLE(30P/PANEL)	
27	2B		F10-2488-12	SHIELDING PLATE(CHASSIS)	
28	1A		F10-2489-13	SHIELDING CASE(FINAL)	
29	1A		F10-2490-13	SHIELDING CASE(VCO)	
30	2C		F52-0024-05	FUSE(BLADE TYPE)15A/32V	
31	-		G10-1322-04	FIBROUS SHEET(PANEL-SP)	
32	2B,3B		G10-1342-04	FIBROUS SHEET(BIRITSUKI)	
33	-		G11-4336-04	SHEET(PANEL-FG)	
34	1B		G11-4343-04	SHEET(STEP)	
35	1A		G13-2018-04	CUSHION(FINAL)	
36	2B		G13-2047-04	CUSHION(DC SCREW)	
65	2B		G13-2262-04	CUSHION(FPC)	
37	1B		G53-1613-11	PACKING(SHIELDPLATE)	
38	1A		G53-1616-03	PACKING(PHONE JACK)	
39	2B		G53-1626-03	PACKING(D-SUB OUTER)	
40	2B		G53-1643-04	PACKING(DC CORD)	
41	2B		G53-1645-03	PACKING(D-SUB INNER)	
42	2A		G53-1662-04	PACKING(ANT)	
43	3A		G53-1676-03	PACKING(CHASSIS)	
44	2C	∗	H02-0630-03	INNER CARTON CASE	
45	2D	∗	H12-4235-05	PACKING FIXTURE	
46	2D	∗	H12-4236-05	PACKING FIXTURE	
49	3D	∗	H52-2197-02	ITEM CARTON CASE	
51	2C		J19-1584-15	MIC HOLDER ACCESSORY	
52	3B		J19-5464-13	HOLDER(SP)	
53	3B		J19-5485-12	HOLDER(PANEL)	
54	3B	∗	J19-5502-03	HOLDER(LCD)	
55	2B		J21-8479-02	MOUNTING HARDWARE(D-SUB)	
56	3B		J21-8481-03	MOUNTING HARDWARE(SP)	
57	3B	∗	J21-8569-03	MOUNTING HARDWARELCD	
58	2C		J29-0726-03	BRACKET ACCESSORY	
59	3B		J30-1289-04	SPACER(SP SHEET)	
60	3A	∗	K29-9401-03	KEY TOP	
A	2B		N09-2292-05	HEXAGON HEAD SCREW	
B	1A,2A		N67-3008-48	PAN HEAD SEMS SCREW	
C	1A,2B	∗	N87-2606-43	BRAZIER HEAD TAPTITE SCREW	
D	1A,2A,2B		N87-2608-48	BRAZIER HEAD TAPTITE SCREW	
61	2C		N99-2039-05	SCREW SET ACCESSORY	
62	3B		T07-0757-15	SPEAKER	
63	1C		T91-0639-35	MICROPHONE ACCESSORY	
64	2A		W09-0971-05	LITHIUM CELL	
DISPLAY UNIT (X54-3640-10)					
D914		∗	B30-2304-05	LED(RED/GREEN)	
D915-926			B30-2281-05	LED(Y)	
D927-936			B30-2282-05	LED(Y)	
C903			CK73HB1E103K	CHIP C 0.010UF K	
C905			CK73HB1A104K	CHIP C 0.10UF K	
C906			CK73HB1H222K	CHIP C 2200PF K	
C907-909			CK73HB1H102K	CHIP C 1000PF K	
C910-912			CC73HCH1H101J	CHIP C 100PF J	
C913			CK73HB1A104K	CHIP C 0.10UF K	
C914			CK73HB1H102K	CHIP C 1000PF K	
C915			CK73FB1E475K	CHIP C 4.7UF K	
C916			CK73GB1E105K	CHIP C 1.0UF K	
C917,918			CK73HB1A104K	CHIP C 0.10UF K	
C919			CK73HB1H102K	CHIP C 1000PF K	
C920			CC73HCH1H121J	CHIP C 120PF J	
C921			CK73HB1A104K	CHIP C 0.10UF K	
C922-925			CK73HB1H102K	CHIP C 1000PF K	
C926-929			CK73HB1A104K	CHIP C 0.10UF K	
C930			CK73GB1E105K	CHIP C 1.0UF K	
C931,932			CK73HB1H102K	CHIP C 1000PF K	
C933			CK73GB1E105K	CHIP C 1.0UF K	
C934			CK73HB1H102K	CHIP C 1000PF K	
C935		∗	CS77BA1E4R7M	CHIP TNTL 4.7UF 25WV	
C936			CC73HCH1H100D	CHIP C 10PF D	
C938			CC73HCH1H100D	CHIP C 10PF D	
C939			CK73GB1C104K	CHIP C 0.10UF K	
C940			CK73FB1A106K	CHIP C 10UF K	
C941,942			CK73HB1H102K	CHIP C 1000PF K	
C943,944		∗	CS77BA1E4R7M	CHIP TNTL 4.7UF 25WV	
C945			CK73GB1H103K	CHIP C 0.010UF K	
C946			CC73HCH1H101J	CHIP C 100PF J	
C947			CK73HB1A104K	CHIP C 0.10UF K	
C948			CC73HCH1H101J	CHIP C 100PF J	
C949-954			CK73GB1E105K	CHIP C 1.0UF K	
C955			CC73HCH1H101J	CHIP C 100PF J	
C956,957			CK73HB1E103K	CHIP C 0.010UF K	
C958			CK73HB1H102K	CHIP C 1000PF K	
C959,960			CK73HB1E103K	CHIP C 0.010UF K	
C961			CK73HB0J105K	CHIP C 1.0UF K	
C962			CK73HB1A104K	CHIP C 0.10UF K	
C963			CC73HCH1H101J	CHIP C 100PF J	
C964			CK73GB1E105K	CHIP C 1.0UF K	
C965			CK73HB1A104K	CHIP C 0.10UF K	
C966,967			CK73HB1H102K	CHIP C 1000PF K	
CN901			E40-6559-05	FLAT CABLE CONNECTOR	
CN902			E41-2671-05	PIN ASSY	
CN905			E40-6557-05	FLAT CABLE CONNECTOR	
J901			E58-0522-05	MODULAR JACK	

PARTS LIST

DISPLAY UNIT (X54-3640-10)
TX-RX UNIT (X57-7390-11)

Ref. No.	Address	New parts	Parts No.	Description	Destination
			J31-0551-05	COLLAR	
L901,902			L41-1095-39	SMALL FIXED INDUCTOR(1.0UH)	
L903-905			L92-0140-05	CHIP FERRITE	
L906			L92-0163-05	BEADS CORE	
L907			L92-0140-05	CHIP FERRITE	
L908			L92-0163-05	BEADS CORE	
X901			L77-1950-05	CRYSTAL RESONATOR(11.0592MHZ)	
CP907,908			RK75HA1JR00J	CHIP-COM 0.00 J 1/16W	
CP909			RK74HA1J104J	CHIP-COM 100K J 1/16W	
CP910		*	RK74HA1J101J	CHIP-COM 100 J 1/16W	
CP912		*	RK74HA1J101J	CHIP-COM 100 J 1/16W	
CP917			RK74HA1J104J	CHIP-COM 100K J 1/16W	
R900			RK73HB1J000J	CHIP R 0.0 J 1/16W	
R901			RK73GB2A000J	CHIP R 0.0 J 1/10W	
R902			RK73HB1J102J	CHIP R 1.0K J 1/16W	
R904			RK73HB1J101J	CHIP R 100 J 1/16W	
R905			RK73HB1J102J	CHIP R 1.0K J 1/16W	
R906			RK73HB1J331J	CHIP R 330 J 1/16W	
R907			RK73HB1J104J	CHIP R 100K J 1/16W	
R908			RK73HB1J473J	CHIP R 47K J 1/16W	
R909			RK73HB1J104J	CHIP R 100K J 1/16W	
R911			RK73HB1J472J	CHIP R 4.7K J 1/16W	
R912			RK73HB1J333J	CHIP R 33K J 1/16W	
R913			RK73HB1J823J	CHIP R 82K J 1/16W	
R914			RK73HB1J104J	CHIP R 100K J 1/16W	
R915			RK73HB1J473J	CHIP R 47K J 1/16W	
R916,917			RK73HB1J103J	CHIP R 10K J 1/16W	
R918			RK73GB2A100J	CHIP R 10 J 1/10W	
R919			RK73HB1J103J	CHIP R 10K J 1/16W	
R920,921			RK73HB1J101J	CHIP R 100 J 1/16W	
R922-925			RK73HB1J102J	CHIP R 1.0K J 1/16W	
R926			RK73HB1J103J	CHIP R 10K J 1/16W	
R927			RK73HB1J473J	CHIP R 47K J 1/16W	
R928			RK73HB1J103J	CHIP R 10K J 1/16W	
R929			RK73HB1J474J	CHIP R 470K J 1/16W	
R930			RK73HB1J103J	CHIP R 10K J 1/16W	
R931			RK73FB2B561J	CHIP R 560 J 1/8W	
R932			RK73FB2B471J	CHIP R 470 J 1/8W	
R933			RK73HB1J101J	CHIP R 100 J 1/16W	
R934-937			RK73HB1J473J	CHIP R 47K J 1/16W	
R938,939			RK73HB1J103J	CHIP R 10K J 1/16W	
R940			RK73HB1J274J	CHIP R 270K J 1/16W	
R941			RK73HB1J124J	CHIP R 120K J 1/16W	
R942			RK73HB1J000J	CHIP R 0.0 J 1/16W	
R943			RK73HB1J102J	CHIP R 1.0K J 1/16W	
R944			RK73HB1J104J	CHIP R 100K J 1/16W	
R945,946			RK73HB1J000J	CHIP R 0.0 J 1/16W	
R947			RK73HB1J474J	CHIP R 470K J 1/16W	
R948			RK73HB1J103J	CHIP R 10K J 1/16W	
R949			RK73HB1J102J	CHIP R 1.0K J 1/16W	
R950			RK73HB1J473J	CHIP R 47K J 1/16W	
R952			RK73HB1J000J	CHIP R 0.0 J 1/16W	
R953			RK73GB2A271J	CHIP R 270 J 1/10W	
R954			RK73GB2A470J	CHIP R 47 J 1/10W	
R955			RK73GB2A271J	CHIP R 270 J 1/10W	
R956			RK73GB2A101J	CHIP R 100 J 1/10W	
R957,958			RK73GB2A271J	CHIP R 270 J 1/10W	
R960			RK73HB1J000J	CHIP R 0.0 J 1/16W	
R962			RK73HB1J000J	CHIP R 0.0 J 1/16W	
R963,964			RK73GB2A391J	CHIP R 390 J 1/10W	
R965,966			RK73GB2A821J	CHIP R 820 J 1/10W	
R967-974			RK73HB1J103J	CHIP R 10K J 1/16W	
R976			RK73HB1J000J	CHIP R 0.0 J 1/16W	
R977-979			RK73HB1J473J	CHIP R 47K J 1/16W	
R981,982			RK73HB1J103J	CHIP R 10K J 1/16W	
R986			RK73HB1J103J	CHIP R 10K J 1/16W	
R988			RK73HB1J473J	CHIP R 47K J 1/16W	
R989			RK73HB1J474J	CHIP R 470K J 1/16W	
R990			RK73HB1J472J	CHIP R 4.7K J 1/16W	
R991			RK73HB1J474J	CHIP R 470K J 1/16W	
R992			RK73HB1J000J	CHIP R 0.0 J 1/16W	
R996			RK73HB1J472J	CHIP R 4.7K J 1/16W	
R997			RK73GB2A000J	CHIP R 0.0 J 1/10W	
R998			RK73HB1J000J	CHIP R 0.0 J 1/16W	
R999			RK73HB1J101J	CHIP R 100 J 1/16W	
TX-RX UNIT (X57-7390-11 for service)					
D901,902			AVRM16080MAAB	VARISTOR	
D903			02DZ18F-X,Y	ZENER DIODE	
D904			AVRM16080MAAB	VARISTOR	
D906			MINISMDC020F	VARISTOR	
D907			02DZ18F-X,Y	ZENER DIODE	
D908			HSC119	DIODE	
D910			1SS416	DIODE	
D911,912			HSC119	DIODE	
D913			DA204U	DIODE	
D937			1SS416	DIODE	
IC901			TC7W66FK-F	MOS-IC	
IC902			TC75S51FE(F)	MOS-IC	
IC903			XC6204B502PR	MOS-IC	
IC904			XC6204B332M	MOS-IC	
IC905			TC7SH126FU-F	MOS-IC	
IC906			LM2682MMX	MOS-IC	
IC907			TC7WH126FU-F	MOS-IC	
IC908			TC7SH08FU-F	MOS-IC	
IC909			LMC7101BIM5	MOS-IC	
IC910			TC74LCX245FK	MOS-IC	
IC911		*	30620SPGPU3C	MICROPROCESSOR IC	
IC912			TC7WZ245FK-F	MOS-IC	
IC913		*	29AL16D7KCCA	ROM IC	
Q901			SSM3K15TE(F)	FET	
Q902			DTC144EE	DIGITAL TRANSISTOR	
Q904			DTC144EE	DIGITAL TRANSISTOR	
Q905,906			DTC114EE	DIGITAL TRANSISTOR	
Q908,909			DTC114EE	DIGITAL TRANSISTOR	
Q910			12A02CH	TRANSISTOR	
Q911			SSM3K15TE(F)	FET	
Q913			UPA672T-A	FET	
TH901			ERTJ0EV104H	THERMISTOR	
C1			CK73HB0J105K	CHIP C 1.0UF K	
C2			CC73HCH1H101J	CHIP C 100PF J	
C3			CK73HB1H471K	CHIP C 470PF K	
C4			CK73HB1A104K	CHIP C 0.10UF K	
C5			CK73HB1E103K	CHIP C 0.010UF K	
C6			CC73HCH1H101J	CHIP C 100PF J	
C7			CC73HCH1H180J	CHIP C 18PF J	

PARTS LIST

TX-RX UNIT (X57-7390-11)

Ref. No.	Address	New parts	Parts No.	Description			Destination
C8			CC73HCH1H080B	CHIP C	8.0PF	B	
C9			CK73HB1E103K	CHIP C	0.010UF	K	
C10			CC73HCH1H390J	CHIP C	39PF	J	
C11			CK73FB1A106K	CHIP C	10UF	K	
C12			CC73HCH1H080B	CHIP C	8.0PF	B	
C13			CK73HB1E103K	CHIP C	0.010UF	K	
C14			CK73GB1E105K	CHIP C	1.0UF	K	
C15			CC73HCH1H101J	CHIP C	100PF	J	
C16 ,17			CK73HB1E103K	CHIP C	0.010UF	K	
C18 -23			CC73HCH1H101J	CHIP C	100PF	J	
C24			CK73HB1A104K	CHIP C	0.10UF	K	
C25 ,26			CC73HCH1H101J	CHIP C	100PF	J	
C27			CK73HB1A104K	CHIP C	0.10UF	K	
C28 ,29			CC73HCH1H101J	CHIP C	100PF	J	
C31			CC73HCH1H101J	CHIP C	100PF	J	
C32		*	CS77CA1VR15M	CHIP TNTL	0.15UF	35WV	
C33			CC73HCH1H330J	CHIP C	33PF	J	
C34			CC73HCH1H470J	CHIP C	47PF	J	
C35			CS77BA1D100M	CHIP TNTL	10UF	20WV	
C36			CC73HCH1H050B	CHIP C	5.0PF	B	
C37			C92-0863-05	CHIP TNTL	0.047UF	35WV	
C38			C93-0787-05	CHIP C	0.10UF		
C39			CC73HCH1H030B	CHIP C	3.0PF	B	
C41			CK73HB1H471K	CHIP C	470PF	K	
C43			CK73HB1H471K	CHIP C	470PF	K	
C44 ,45			CC73HCH1H101J	CHIP C	100PF	J	
C46			CC73HCH1H050B	CHIP C	5.0PF	B	
C47			CC73HCH1H470J	CHIP C	47PF	J	
C48			CK73HB0J105K	CHIP C	1.0UF	K	
C49			CC73HCH1H100B	CHIP C	10PF	B	
C50 ,51			CC73HCH1H151J	CHIP C	150PF	J	
C52 ,53			CK73HB1H471K	CHIP C	470PF	K	
C54			CK73HB1A104K	CHIP C	0.10UF	K	
C55			CK73HB0J105K	CHIP C	1.0UF	K	
C56			CK73HB1H471K	CHIP C	470PF	K	
C58			CC73HCH1H120G	CHIP C	12PF	G	
C59			CC73HCH1H150G	CHIP C	15PF	G	
C60			CC73HCH1HR75B	CHIP C	0.75PF	B	
C61			CC73HCH1H0R5B	CHIP C	0.5PF	B	
C63			CC73HCH1HR75B	CHIP C	0.75PF	B	
C64			CC73HCH1H070B	CHIP C	7.0PF	B	
C65			CK73FB1A106K	CHIP C	10UF	K	
C66 ,67			CC73HCH1H060B	CHIP C	6.0PF	B	
C68			CC73HCH1H040B	CHIP C	4.0PF	B	
C69			CC73HCH1H050B	CHIP C	5.0PF	B	
C70			CK73HB1H471K	CHIP C	470PF	K	
C71			CK73GB1E105K	CHIP C	1.0UF	K	
C72			CC73HCH1H030B	CHIP C	3.0PF	B	
C73			CK73HB1H471K	CHIP C	470PF	K	
C74			CC73HCH1H0R5B	CHIP C	0.5PF	B	
C75			CK73HB1H471K	CHIP C	470PF	K	
C76			CC73HCH1H0R5B	CHIP C	0.5PF	B	
C77 ,78			CK73HB1H471K	CHIP C	470PF	K	
C79			CC73HCH1H070B	CHIP C	7.0PF	B	
C80			CK73HB1H471K	CHIP C	470PF	K	
C81			CC73HCH1H100B	CHIP C	10PF	B	
C82			CC73HCH1H330J	CHIP C	33PF	J	
C83 ,84			CK73HB1H471K	CHIP C	470PF	K	
C85			CK73HB1A104K	CHIP C	0.10UF	K	

Ref. No.	Address	New parts	Parts No.	Description			Destination
C86			CC73HCH1H070B	CHIP C	7.0PF	B	
C88			CK73HB1E103K	CHIP C	0.010UF	K	
C90 -92			CK73HB1E103K	CHIP C	0.010UF	K	
C98			CK73HB1H471K	CHIP C	470PF	K	
C101			CK73HB1H102K	CHIP C	1000PF	K	
C102			CK73HB1H471K	CHIP C	470PF	K	
C103			CK73HB1E103K	CHIP C	0.010UF	K	
C104-107			CC73HCH1H101J	CHIP C	100PF	J	
C108			CK73FB1E475K	CHIP C	4.7UF	K	
C109			CC73HCH1H060D	CHIP C	6.0PF	D	
C110-112			CC73HCH1H101J	CHIP C	100PF	J	
C115-117			CC73HCH1H101J	CHIP C	100PF	J	
C118			CC73HCH1H060D	CHIP C	6.0PF	D	
C120			CK73HB1H471K	CHIP C	470PF	K	
C123			CC73HCH1H220J	CHIP C	22PF	J	
C125			CK73HB1H471K	CHIP C	470PF	K	
C127			CK73HB1H471K	CHIP C	470PF	K	
C128			CC73HCH1H470J	CHIP C	47PF	J	
C131			CC73HCH1H101J	CHIP C	100PF	J	
C132			CK73HB1H471K	CHIP C	470PF	K	
C133			CC73HCH1H220J	CHIP C	22PF	J	
C134			CK73HB1H471K	CHIP C	470PF	K	
C135			CC73HCH1H101J	CHIP C	100PF	J	
C136			CK73FB1H471K	CHIP C	470PF	K	
C137		*	CK73GB0J335K	CHIP C	3.3UF	K	
C141			CC73HCH1H220J	CHIP C	22PF	J	
C142			CC73HCH1H470J	CHIP C	47PF	J	
C145			CC73HCH1H101J	CHIP C	100PF	J	
C147			CK73HB1H471K	CHIP C	470PF	K	
C150			C92-0875-05	ELECTRO	47UF	25WV	
C152,153			CC73HCH1H101J	CHIP C	100PF	J	
C155,156			CC73HCH1H220J	CHIP C	22PF	J	
C157			CC73HCH1H101J	CHIP C	100PF	J	
C158			CK73HB1H471K	CHIP C	470PF	K	
C162			CC73FCH1H020C	CHIP C	2.0PF	C	
C164			CC73GCH1H0R5B	CHIP C	0.5PF	B	
C165			CC73GCH1H010B	CHIP C	1.0PF	B	
C166			CC73HCH1H101J	CHIP C	100PF	J	
C169			CC73HCH1H101J	CHIP C	100PF	J	
C170			CC73GCH1H0R5B	CHIP C	0.5PF	B	
C171			CC73GCH1H030B	CHIP C	3.0PF	B	
C172			CC73HCH1H101J	CHIP C	100PF	J	
C174			C93-0553-05	CHIP C	3.0PF	C	
C175			CC73HCH1H101J	CHIP C	100PF	J	
C177			C93-0556-05	CHIP C	6.0PF	D	
C178			CC73GCH1H0R5B	CHIP C	0.5PF	B	
C179			CC73GCH1H030B	CHIP C	3.0PF	B	
C180,181			CC73HCH1H101J	CHIP C	100PF	J	
C184			CM73F2H010C	CHIP C	1.0PF	C	
C185			CM73F2H060D	CHIP C	6.0PF	D	
C186			CM73F2H121J	CHIP C	120PF	J	
C187			C93-0553-05	CHIP C	3.0PF	C	
C188			CM73F2H080D	CHIP C	8.0PF	D	
C189			CM73F2H070D	CHIP C	7.0PF	D	
C190			C93-0555-05	CHIP C	5.0PF	C	
C193,194			CK73HB1H471K	CHIP C	470PF	K	
C201			CK73HB1E103K	CHIP C	0.010UF	K	
C202-205			CK73HB1A104K	CHIP C	0.10UF	K	
C206			CC73HCH1H100B	CHIP C	10PF	B	

PARTS LIST

TX-RX UNIT (X57-7390-11)

Ref. No.	Address	New parts	Parts No.	Description	Destination
C207,208			CK73HB1E103K	CHIP C 0.010UF K	
C210			CK73HB1A104K	CHIP C 0.10UF K	
C211			CC73HCH1H100B	CHIP C 10PF B	
C212,213			CK73HB1A104K	CHIP C 0.10UF K	
C214			CC73HCH1H680J	CHIP C 68PF J	
C215			CC73HCH1H101J	CHIP C 100PF J	
C216			CC73HCH1H680J	CHIP C 68PF J	
C217			CK73HB1A104K	CHIP C 0.10UF K	
C218,219			CK73GB0J475K	CHIP C 4.7UF K	
C220			CC73HCH1H470J	CHIP C 47PF J	
C221			CK73FB1A106K	CHIP C 10UF K	
C222-224			CK73HB1E103K	CHIP C 0.010UF K	
C225			CK73HB1A104K	CHIP C 0.10UF K	
C226			CK73FB1A106K	CHIP C 10UF K	
C227			CC73HCH1H820J	CHIP C 82PF J	
C228-230			CK73HB1A104K	CHIP C 0.10UF K	
C231			CK73HB1E103K	CHIP C 0.010UF K	
C232			CK73HB1A104K	CHIP C 0.10UF K	
C233			CK73HB0J105K	CHIP C 1.0UF K	
C234			CK73HB1E103K	CHIP C 0.010UF K	
C236			CC73HCH1H470J	CHIP C 47PF J	
C237			CK73HB1H471K	CHIP C 470PF K	
C238-240			CK73HB1E103K	CHIP C 0.010UF K	
C242			CK73HB1H471K	CHIP C 470PF K	
C243			CK73HB1E103K	CHIP C 0.010UF K	
C244			CC73HCH1H470J	CHIP C 47PF J	
C245			CK73HB1H471K	CHIP C 470PF K	
C246			CK73HB1E103K	CHIP C 0.010UF K	
C247			CK73HB1A104K	CHIP C 0.10UF K	
C252			CC73HCH1H010B	CHIP C 1.0PF B	
C256			CC73HCH1H010B	CHIP C 1.0PF B	
C257			CK73HB1H471K	CHIP C 470PF K	
C260			CK73HB1E103K	CHIP C 0.010UF K	
C261			CC73HCH1H101J	CHIP C 100PF J	
C262			CK73HB1E103K	CHIP C 0.010UF K	
C263,264			CK73HB1H471K	CHIP C 470PF K	
C265			CK73HB1E103K	CHIP C 0.010UF K	
C266			CK73HB1H102K	CHIP C 1000PF K	
C267			CC73HCH1H070B	CHIP C 7.0PF B	
C268			CK73HB1E103K	CHIP C 0.010UF K	
C269,270			CK73HB1H471K	CHIP C 470PF K	
C271			CC73HCH1H100B	CHIP C 10PF B	
C272			CC73HCH1H020B	CHIP C 2.0PF B	
C273			CC73HCH1H120G	CHIP C 12PF G	
C275			CC73HCH1H010B	CHIP C 1.0PF B	
C276			CC73HCH1H060B	CHIP C 6.0PF B	
C278-281			CK73HB1H471K	CHIP C 470PF K	
C283			CC73HCH1H080B	CHIP C 8.0PF B	
C284			CK73HB1H471K	CHIP C 470PF K	
C285			CC73HCH1H220G	CHIP C 22PF G	
C286			CC73HCH1H070B	CHIP C 7.0PF B	
C287			CC73HCH1H050B	CHIP C 5.0PF B	
C288			CK73HB1H471K	CHIP C 470PF K	
C289			CK73GB1H104K	CHIP C 0.10UF K	
C290			CC73HCH1H180G	CHIP C 18PF G	
C291			CC73HCH1H070B	CHIP C 7.0PF B	
C292			CK73HB1H471K	CHIP C 470PF K	
C293			CC73HCH1H100B	CHIP C 10PF B	
C294			CK73HB1H471K	CHIP C 470PF K	
C295			CC73HCH1H180G	CHIP C 18PF G	

Ref. No.	Address	New parts	Parts No.	Description	Destination
C296,297			CC73HCH1H070B	CHIP C 7.0PF B	
C298			CK73HB1H471K	CHIP C 470PF K	
C299			CC73HCH1H220G	CHIP C 22PF G	
C301			CC73HCH1H100B	CHIP C 10PF B	
C302			CK73GB1H104K	CHIP C 0.10UF K	
C307,308			CK73HB1H471K	CHIP C 470PF K	
C310			CC73HCH1H330G	CHIP C 33PF G	
C315			CC73HCH1H050B	CHIP C 5.0PF B	
C316			CK73HB1H471K	CHIP C 470PF K	
C317			CC73HCH1H100B	CHIP C 10PF B	
C318,319			CC73HCH1H020B	CHIP C 2.0PF B	
C320			CK73HB1H471K	CHIP C 470PF K	
C321			CC73HCH1H040B	CHIP C 4.0PF B	
C322			CC73HCH1H080B	CHIP C 8.0PF B	
C323			CC73HCH1H101J	CHIP C 100PF J	
C324			CC73HCH1H120G	CHIP C 12PF G	
C325			CC73HCH1H040B	CHIP C 4.0PF B	
C327			CK73HB1H471K	CHIP C 470PF K	
C330-334			CK73HB1A104K	CHIP C 0.10UF K	
C335			CC73HCH1H120G	CHIP C 12PF G	
C336			CK73HB1E103K	CHIP C 0.010UF K	
C337,338			CK73HB1A104K	CHIP C 0.10UF K	
C339			CK73HB1E103K	CHIP C 0.010UF K	
C341			CK73HB0J105K	CHIP C 1.0UF K	
C342			CK73FB1A106K	CHIP C 10UF K	
C343			CK73HB1A104K	CHIP C 0.10UF K	
C344			CC73HCH1H101J	CHIP C 100PF J	
C347			CK73HB1H471K	CHIP C 470PF K	
C348			CK73HB1E103K	CHIP C 0.010UF K	
C358			CK73HB1H102K	CHIP C 1000PF K	
C401			C92-0777-05	ELECTRO 1000UF 25WV	
C403			CK73HB1H471K	CHIP C 470PF K	
C405			CK73HB1H471K	CHIP C 470PF K	
C406			CK73HB1H102K	CHIP C 1000PF K	
C409			CK73HB1E103K	CHIP C 0.010UF K	
C410			CK73GB1H103K	CHIP C 0.010UF K	
C411			CK73HB1H471K	CHIP C 470PF K	
C413			CK73GB1E105K	CHIP C 1.0UF K	
C415			CK73HB1H471K	CHIP C 470PF K	
C417			CK73HB1H471K	CHIP C 470PF K	
C419			CK73HB1H102K	CHIP C 1000PF K	
C420			CK73HB1A104K	CHIP C 0.10UF K	
C421			CK73GB1H473K	CHIP C 0.047UF K	
C422			CK73FB1E475K	CHIP C 4.7UF K	
C424			CK73GB1E105K	CHIP C 1.0UF K	
C425			CK73GB1H104K	CHIP C 0.10UF K	
C426			CK73HB1E103K	CHIP C 0.010UF K	
C427			CK73HB1H471K	CHIP C 470PF K	
C428			CC73HCH1H101J	CHIP C 100PF J	
C429			CK73GB1H104K	CHIP C 0.10UF K	
C430,431			CK73FB1E475K	CHIP C 4.7UF K	
C432			C92-0875-05	ELECTRO 47UF 25WV	
C433			CK73GB1H104K	CHIP C 0.10UF K	
C434			CK73HB1H102K	CHIP C 1000PF K	
C435			CK73FB1A106K	CHIP C 10UF K	
C436		*	CS77BA1A100M	CHIP TNTL 10UF 10WV	
C437			CK73HB1A224K	CHIP C 0.22UF K	
C438			CK73FB1A106K	CHIP C 10UF K	
C439			CK73HB1E103K	CHIP C 0.010UF K	
C440			CK73GB1E105K	CHIP C 1.0UF K	

PARTS LIST

TX-RX UNIT (X57-7390-11)

Ref. No.	Address	New parts	Parts No.	Description	Destination
C441,442			CK73HB1E103K	CHIP C 0.010UF K	
C443,444			CK73GB1E105K	CHIP C 1.0UF K	
C445			CK73FB1A106K	CHIP C 10UF K	
C446			C92-0765-05	CHIP TNTL 4.7UF 16WV	
C447			CK73HB1A224K	CHIP C 0.22UF K	
C448			CK73HB1E103K	CHIP C 0.010UF K	
C449			CK73GB1C225K	CHIP C 2.2UF K	
C450			CK73HB1E103K	CHIP C 0.010UF K	
C451			CK73GB1C225K	CHIP C 2.2UF K	
C452			CK73HB0J105K	CHIP C 1.0UF K	
C453			CK73GB1E105K	CHIP C 1.0UF K	
C454			CK73HB1H471K	CHIP C 470PF K	
C455,456			CK73HB1E103K	CHIP C 0.010UF K	
C457,458			CK73GB1E105K	CHIP C 1.0UF K	
C459			C92-0765-05	CHIP TNTL 4.7UF 16WV	
C460			CK73HB1A104K	CHIP C 0.10UF K	
C461			CC73HCH1H181J	CHIP C 180PF J	
C462			CK73HB1H471K	CHIP C 470PF K	
C463			CK73HB0J105K	CHIP C 1.0UF K	
C464			CC73HCH1H220J	CHIP C 22PF J	
C465-467			CK73GB1E105K	CHIP C 1.0UF K	
C468			CK73HB1E103K	CHIP C 0.010UF K	
C471			CK73HB0J105K	CHIP C 1.0UF K	
C473		*	CS77BA1E4R7M	CHIP TNTL 4.7UF 25WV	
C474			CK73HB1E103K	CHIP C 0.010UF K	
C475			CK73FB1A106K	CHIP C 10UF K	
C501,502			CK73HB0J105K	CHIP C 1.0UF K	
C503-507			CK73HB1A104K	CHIP C 0.10UF K	
C508			CK73HB1H102K	CHIP C 1000PF K	
C509			CK73HB1A104K	CHIP C 0.10UF K	
C511-514			CK73HB1A104K	CHIP C 0.10UF K	
C515			CK73HB0J105K	CHIP C 1.0UF K	
C516,517			CK73HB1A104K	CHIP C 0.10UF K	
C518			CK73GB1E105K	CHIP C 1.0UF K	
C520-523			CK73HB1E103K	CHIP C 0.010UF K	
C527			CK73HB1E103K	CHIP C 0.010UF K	
C528			CK73HB1A104K	CHIP C 0.10UF K	
C529,530			CK73HB1E103K	CHIP C 0.010UF K	
C531			CK73HB1A104K	CHIP C 0.10UF K	
C532			CK73HB1E103K	CHIP C 0.010UF K	
C533			CK73HB1A104K	CHIP C 0.10UF K	
C534			CC73HCH1H101J	CHIP C 100PF J	
C535			CS77CP0J100M	CHIP TNTL 10UF 6.3WV	
C536			CK73HB1E103K	CHIP C 0.010UF K	
C537,538			CK73HB1A104K	CHIP C 0.10UF K	
C539			CK73HB1E103K	CHIP C 0.010UF K	
C540			CK73HB0J105K	CHIP C 1.0UF K	
C541			CK73HB1A104K	CHIP C 0.10UF K	
C542			CS77CP0J100M	CHIP TNTL 10UF 6.3WV	
C543-546			CC73HCH1H101J	CHIP C 100PF J	
C547-550			CK73HB1A104K	CHIP C 0.10UF K	
C551			CK73HB1E103K	CHIP C 0.010UF K	
C552			CK73HB0J105K	CHIP C 1.0UF K	
C553			CC73HCH1H101J	CHIP C 100PF J	
C554-558			CK73HB1A104K	CHIP C 0.10UF K	
C559			CK73HB1E103K	CHIP C 0.010UF K	
C560			CK73HB0J105K	CHIP C 1.0UF K	
C561-563			CC73HCH1H101J	CHIP C 100PF J	
C565,566			CC73HCH1H101J	CHIP C 100PF J	
C567			CK73HB1H102K	CHIP C 1000PF K	
C568-578			CC73HCH1H101J	CHIP C 100PF J	
C579			CK73HB1H102K	CHIP C 1000PF K	
C580			CC73HCH1H101J	CHIP C 100PF J	
C581-583			CK73HB1H102K	CHIP C 1000PF K	
C584,585			CC73HCH1H101J	CHIP C 100PF J	
C586			CK73HB1E103K	CHIP C 0.010UF K	
C587-589			CK73HB1H102K	CHIP C 1000PF K	
C590,591			CK73HB1E103K	CHIP C 0.010UF K	
C592,593			CC73HCH1H101J	CHIP C 100PF J	
C594,595			CK73HB1E103K	CHIP C 0.010UF K	
C596			CK73HB1A104K	CHIP C 0.10UF K	
C597-607			CK73HB1H102K	CHIP C 1000PF K	
C608			CC73HCH1H101J	CHIP C 100PF J	
C609			CK73HB1H102K	CHIP C 1000PF K	
C610			CC73HCH1H101J	CHIP C 100PF J	
C611			CK73HB1H102K	CHIP C 1000PF K	
C612			CK73GB1H103K	CHIP C 0.010UF K	
C613-616			CK73GB1E105K	CHIP C 1.0UF K	
C618			CK73HB1E103K	CHIP C 0.010UF K	
C620,621			CK73HB1E103K	CHIP C 0.010UF K	
C701			CK73GB0J335K	CHIP C 3.3UF K	
C702			CK73HB0J105K	CHIP C 1.0UF K	
C705			CK73HB1H122K	CHIP C 1200PF K	
C706			CK73HB1H331K	CHIP C 330PF K	
C707			CK73HB1A104K	CHIP C 0.10UF K	
C708			CK73HB1H122K	CHIP C 1200PF K	
C709			CC73HCH1H221J	CHIP C 220PF J	
C710			CK73HB1E103K	CHIP C 0.010UF K	
C711			CC73HCH1H181J	CHIP C 180PF J	
C712			CC73HCH1H680J	CHIP C 68PF J	
C714			CK73HB1E103K	CHIP C 0.010UF K	
C715			CK73HB1H122K	CHIP C 1200PF K	
C716			CC73HCH1H221J	CHIP C 220PF J	
C717			CK73HB1A104K	CHIP C 0.10UF K	
C718			CC73HCH1H221J	CHIP C 220PF J	
C719,720			CK73HB1A104K	CHIP C 0.10UF K	
C721			CC73HCH1H221J	CHIP C 220PF J	
C722			CC73HCH1H470J	CHIP C 47PF J	
C723,724			CK73HB1A104K	CHIP C 0.10UF K	
C725			CK73HB1E103K	CHIP C 0.010UF K	
C726			CK73HB1A104K	CHIP C 0.10UF K	
C727			CC73HCH1H820J	CHIP C 82PF J	
C729			CK73HB1A104K	CHIP C 0.10UF K	
C730			CK73HB1H561K	CHIP C 560PF K	
C731			CK73HB1A104K	CHIP C 0.10UF K	
C732			CK73HB1E103K	CHIP C 0.010UF K	
C734			CK73HB1E103K	CHIP C 0.010UF K	
C735			CK73FB1E475K	CHIP C 4.7UF K	
C736			CC73HCH1H101J	CHIP C 100PF J	
C737			CK73HB1A104K	CHIP C 0.10UF K	
C738			CK73HB1H102K	CHIP C 1000PF K	
C740			CK73HB1H472K	CHIP C 4700PF K	
C741			CK73HB1A154K	CHIP C 0.15UF K	
C742			CK73HB1A104K	CHIP C 0.10UF K	
C743			CK73HB1E103K	CHIP C 0.010UF K	
C744			CK73HB1A104K	CHIP C 0.10UF K	
C745-747			CK73HB1E103K	CHIP C 0.010UF K	
C748-751			CK73HB1A104K	CHIP C 0.10UF K	
C752,753			CK73HB1E103K	CHIP C 0.010UF K	
C754			CK73HB1H102K	CHIP C 1000PF K	

PARTS LIST

TX-RX UNIT (X57-7390-11)

Ref. No.	Address	New parts	Parts No.	Description	Destination
C757			CC73HCH1H150J	CHIP C 15PF J	
C761			CK73HB1E103K	CHIP C 0.010UF K	
C762,763			CK73HB1A104K	CHIP C 0.10UF K	
C764			CC73HCH1H220J	CHIP C 22PF J	
C765,766			CK73GB1E105K	CHIP C 1.0UF K	
C767			CK73HB1A104K	CHIP C 0.10UF K	
C768,769			CK73HB1E103K	CHIP C 0.010UF K	
C770			CK73HB1A104K	CHIP C 0.10UF K	
C773			CK73HB1A104K	CHIP C 0.10UF K	
C774			CK73HB1H102K	CHIP C 1000PF K	
C775			CK73HB1A104K	CHIP C 0.10UF K	
C776			CK73HB0J105K	CHIP C 1.0UF K	
C777			CK73HB1H102K	CHIP C 1000PF K	
C778			CK73HB1A104K	CHIP C 0.10UF K	
C779			CC73HCH1H680J	CHIP C 68PF J	
C782-786			CK73HB1A104K	CHIP C 0.10UF K	
C787			CK73FB1A106K	CHIP C 10UF K	
C788			CK73HB1A104K	CHIP C 0.10UF K	
C789			CK73FB1E475K	CHIP C 4.7UF K	
C790			CK73FB1A106K	CHIP C 10UF K	
C791			CK73HB1H102K	CHIP C 1000PF K	
C792			CC73HCH1H470J	CHIP C 47PF J	
C793			CK73HB1H102K	CHIP C 1000PF K	
C794,795			CK73FB1A106K	CHIP C 10UF K	
C796-799			CK73HB1A104K	CHIP C 0.10UF K	
C801,802			CK73GB1E105K	CHIP C 1.0UF K	
C803-805			CK73HB1H102K	CHIP C 1000PF K	
C806		*	C92-0906-05	ELECTRO 330UF 16WV	
C807			C92-0875-05	ELECTRO 47UF 25WV	
C809			CK73HB1H102K	CHIP C 1000PF K	
C810			CK73HB1H471K	CHIP C 470PF K	
C811			CK73HB1H102K	CHIP C 1000PF K	
C813			CK73FB1A106K	CHIP C 10UF K	
C814			CK73HB1H471K	CHIP C 470PF K	
C815,816			CK73FB1A106K	CHIP C 10UF K	
C817			CK73HB1E103K	CHIP C 0.010UF K	
C818			CK73HB0J105K	CHIP C 1.0UF K	
C820			CK73GB1E105K	CHIP C 1.0UF K	
C821			CK73HB1H102K	CHIP C 1000PF K	
C824			CK73HB1H102K	CHIP C 1000PF K	
C825			CK73HCH1H101J	CHIP C 100PF J	
C901			CC73HCH1H101J	CHIP C 100PF J	
C902			CK73HB1H102K	CHIP C 1000PF K	
C903-906			CC73HCH1H101J	CHIP C 100PF J	
C907			CK73HB1H102K	CHIP C 1000PF K	
C908-921			CC73HCH1H101J	CHIP C 100PF J	
C922,923			CK73HB1H102K	CHIP C 1000PF K	
CN401,402			E23-1260-04	TERMINAL	
CN403			E41-1682-05	PIN ASSY	
CN502-513			E23-1278-05	TERMINAL	
CN516,517			E23-1278-05	TERMINAL	
CN520			E23-1278-05	TERMINAL	
CN527			E23-1278-05	TERMINAL	
CN540			E23-1278-05	TERMINAL	
CN542,543			E23-1278-05	TERMINAL	
CN549			E40-6720-05	SOCKET FOR PIN ASSY	
CN595			E40-6361-05	PIN ASSY	
CN597			E40-6558-05	FLAT CABLE CONNECTOR	
CN600			E40-6560-05	FLAT CABLE CONNECTOR	

Ref. No.	Address	New parts	Parts No.	Description	Destination
CN611,612			E23-1278-05	TERMINAL	
CN614			E23-1278-05	TERMINAL	
CN705			E40-6582-05	PIN ASSY	
CN901			E40-6560-05	FLAT CABLE CONNECTOR	
J701			E11-0425-05	3.5D PHONE JACK(3P)	
J901			E58-0521-05	SUB SOCKET(D)	
F401			F53-0328-05	FUSE	
F501			F53-0352-05	FUSE	
CN405			J19-5386-05	HOLDER	
CD201			L79-1850-05	TUNING COIL	
CF201			L72-1017-05	CERAMIC FILTER	
CF202			L72-1021-05	CERAMIC FILTER	
CF203			L72-1020-05	CERAMIC FILTER	
L1			L41-4795-39	SMALL FIXED INDUCTOR(4.7UH)	
L3			L92-0163-05	BEADS CORE	
L4			L40-1275-92	SMALL FIXED INDUCTOR(12NH)	
L6 ,7			L40-1001-86	SMALL FIXED INDUCTOR(10UH)	
L10			L40-1878-92	SMALL FIXED INDUCTOR(18NH)	
L11			L40-2285-92	SMALL FIXED INDUCTOR(220NH)	
L12			L40-1885-92	SMALL FIXED INDUCTOR(180NH)	
L13			L40-2285-92	SMALL FIXED INDUCTOR(220NH)	
L14			L40-1885-92	SMALL FIXED INDUCTOR(180NH)	
L15			L40-2285-92	SMALL FIXED INDUCTOR(220NH)	
L16			L40-1885-92	SMALL FIXED INDUCTOR(180NH)	
L17			L34-4607-05	AIR-CORE COIL	
L18			L34-4608-05	AIR-CORE COIL	
L19			L40-2285-92	SMALL FIXED INDUCTOR(220NH)	
L20			L92-0446-05	BEADS CORE	
L21			L40-1885-92	SMALL FIXED INDUCTOR(180NH)	
L22			L40-2285-92	SMALL FIXED INDUCTOR(220NH)	
L23			L40-1885-92	SMALL FIXED INDUCTOR(180NH)	
L25			L40-2775-71	SMALL FIXED INDUCTOR(27NH)	
L26			L40-2275-92	SMALL FIXED INDUCTOR(22NH)	
L31 -36			L92-0163-05	BEADS CORE	
L40 ,41			L92-0163-05	BEADS CORE	
L101			L40-1875-92	SMALL FIXED INDUCTOR(18NH)	
L102			L92-0140-05	CHIP FERRITE	
L103			L40-2275-92	SMALL FIXED INDUCTOR(22NH)	
L106			L92-0140-05	CHIP FERRITE	
L108,109			L92-0179-05	CHIP FERRITE	
L110			L34-4638-05	AIR-CORE COIL	
L111			L34-4758-05	AIR-CORE COIL	
L112-114			L34-4743-05	AIR-CORE COIL	
L115			L34-4848-05	AIR-CORE COIL	
L201			L40-1085-71	SMALL FIXED INDUCTOR(100NH)	
L202			L40-5681-86	SMALL FIXED INDUCTOR(0.56UH)	
L204			L41-4778-45	SMALL FIXED INDUCTOR(47NH)	
L205			L40-5681-86	SMALL FIXED INDUCTOR(0.56UH)	
L206			L92-0138-05	CHIP FERRITE	
L207			L40-5681-86	SMALL FIXED INDUCTOR(0.56UH)	
L208			L92-0138-05	CHIP FERRITE	
L209			L40-2275-92	SMALL FIXED INDUCTOR(22NH)	
L210			L39-1498-05	TOROIDAL COIL	
L211			L92-0138-05	CHIP FERRITE	
L212			L39-1498-05	TOROIDAL COIL	
L213			L40-1575-92	SMALL FIXED INDUCTOR(15NH)	

PARTS LIST

TX-RX UNIT (X57-7390-11)

Ref. No.	Address	New parts	Parts No.	Description	Destination
L214			L40-1875-92	SMALL FIXED INDUCTOR(18NH)	
L215			L39-1498-05	TOROIDAL COIL	
L216-219			L34-4565-05	AIR-CORE COIL	
L221			L41-1878-14	SMALL FIXED INDUCTOR(18NH)	
L222			L41-6878-14	SMALL FIXED INDUCTOR(68NH)	
L223,224			L34-4568-05	AIR-CORE COIL	
L225			L41-6878-14	SMALL FIXED INDUCTOR(68NH)	
L228			L40-2763-92	SMALL FIXED INDUCTOR(2.7NH)	
L230			L92-0138-05	CHIP FERRITE	
L402,403			L92-0179-05	CHIP FERRITE	
L404			L92-0639-05	CHIP FERRITE	
L405			L33-1496-05	SMALL FIXED INDUCTOR	
L406			L33-1462-05	SMALL FIXED INDUCTOR	
L501-503			L92-0138-05	CHIP FERRITE	
L506-511			L92-0138-05	CHIP FERRITE	
L512			L92-0140-05	CHIP FERRITE	
L517,518			L92-0138-05	CHIP FERRITE	
L521-523			L92-0162-05	BEADS CORE	
L901,902			L92-0140-05	CHIP FERRITE	
L903-905			L92-0162-05	BEADS CORE	
X1			L77-3016-05	TCXO (19.2MHZ)	
X501			L77-1802-05	CRYSTAL RESONATOR(32768HZ)	
X502			L77-3015-05	TCXO (18.432M/4P/12)	
XF202		*	L71-0649-05	MCF (58.05MHZ)	
R1 ,2			RK73HH1J223D	CHIP R 22K D 1/16W	
R3			RK73HB1J334J	CHIP R 330K J 1/16W	
R4			RK73HB1J101J	CHIP R 100 J 1/16W	
R5			RK73HB1J224J	CHIP R 220K J 1/16W	
R6			RK73HB1J472J	CHIP R 4.7K J 1/16W	
R7			RK73HB1J103J	CHIP R 10K J 1/16W	
R8			RK73HB1J472J	CHIP R 4.7K J 1/16W	
R10			RK73HB1J000J	CHIP R 0.0 J 1/16W	
R12			RK73HB1J472J	CHIP R 4.7K J 1/16W	
R13			RK73HB1J473J	CHIP R 47K J 1/16W	
R15 -19			RK73HB1J100J	CHIP R 10 J 1/16W	
R21			RK73HB1J100J	CHIP R 10 J 1/16W	
R22 ,23			RK73HB1J102J	CHIP R 1.0K J 1/16W	
R25			RK73HB1J000J	CHIP R 0.0 J 1/16W	
R26			RK73HB1J104J	CHIP R 100K J 1/16W	
R27			RK73HB1J473J	CHIP R 47K J 1/16W	
R28			RK73HB1J683J	CHIP R 68K J 1/16W	
R29			RK73HB1J000J	CHIP R 0.0 J 1/16W	
R30			RK73HB1J184J	CHIP R 180K J 1/16W	
R31			RK73HB1J473J	CHIP R 47K J 1/16W	
R32			RK73HB1J151J	CHIP R 150 J 1/16W	
R34			RK73HB1J102J	CHIP R 1.0K J 1/16W	
R35			RK73HH1J391D	CHIP R 390 D 1/16W	
R36			RK73HB1J106J	CHIP R 10M J 1/16W	
R37			RK73HB1J103J	CHIP R 10K J 1/16W	
R40 ,41			RK73HB1J000J	CHIP R 0.0 J 1/16W	
R42			RK73HB1J104J	CHIP R 100K J 1/16W	
R43			RK73HB1J100J	CHIP R 10 J 1/16W	
R44			RK73HB1J000J	CHIP R 0.0 J 1/16W	
R45			RK73HB1J104J	CHIP R 100K J 1/16W	
R46			RK73HB1J271J	CHIP R 270 J 1/16W	
R47			RK73HB1J154J	CHIP R 150K J 1/16W	
R49			RK73HB1J683J	CHIP R 68K J 1/16W	
R53 ,54			RK73HB1J473J	CHIP R 47K J 1/16W	

Ref. No.	Address	New parts	Parts No.	Description	Destination
R55			RK73HB1J472J	CHIP R 4.7K J 1/16W	
R56			RK73HB1J474J	CHIP R 470K J 1/16W	
R57			RK73HH1J181D	CHIP R 180 D 1/16W	
R58			RK73HB1J181J	CHIP R 180 J 1/16W	
R59			RK73HH1J181D	CHIP R 180 D 1/16W	
R60			RK73HB1J102J	CHIP R 1.0K J 1/16W	
R61			RK73HB1J473J	CHIP R 47K J 1/16W	
R62			RK73HB1J154J	CHIP R 150K J 1/16W	
R63			RK73HB1J101J	CHIP R 100 J 1/16W	
R64			RK73HB1J682J	CHIP R 6.8K J 1/16W	
R65			RK73HB1J103J	CHIP R 10K J 1/16W	
R66			RK73HB1J331J	CHIP R 330 J 1/16W	
R67			RK73HB1J222J	CHIP R 2.2K J 1/16W	
R68			RK73HB1J470J	CHIP R 47 J 1/16W	
R69			RK73HB1J000J	CHIP R 0.0 J 1/16W	
R70			RK73HB1J472J	CHIP R 4.7K J 1/16W	
R71			RK73HB1J474J	CHIP R 470K J 1/16W	
R72			RK73HB1J183J	CHIP R 18K J 1/16W	
R74			RK73HB1J102J	CHIP R 1.0K J 1/16W	
R75			RK73HB1J221J	CHIP R 220 J 1/16W	
R76			RK73HB1J474J	CHIP R 470K J 1/16W	
R77			RK73HB1J101J	CHIP R 100 J 1/16W	
R79 -83			RK73HB1J000J	CHIP R 0.0 J 1/16W	
R84 ,85			RK73GB2A000J	CHIP R 0.0 J 1/10W	
R86			RK73GB2A272J	CHIP R 2.7K J 1/10W	
R101			RK73HB1J332J	CHIP R 3.3K J 1/16W	
R102			RK73HB1J821J	CHIP R 820 J 1/16W	
R103			RK73HB1J5R6J	CHIP R 5.6 J 1/16W	
R104			RK73HB1J821J	CHIP R 820 J 1/16W	
R105			RK73HB1J333J	CHIP R 33K J 1/16W	
R106			RK73HB1J221J	CHIP R 220 J 1/16W	
R107			RK73HB1J682J	CHIP R 6.8K J 1/16W	
R108			RK73GB2A100J	CHIP R 10 J 1/10W	
R109			RK73HB1J471J	CHIP R 470 J 1/16W	
R110			RK73GB2A220J	CHIP R 22 J 1/10W	
R111			RK73HB1J561J	CHIP R 560 J 1/16W	
R112			RK73HB1J272J	CHIP R 2.7K J 1/16W	
R113			RK73GB2A100J	CHIP R 10 J 1/10W	
R114			RK73HB1J331J	CHIP R 330 J 1/16W	
R115			RK73HB1J000J	CHIP R 0.0 J 1/16W	
R116			RK73GB2A000J	CHIP R 0.0 J 1/10W	
R117			RK73HB1J103J	CHIP R 10K J 1/16W	
R119			RK73HB1J473J	CHIP R 47K J 1/16W	
R120			RK73HB1J104J	CHIP R 100K J 1/16W	
R121			RK73GB2A000J	CHIP R 0.0 J 1/10W	
R122			RK73HB1J683J	CHIP R 68K J 1/16W	
R123			RK73HB1J273J	CHIP R 27K J 1/16W	
R124			RK73HB1J332J	CHIP R 3.3K J 1/16W	
R125			RK73FB2B271J	CHIP R 270 J 1/8W	
R126,127			RK73FB2B390J	CHIP R 39 J 1/8W	
R129			RK73FB2B271J	CHIP R 270 J 1/8W	
R131			RK73HB1J331J	CHIP R 330 J 1/16W	
R132,133			RK73HB1J104J	CHIP R 100K J 1/16W	
R134			RK73HB1J274J	CHIP R 270K J 1/16W	
R136			RK73HB1J104J	CHIP R 100K J 1/16W	
R137			RK73HB1J334J	CHIP R 330K J 1/16W	
R138			RK73EB2E301J	CHIP R 300 J 1/4W	
R140			RK73HB1J104J	CHIP R 100K J 1/16W	
R141			RK73HB1J124J	CHIP R 120K J 1/16W	

PARTS LIST

TX-RX UNIT (X57-7390-11)

Ref. No.	Address	New parts	Parts No.	Description	Destination
R142			RK73HB1J104J	CHIP R 100K J 1/16W	
R143			RK73GB2A000J	CHIP R 0.0 J 1/10W	
R144			RK73HB1J824J	CHIP R 820K J 1/16W	
R145			RK73HB1J823J	CHIP R 82K J 1/16W	
R146,147			RK73HB1J104J	CHIP R 100K J 1/16W	
R148			RK73HB1J103J	CHIP R 10K J 1/16W	
R149			RK73HB1J104J	CHIP R 100K J 1/16W	
R150			RK73HB1J823J	CHIP R 82K J 1/16W	
R151			RK73HB1J124J	CHIP R 120K J 1/16W	
R152			R92-1061-05	JUMPER REST 0 OHM	
R153			RK73HB1J121J	CHIP R 120 J 1/16W	
R154			RK73EB2E301J	CHIP R 300 J 1/4W	
R156			RK73HB1J000J	CHIP R 0.0 J 1/16W	
R158			RK73HB1J000J	CHIP R 0.0 J 1/16W	
R160			RK73HB1J000J	CHIP R 0.0 J 1/16W	
R161			RK73HB1J332J	CHIP R 3.3K J 1/16W	
R201			RK73HB1J153J	CHIP R 15K J 1/16W	
R202,203			RK73HB1J223J	CHIP R 22K J 1/16W	
R204			RK73HB1J470J	CHIP R 47 J 1/16W	
R205,206			RK73HB1J223J	CHIP R 22K J 1/16W	
R207			RK73HB1J334J	CHIP R 330K J 1/16W	
R208			RK73HB1J153J	CHIP R 15K J 1/16W	
R209,210			RK73HB1J100J	CHIP R 10 J 1/16W	
R211			RK73HB1J102J	CHIP R 1.0K J 1/16W	
R212			RK73HB1J000J	CHIP R 0.0 J 1/16W	
R213			RK73HB1J102J	CHIP R 1.0K J 1/16W	
R215			RK73HB1J272J	CHIP R 2.7K J 1/16W	
R216			RK73HB1J000J	CHIP R 0.0 J 1/16W	
R218,219			RK73HB1J103J	CHIP R 10K J 1/16W	
R220			RK73HB1J473J	CHIP R 47K J 1/16W	
R221			RK73HB1J183J	CHIP R 18K J 1/16W	
R222			RK73HB1J222J	CHIP R 2.2K J 1/16W	
R223			RK73HB1J274J	CHIP R 270K J 1/16W	
R224			RK73HB1J103J	CHIP R 10K J 1/16W	
R225			RK73HB1J153J	CHIP R 15K J 1/16W	
R226			RK73HB1J473J	CHIP R 47K J 1/16W	
R227			RK73HB1J104J	CHIP R 100K J 1/16W	
R228			RK73HB1J223J	CHIP R 22K J 1/16W	
R229			RK73HB1J222J	CHIP R 2.2K J 1/16W	
R230			RK73HB1J223J	CHIP R 22K J 1/16W	
R231			RK73HB1J221J	CHIP R 220 J 1/16W	
R232			RK73HB1J101J	CHIP R 100 J 1/16W	
R234			RK73HB1J103J	CHIP R 10K J 1/16W	
R235			RK73HB1J000J	CHIP R 0.0 J 1/16W	
R237			RK73HB1J104J	CHIP R 100K J 1/16W	
R238			RK73HB1J103J	CHIP R 10K J 1/16W	
R239			RK73HB1J104J	CHIP R 100K J 1/16W	
R242			RK73HB1J221J	CHIP R 220 J 1/16W	
R243			RK73HB1J101J	CHIP R 100 J 1/16W	
R244			RK73HB1J000J	CHIP R 0.0 J 1/16W	
R245,246			RK73HB1J104J	CHIP R 100K J 1/16W	
R248			RK73HB1J474J	CHIP R 470K J 1/16W	
R250			RK73HB1J000J	CHIP R 0.0 J 1/16W	
R256			RK73HB1J181J	CHIP R 180 J 1/16W	
R257			RK73HB1J000J	CHIP R 0.0 J 1/16W	
R261			RK73HB1J472J	CHIP R 4.7K J 1/16W	
R262			RK73HB1J682J	CHIP R 6.8K J 1/16W	
R263			RK73HB1J000J	CHIP R 0.0 J 1/16W	
R265			RK73HB1J103J	CHIP R 10K J 1/16W	
R266			RK73HB1J222J	CHIP R 2.2K J 1/16W	
R267			RK73HB1J271J	CHIP R 270 J 1/16W	
R268,269			RK73HB1J470J	CHIP R 47 J 1/16W	
R270			RK73HB1J680J	CHIP R 68 J 1/16W	
R271			RK73HB1J222J	CHIP R 2.2K J 1/16W	
R272			RK73HB1J271J	CHIP R 270 J 1/16W	
R273			RK73HB1J180J	CHIP R 18 J 1/16W	
R274			RK73HB1J102J	CHIP R 1.0K J 1/16W	
R275			RK73HB1J271J	CHIP R 270 J 1/16W	
R276			RK73HB1J102J	CHIP R 1.0K J 1/16W	
R277			RK73GB2A000J	CHIP R 0.0 J 1/10W	
R279			RK73HB1J000J	CHIP R 0.0 J 1/16W	
R282			RK73HB1J000J	CHIP R 0.0 J 1/16W	
R283,284			RK73HB1J104J	CHIP R 100K J 1/16W	
R285			RK73HB1J103J	CHIP R 10K J 1/16W	
R286,287			RK73HB1J104J	CHIP R 100K J 1/16W	
R288			RK73HB1J101J	CHIP R 100 J 1/16W	
R289			RK73HB1J104J	CHIP R 100K J 1/16W	
R290			RK73HB1J274J	CHIP R 270K J 1/16W	
R291			RK73HB1J104J	CHIP R 100K J 1/16W	
R294			RK73HB1J000J	CHIP R 0.0 J 1/16W	
R296			RK73HB1J103J	CHIP R 10K J 1/16W	
R297			RK73HB1J000J	CHIP R 0.0 J 1/16W	
R299			RK73HB1J221J	CHIP R 220 J 1/16W	
R301			RK73HB1J564J	CHIP R 560K J 1/16W	
R302,303			RK73HB1J104J	CHIP R 100K J 1/16W	
R306,307			RK73HB1J183J	CHIP R 18K J 1/16W	
R310			RK73HB1J000J	CHIP R 0.0 J 1/16W	
R313			RK73GB2A000J	CHIP R 0.0 J 1/10W	
R314			RK73HB1J000J	CHIP R 0.0 J 1/16W	
R315,316			RK73HB1J104J	CHIP R 100K J 1/16W	
R317			RK73HB1J000J	CHIP R 0.0 J 1/16W	
R320,321			RK73HB1J000J	CHIP R 0.0 J 1/16W	
R324,325			RK73HB1J182J	CHIP R 1.8K J 1/16W	
R327			RK73HB1J332J	CHIP R 3.3K J 1/16W	
R328			RK73HB1J102J	CHIP R 1.0K J 1/16W	
R329			RK73HB1J562J	CHIP R 5.6K J 1/16W	
R330			RK73GB2A100J	CHIP R 10 J 1/10W	
R331			RK73HB1J473J	CHIP R 47K J 1/16W	
R332			RK73HB1J000J	CHIP R 0.0 J 1/16W	
R333			RK73HB1J102J	CHIP R 1.0K J 1/16W	
R334			RK73HB1J000J	CHIP R 0.0 J 1/16W	
R338			RK73HB1J103J	CHIP R 10K J 1/16W	
R339			RK73HB1J470J	CHIP R 47 J 1/16W	
R340,341			RK73HB1J121J	CHIP R 120 J 1/16W	
R342,343			RK73HB1J000J	CHIP R 0.0 J 1/16W	
R344			RK73HB1J152J	CHIP R 1.5K J 1/16W	
R345			RK73HB1J000J	CHIP R 0.0 J 1/16W	
R346			RK73HB1J223J	CHIP R 22K J 1/16W	
R352,353			RK73HB1J000J	CHIP R 0.0 J 1/16W	
R401			RK73HH1J105D	CHIP R 1.0M D 1/16W	
R402			RK73HB1J471J	CHIP R 470 J 1/16W	
R403			RK73HH1J104D	CHIP R 100K D 1/16W	
R404			RK73HB1J103J	CHIP R 10K J 1/16W	
R405			RK73HH1J274D	CHIP R 270K D 1/16W	
R406			RK73HH1J104D	CHIP R 100K D 1/16W	
R407			RK73HB1J473J	CHIP R 47K J 1/16W	
R408			RK73HB1J103J	CHIP R 10K J 1/16W	
R409			RK73HB1J683J	CHIP R 68K J 1/16W	

PARTS LIST

TX-RX UNIT (X57-7390-11)

Ref. No.	Address	New parts	Parts No.	Description	Destination
R410			RK73HB1J684J	CHIP R 680K J 1/16W	
R411			RK73HB1J104J	CHIP R 100K J 1/16W	
R413			RK73HB1J474J	CHIP R 470K J 1/16W	
R415			RK73HB1J332J	CHIP R 3.3K J 1/16W	
R417			RK73HB1J473J	CHIP R 47K J 1/16W	
R418,419			RK73HB1J103J	CHIP R 10K J 1/16W	
R420			RK73HB1J473J	CHIP R 47K J 1/16W	
R421			RK73HB1J474J	CHIP R 470K J 1/16W	
R422			RK73HB1J103J	CHIP R 10K J 1/16W	
R423-425			RK73GB2A472J	CHIP R 4.7K J 1/10W	
R426			RK73HB1J474J	CHIP R 470K J 1/16W	
R428,429			RK73HB1J103J	CHIP R 10K J 1/16W	
R430			RK73HH1J124D	CHIP R 120K D 1/16W	
R431			RK73HH1J183D	CHIP R 18K D 1/16W	
R432			RK73HH1J223D	CHIP R 22K D 1/16W	
R433			RK73HB1J102J	CHIP R 1.0K J 1/16W	
R434			RK73HB1J330J	CHIP R 33 J 1/16W	
R435			RK73GB2A100J	CHIP R 10 J 1/10W	
R436			RK73HB1J000J	CHIP R 0.0 J 1/16W	
R437			RK73HB1J474J	CHIP R 470K J 1/16W	
R438			RK73HB1J154J	CHIP R 150K J 1/16W	
R440			RK73HB1J102J	CHIP R 1.0K J 1/16W	
R441			RK73HB1J123J	CHIP R 12K J 1/16W	
R442			RK73HH1J334D	CHIP R 330K D 1/16W	
R443			RK73HH1J223D	CHIP R 22K D 1/16W	
R444			RK73HB1J272J	CHIP R 2.7K J 1/16W	
R445			RK73HB1J473J	CHIP R 47K J 1/16W	
R446			RK73GB2A100J	CHIP R 10 J 1/10W	
R447			RK73HB1J473J	CHIP R 47K J 1/16W	
R448			RK73HB1J000J	CHIP R 0.0 J 1/16W	
R449			RK73GB2A220J	CHIP R 22 J 1/10W	
R450			RK73HB1J000J	CHIP R 0.0 J 1/16W	
R501			RK73HB1J104J	CHIP R 100K J 1/16W	
R503			RK73HB1J102J	CHIP R 1.0K J 1/16W	
R504			RK73HB1J104J	CHIP R 100K J 1/16W	
R506			RK73HB1J474J	CHIP R 470K J 1/16W	
R507			RK73HB1J000J	CHIP R 0.0 J 1/16W	
R509			RK73HB1J000J	CHIP R 0.0 J 1/16W	
R510			RK73HB1J474J	CHIP R 470K J 1/16W	
R511			RK73HB1J220J	CHIP R 22 J 1/16W	
R512			RK73HB1J104J	CHIP R 100K J 1/16W	
R514			RK73HB1J000J	CHIP R 0.0 J 1/16W	
R515,516			RK73HB1J104J	CHIP R 100K J 1/16W	
R520,521			RK73HB1J473J	CHIP R 47K J 1/16W	
R522			RK73HB1J474J	CHIP R 470K J 1/16W	
R523			RK73HB1J473J	CHIP R 47K J 1/16W	
R524			RK73HB1J000J	CHIP R 0.0 J 1/16W	
R525			RK73HB1J104J	CHIP R 100K J 1/16W	
R527			RK73HB1J104J	CHIP R 100K J 1/16W	
R528,529			RK73HB1J000J	CHIP R 0.0 J 1/16W	
R531			RK73HB1J104J	CHIP R 100K J 1/16W	
R532			RK73HB1J101J	CHIP R 100 J 1/16W	
R533,534			RK73HB1J000J	CHIP R 0.0 J 1/16W	
R536,537			RK73HB1J000J	CHIP R 0.0 J 1/16W	
R538			RK73HB1J101J	CHIP R 100 J 1/16W	
R539			RK73HB1J000J	CHIP R 0.0 J 1/16W	
R540,541			RK73HB1J101J	CHIP R 100 J 1/16W	
R542			RK73HB1J104J	CHIP R 100K J 1/16W	
R543			RK73HB1J000J	CHIP R 0.0 J 1/16W	

Ref. No.	Address	New parts	Parts No.	Description	Destination
R544			RK73HB1J104J	CHIP R 100K J 1/16W	
R545			RK73HB1J000J	CHIP R 0.0 J 1/16W	
R548			RK73GB2A000J	CHIP R 0.0 J 1/10W	
R550			RK73GB2A000J	CHIP R 0.0 J 1/10W	
R551			RK73HB1J101J	CHIP R 100 J 1/16W	
R552-554			RK73HB1J104J	CHIP R 100K J 1/16W	
R556-558			RK73HB1J104J	CHIP R 100K J 1/16W	
R560			RK73HB1J000J	CHIP R 0.0 J 1/16W	
R561			RK73HB1J473J	CHIP R 47K J 1/16W	
R562			RK73GB2A000J	CHIP R 0.0 J 1/10W	
R565			RK73GB2A000J	CHIP R 0.0 J 1/10W	
R567			RK73HB1J151J	CHIP R 150 J 1/16W	
R568			RK73HB1J102J	CHIP R 1.0K J 1/16W	
R569			RK73HB1J220J	CHIP R 22 J 1/16W	
R572			RK73HB1J220J	CHIP R 22 J 1/16W	
R574			RK73GB2A000J	CHIP R 0.0 J 1/10W	
R575			RK73HB1J103J	CHIP R 10K J 1/16W	
R576			RK73HB1J000J	CHIP R 0.0 J 1/16W	
R577			RK73HB1J102J	CHIP R 1.0K J 1/16W	
R578-580			RK73HB1J000J	CHIP R 0.0 J 1/16W	
R581			RK73HB1J474J	CHIP R 470K J 1/16W	
R582-586			RK73HB1J000J	CHIP R 0.0 J 1/16W	
R587			RK73HB1J102J	CHIP R 1.0K J 1/16W	
R588-590			RK73HB1J000J	CHIP R 0.0 J 1/16W	
R591			RK73HB1J102J	CHIP R 1.0K J 1/16W	
R592,593			RK73HB1J000J	CHIP R 0.0 J 1/16W	
R594			RK73HB1J102J	CHIP R 1.0K J 1/16W	
R595			RK73HB1J000J	CHIP R 0.0 J 1/16W	
R596			RK73HB1J104J	CHIP R 100K J 1/16W	
R597			RK73HB1J102J	CHIP R 1.0K J 1/16W	
R598-601			RK73FB2B102J	CHIP R 1.0K J 1/8W	
R602			RK73HB1J102J	CHIP R 1.0K J 1/16W	
R603,604			RK73HB1J000J	CHIP R 0.0 J 1/16W	
R605			RK73HB1J102J	CHIP R 1.0K J 1/16W	
R606			RK73HB1J103J	CHIP R 10K J 1/16W	
R607,608			RK73HB1J102J	CHIP R 1.0K J 1/16W	
R610			RK73HB1J102J	CHIP R 1.0K J 1/16W	
R611,612			RK73HB1J105J	CHIP R 1.0M J 1/16W	
R614			RK73HB1J474J	CHIP R 470K J 1/16W	
R615,616			RK73HB1J000J	CHIP R 0.0 J 1/16W	
R617-620			RK73HB1J102J	CHIP R 1.0K J 1/16W	
R621,622			RK73HB1J000J	CHIP R 0.0 J 1/16W	
R623-625			RK73HB1J104J	CHIP R 100K J 1/16W	
R627,628			RK73HB1J104J	CHIP R 100K J 1/16W	
R629			RK73HB1J105J	CHIP R 1.0M J 1/16W	
R630			RK73HB1J102J	CHIP R 1.0K J 1/16W	
R632			RK73HB1J103J	CHIP R 10K J 1/16W	
R633			RK73HB1J000J	CHIP R 0.0 J 1/16W	
R634			RK73HB1J103J	CHIP R 10K J 1/16W	
R636			RK73HB1J000J	CHIP R 0.0 J 1/16W	
R637			RK73HB1J103J	CHIP R 10K J 1/16W	
R638			RK73HB1J104J	CHIP R 100K J 1/16W	
R639			RK73HB1J102J	CHIP R 1.0K J 1/16W	
R640			RK73HB1J103J	CHIP R 10K J 1/16W	
R641,642			RK73HB1J104J	CHIP R 100K J 1/16W	
R644			RK73GB2A000J	CHIP R 0.0 J 1/10W	
R646			RK73HB1J682J	CHIP R 6.8K J 1/16W	
R648			RK73HB1J682J	CHIP R 6.8K J 1/16W	
R650			RK73GB2A000J	CHIP R 0.0 J 1/10W	
R651			RK73FB2B102J	CHIP R 1.0K J 1/8W	

PARTS LIST

TX-RX UNIT (X57-7390-11)

Ref. No.	Address	New parts	Parts No.	Description	Destination
R652			RK73HB1J104J	CHIP R 100K J 1/16W	
R654			RK73GB2A000J	CHIP R 0.0 J 1/10W	
R656			RK73HB1J471J	CHIP R 470 J 1/16W	
R658			RK73GB2A000J	CHIP R 0.0 J 1/10W	
R659-661			RK73HB1J104J	CHIP R 100K J 1/16W	
R662,663			RK73HB1J474J	CHIP R 470K J 1/16W	
R664-674			RK73HB1J104J	CHIP R 100K J 1/16W	
R676			RK73HB1J104J	CHIP R 100K J 1/16W	
R677			RK73HB1J474J	CHIP R 470K J 1/16W	
R678			RK73HB1J104J	CHIP R 100K J 1/16W	
R680-683			RK73HB1J000J	CHIP R 0.0 J 1/16W	
R684-686			RK73HB1J104J	CHIP R 100K J 1/16W	
R687,688			RK73HB1J472J	CHIP R 4.7K J 1/16W	
R689,690			RK73HB1J474J	CHIP R 470K J 1/16W	
R691-696			RK73HB1J104J	CHIP R 100K J 1/16W	
R697,698			RK73HB1J000J	CHIP R 0.0 J 1/16W	
R701			RK73HB1J104J	CHIP R 100K J 1/16W	
R703			RK73HB1J103J	CHIP R 10K J 1/16W	
R704			RK73HB1J563J	CHIP R 56K J 1/16W	
R705			RK73HB1J104J	CHIP R 100K J 1/16W	
R706			RK73HB1J683J	CHIP R 68K J 1/16W	
R707			RK73HB1J153J	CHIP R 15K J 1/16W	
R708			RK73HB1J683J	CHIP R 68K J 1/16W	
R709			RK73HB1J822J	CHIP R 8.2K J 1/16W	
R710			RK73HB1J104J	CHIP R 100K J 1/16W	
R712			RK73HB1J683J	CHIP R 68K J 1/16W	
R713			RK73HB1J563J	CHIP R 56K J 1/16W	
R714			RK73HB1J104J	CHIP R 100K J 1/16W	
R715			RK73HB1J473J	CHIP R 47K J 1/16W	
R716			RK73HB1J000J	CHIP R 0.0 J 1/16W	
R717			RK73HB1J473J	CHIP R 47K J 1/16W	
R718			RK73HB1J000J	CHIP R 0.0 J 1/16W	
R720			RK73HB1J104J	CHIP R 100K J 1/16W	
R721			RK73HB1J222J	CHIP R 2.2K J 1/16W	
R722			RK73HB1J683J	CHIP R 68K J 1/16W	
R724			RK73HB1J563J	CHIP R 56K J 1/16W	
R725			RK73HB1J683J	CHIP R 68K J 1/16W	
R726			RK73HB1J100J	CHIP R 10 J 1/16W	
R727			RK73HB1J274J	CHIP R 270K J 1/16W	
R728			RK73HB1J000J	CHIP R 0.0 J 1/16W	
R729			RK73HB1J104J	CHIP R 100K J 1/16W	
R730			RK73HB1J103J	CHIP R 10K J 1/16W	
R731			RK73HB1J000J	CHIP R 0.0 J 1/16W	
R732			RK73HB1J473J	CHIP R 47K J 1/16W	
R733			RK73HB1J333J	CHIP R 33K J 1/16W	
R734			RK73HB1J223J	CHIP R 22K J 1/16W	
R737			RK73HB1J473J	CHIP R 47K J 1/16W	
R738			RK73HB1J102J	CHIP R 1.0K J 1/16W	
R739			RK73HB1J000J	CHIP R 0.0 J 1/16W	
R740,741			RK73HB1J104J	CHIP R 100K J 1/16W	
R744			RK73HB1J473J	CHIP R 47K J 1/16W	
R745			RK73HB1J104J	CHIP R 100K J 1/16W	
R746			RK73HB1J103J	CHIP R 10K J 1/16W	
R747			RK73HB1J334J	CHIP R 330K J 1/16W	
R748			RK73HB1J000J	CHIP R 0.0 J 1/16W	
R749			RK73HB1J823J	CHIP R 82K J 1/16W	
R750			RK73HB1J332J	CHIP R 3.3K J 1/16W	
R751			RK73HB1J271J	CHIP R 270 J 1/16W	
R752			RK73HB1J102J	CHIP R 1.0K J 1/16W	
R753			RK73HB1J563J	CHIP R 56K J 1/16W	

Ref. No.	Address	New parts	Parts No.	Description	Destination
R755			RK73HB1J103J	CHIP R 10K J 1/16W	
R756			RK73HB1J153J	CHIP R 15K J 1/16W	
R758			RK73HB1J103J	CHIP R 10K J 1/16W	
R759			RK73HB1J104J	CHIP R 100K J 1/16W	
R760			RK73HB1J152J	CHIP R 1.5K J 1/16W	
R761			RK73HB1J104J	CHIP R 100K J 1/16W	
R762			RK73HB1J474J	CHIP R 470K J 1/16W	
R763			RK73HB1J183J	CHIP R 18K J 1/16W	
R764			RK73HB1J124J	CHIP R 120K J 1/16W	
R765			RK73HB1J102J	CHIP R 1.0K J 1/16W	
R766			RK73HB1J104J	CHIP R 100K J 1/16W	
R767,768			RK73HB1J473J	CHIP R 47K J 1/16W	
R769			RK73HB1J472J	CHIP R 4.7K J 1/16W	
R770			RK73HB1J563J	CHIP R 56K J 1/16W	
R771			RK73HB1J104J	CHIP R 100K J 1/16W	
R772			RK73HB1J123J	CHIP R 12K J 1/16W	
R773			RK73HB1J684J	CHIP R 680K J 1/16W	
R774			RK73HB1J474J	CHIP R 470K J 1/16W	
R775			RK73HB1J823J	CHIP R 82K J 1/16W	
R776			RK73HB1J334J	CHIP R 330K J 1/16W	
R777			RK73HB1J154J	CHIP R 150K J 1/16W	
R778			RK73HB1J394J	CHIP R 390K J 1/16W	
R779			RK73HB1J474J	CHIP R 470K J 1/16W	
R780,781			RK73HB1J104J	CHIP R 100K J 1/16W	
R782			RK73HB1J153J	CHIP R 15K J 1/16W	
R783			RK73HB1J000J	CHIP R 0.0 J 1/16W	
R784			RK73HB1J154J	CHIP R 150K J 1/16W	
R785			RK73HB1J103J	CHIP R 10K J 1/16W	
R786			RK73HB1J393J	CHIP R 39K J 1/16W	
R787			RK73HB1J274J	CHIP R 270K J 1/16W	
R788			RK73HB1J223J	CHIP R 22K J 1/16W	
R789			RK73HB1J000J	CHIP R 0.0 J 1/16W	
R790			RK73HB1J224J	CHIP R 220K J 1/16W	
R791			RK73HB1J564J	CHIP R 560K J 1/16W	
R792			RK73HB1J102J	CHIP R 1.0K J 1/16W	
R793,794			RK73HB1J000J	CHIP R 0.0 J 1/16W	
R795			RK73HB1J224J	CHIP R 220K J 1/16W	
R796			RK73HB1J103J	CHIP R 10K J 1/16W	
R797			RK73HB1J334J	CHIP R 330K J 1/16W	
R798			RK73HB1J684J	CHIP R 680K J 1/16W	
R799			RK73HB1J563J	CHIP R 56K J 1/16W	
R800			RK73HB1J472J	CHIP R 4.7K J 1/16W	
R801			RK73HB1J104J	CHIP R 100K J 1/16W	
R802			RK73HB1J273J	CHIP R 27K J 1/16W	
R803			RK73HB1J153J	CHIP R 15K J 1/16W	
R804			RK73HB1J681J	CHIP R 680 J 1/16W	
R805			RK73HB1J823J	CHIP R 82K J 1/16W	
R806			RK73HB1J562J	CHIP R 5.6K J 1/16W	
R807,808			RK73HB1J103J	CHIP R 10K J 1/16W	
R809			RK73HB1J104J	CHIP R 100K J 1/16W	
R810			RK73HB1J102J	CHIP R 1.0K J 1/16W	
R812,813			RK73HB1J472J	CHIP R 4.7K J 1/16W	
R814-816			RK73HB1J104J	CHIP R 100K J 1/16W	
R817			RK73HB1J473J	CHIP R 47K J 1/16W	
R818			RK73HB1J333J	CHIP R 33K J 1/16W	
R819			RK73HB1J000J	CHIP R 0.0 J 1/16W	
R820			RK73HB1J474J	CHIP R 470K J 1/16W	
R821			RK73HB1J000J	CHIP R 0.0 J 1/16W	
R822			RK73HB1J101J	CHIP R 100 J 1/16W	
R823			RK73HB1J472J	CHIP R 4.7K J 1/16W	

PARTS LIST

TX-RX UNIT (X57-7390-11)

Ref. No.	Address	New parts	Parts No.	Description	Destination
R825,826			RK73HB1J103J	CHIP R 10K J 1/16W	
R827			RK73HB1J332J	CHIP R 3.3K J 1/16W	
R828			RK73HB1J000J	CHIP R 0.0 J 1/16W	
R831			RK73HB1J000J	CHIP R 0.0 J 1/16W	
R833-835			RK73HB1J101J	CHIP R 100 J 1/16W	
R836			RK73HB1J000J	CHIP R 0.0 J 1/16W	
R837			RK73HB1J472J	CHIP R 4.7K J 1/16W	
R838			RK73HB1J000J	CHIP R 0.0 J 1/16W	
R841			RK73HB1J000J	CHIP R 0.0 J 1/16W	
R842			RK73FB2B102J	CHIP R 1.0K J 1/8W	
R843			RK73HB1J471J	CHIP R 470 J 1/16W	
R845			RK73HB1J102J	CHIP R 1.0K J 1/16W	
R846			RK73HB1J332J	CHIP R 3.3K J 1/16W	
R901			RK73GB2A471J	CHIP R 470 J 1/10W	
R902,903			RK73HB1J101J	CHIP R 100 J 1/16W	
R904-913			RK73HB1J471J	CHIP R 470 J 1/16W	
R914			RK73GB2A471J	CHIP R 470 J 1/10W	
R915-917			RK73HB1J000J	CHIP R 0.0 J 1/16W	
R918,919			RK73HB1J101J	CHIP R 100 J 1/16W	
R921			RK73HB1J474J	CHIP R 470K J 1/16W	
D2			DA221	DIODE	
D3 ,4			1SV325F	VARIABLE CAPACITANCE DIODE	
D7 -12			1SV282-F	VARIABLE CAPACITANCE DIODE	
D14			1SV278F	VARIABLE CAPACITANCE DIODE	
D21			HVC131	DIODE	
D101			HVC131	DIODE	
D102			02DZ5.6F-X,Y	ZENER DIODE	
D103			L407CDB	DIODE (50V/1W)	
D106			L7091CER	DIODE	
D108-110			HSM88AS-E	DIODE	
D201,202			DAN235E	DIODE	
D205			HVC131	DIODE	
D207-210			1SV286F	VARIABLE CAPACITANCE DIODE	
D212,213			1SV286F	VARIABLE CAPACITANCE DIODE	
D216			HVC131	DIODE	
D401			02DZ18F-X,Y	ZENER DIODE	
D403			1SS416	DIODE	
D404			22ZR-10D	SURGE ABSORBER	
D405			DSA3A1	DIODE	
D406			HSC119	DIODE	
D407		*	CRS02-Q	DIODE	
D408			1SS301F	DIODE	
D409-412			1SS388F	DIODE	
D501,502			1SS388F	DIODE	
D503,504			1SS416	DIODE	
D506,507			1SS416	DIODE	
D508			DA204U	DIODE	
D509,510			1SS416	DIODE	
D511,512			DA204U	DIODE	
D702			HSC119	DIODE	
D703-705			RB706F-40	DIODE	
D706,707			EMZ6.8N	ZENER DIODE	
D901-904			DA204U	DIODE	
D905,906			02DZ18F-X,Y	ZENER DIODE	
D907,908			DA204U	DIODE	
D909			1SS355	DIODE	
D910			02DZ18F-X,Y	ZENER DIODE	
D911,912			DA204U	DIODE	
D913			1SS355	DIODE	
D914			02DZ18F-X,Y	ZENER DIODE	

Ref. No.	Address	New parts	Parts No.	Description	Destination
IC1			LM73CIMKX-0	MOS-IC	
IC2			LMC7101BIM5	MOS-IC	
IC3			**Note 1**	MOS-IC	
IC4			LMC7101BIM5	MOS-IC	
IC5			TC75W51FK(F)	MOS-IC	
IC101			NJM2904V-ZB	MOS-IC	
IC102			RA30H4452M123	MOS-IC	
IC103			NJM2904V-ZB	MOS-IC	
IC201			MCP6021-E/OT	MOS-IC	
IC202			TK10931VTL-G	ANALOGUE IC	
IC203			TC75W51FK(F)	MOS-IC	
IC204			SPM5001	MOS-IC	
IC205,206			LMC7101BIM5	MOS-IC	
IC401		*	XC6108C23CMN	MOS-IC	
IC402		*	XC6204B332P1	ANALOGUE IC	
IC403		*	NJM78M08FA-ZB	ANALOGUE IC	
IC404			TA7805FQ	MOS-IC	
IC405			LT1616ES6-PBF	ANALOGUE IC	
IC406			TK71733S	BI-POLAR IC	
IC407,408			XC6204B332M	MOS-IC	
IC409			XC6205B152PRN	ANALOGUE IC	
IC410			XC9101D09AKR	ANALOGUE IC	
IC501		*	**Note 1(BGA)**	ROM IC	
IC502			**Note 1(BGA)**	MICROPROCESSOR IC	
IC503		*	**Note 1(BGA)**	SRAM IC	
IC504			RV5C386A	MOS-IC	
IC505			TC7SH08FU-F	MOS-IC	
IC506			XC6109C29ANN	ANALOGUE IC	
IC507			TC7SH126FU-F	MOS-IC	
IC508			SM5023CNDH-G	MOS-IC	
IC509			TC7WT125FUF	MOS-IC	
IC510		*	**Note 1(BGA)**	MOS-IC	
IC511			TC7SH08FU-F	MOS-IC	
IC512,513			TC7SET08FU-F	MOS-IC	
IC514			TC7WBD125AFK	MOS-IC	
IC515			TC7WT126FU-F	MOS-IC	
IC516			TC7WH126FU-F	MOS-IC	
IC517			**Note 1**	MOS-IC	
IC518			ADM202EARNZ	MOS-IC	
IC701			TC75S51FE(F)	MOS-IC	
IC702,703			TC75W51FK(F)	MOS-IC	
IC704			MCP6021-E/OT	MOS-IC	
IC705,706			TC75W51FK(F)	MOS-IC	
IC707,708			TC7W53FK(F)	MOS-IC	
IC709			TC75W51FK(F)	MOS-IC	
IC710			TC7W53FK(F)	MOS-IC	
IC711			TC75W51FK(F)	MOS-IC	
IC712			M62364FP-F	MOS-IC	
IC713			TC7W53FK(F)	MOS-IC	
IC714			TC75S51FE(F)	MOS-IC	
IC715			LA4425A	MOS-IC	
Q1			2SC5383-T111	TRANSISTOR	
Q3			2SC5636	TRANSISTOR	
Q4			2SC5383-T111	TRANSISTOR	
Q5 ,6			2SK508NV(K52)	FET	
Q7			SSM6L05FU-F	FET	
Q8			2SJ347F	FET	
Q9 ,10			2SC5636	TRANSISTOR	
Q11			2SK1215-E(E)	FET	

- **Note 1 : This part cannot be replaced. Therefore, this part is not supplied as a service part.**
- **If a part reference number is listed in a shaded box, that part does not come with the PCB.**

PARTS LIST

TX-RX UNIT (X57-7390-11)

Ref. No.	Address	New parts	Parts No.	Description	Destination
Q101			2SC5108(Y)F	TRANSISTOR	
Q102		*	2SC5455-A	TRANSISTOR	
Q105			DTC114EE	DIGITAL TRANSISTOR	
Q106			2SK1830F	FET	
Q201			DTA114EE	DIGITAL TRANSISTOR	
Q202			DTC144EE	DIGITAL TRANSISTOR	
Q203			2SC5636	TRANSISTOR	
Q204,205			2SC3356(R23)	TRANSISTOR	
Q208			2SC5636	TRANSISTOR	
Q210			2SC3357-A	TRANSISTOR	
Q212			EMD9	TRANSISTOR	
Q401,402			DTC114EE	DIGITAL TRANSISTOR	
Q403			DTC114TE	DIGITAL TRANSISTOR	
Q404			2SJ645	FET	
Q405			2SA1955A-F	TRANSISTOR	
Q406			UPA672T-A	FET	
Q407-409			12A02CH	TRANSISTOR	
Q410			SSM3K15TE(F)	FET	
Q411,412			2SA1955A-F	TRANSISTOR	
Q413-415			DTC114EE	DIGITAL TRANSISTOR	
Q416			SSM6L05FU-F	FET	
Q417			SSM5H01TU	FET	
Q501			UPA672T-A	FET	
Q701			SSM3K15TE(F)	FET	
Q702			2SC4617(Q)	TRANSISTOR	
Q703			SSM3K15TE(F)	FET	
Q704			2SC4738(GR)F	TRANSISTOR	
Q705			2SA1832(GR)F	TRANSISTOR	
Q706,707			2SJ243-A	FET	
Q708			2SA1832(GR)F	TRANSISTOR	
Q709			DTC114EE	DIGITAL TRANSISTOR	
Q710			DTC363EU	DIGITAL TRANSISTOR	
Q901,902		*	QSX6	TRANSISTOR	
TH101,102			ERTJ0EV104H	THERMISTOR	
TH701			ERTJ0EV104H	THERMISTOR	

Ref. No.	Address	New parts	Parts No.	Description	Destination

EXPLODED VIEW

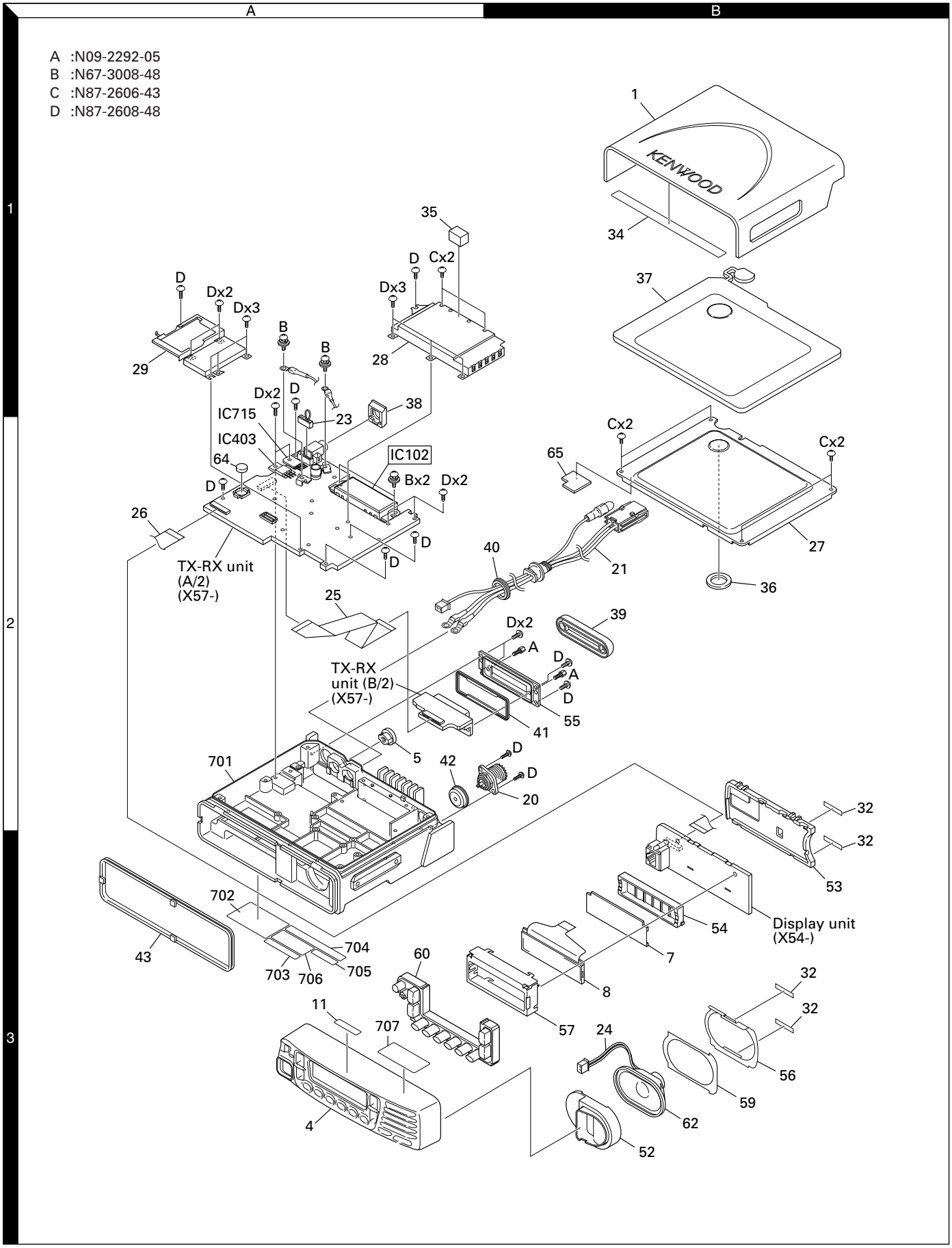

Parts with the exploded numbers larger than 700 are not supplied.

If a part reference number is listed in a box on the exploded view of the PCB, that part does not come with the PCB. These parts must be ordered separately.

PACKING

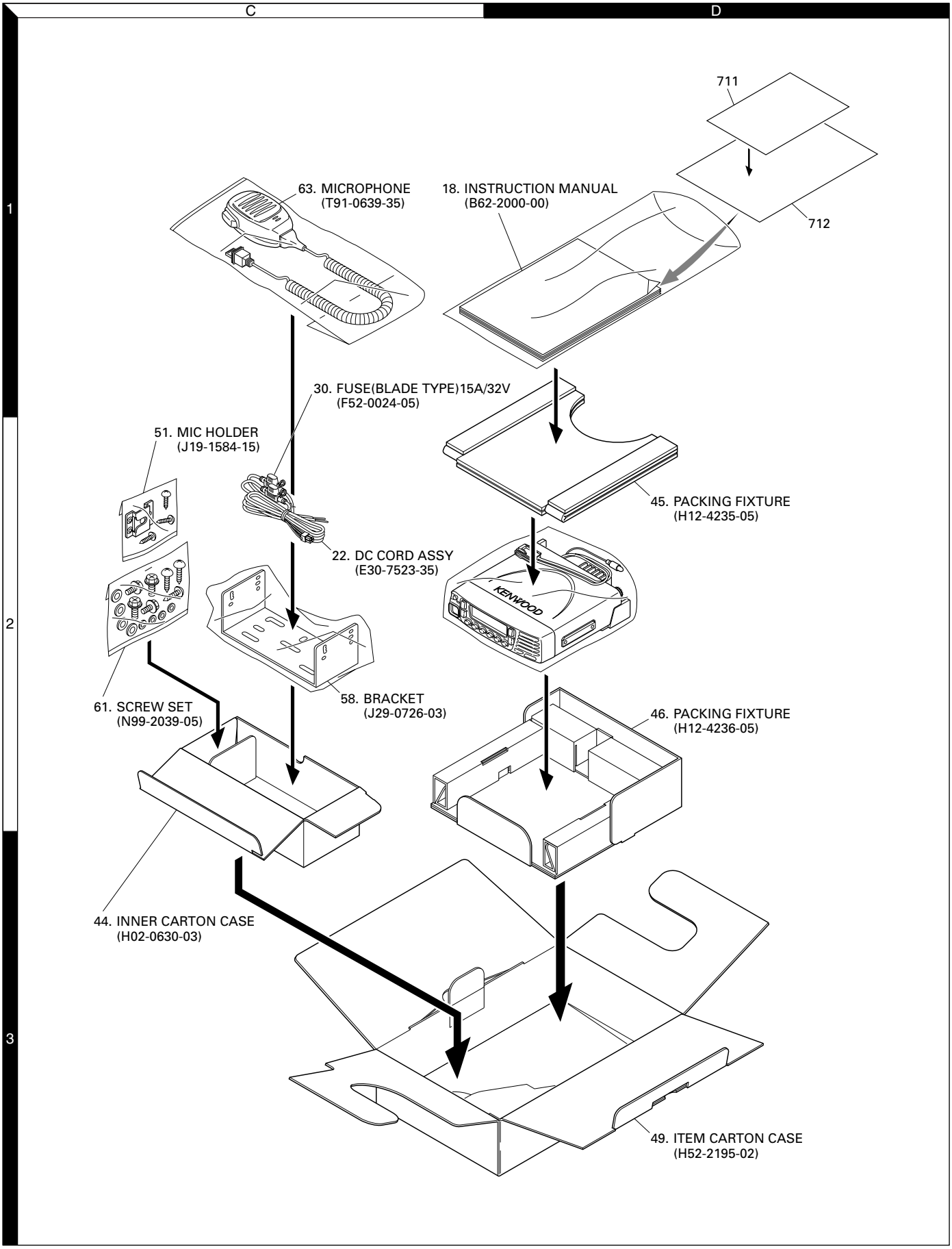

Parts with the exploded numbers larger than 700 are not supplied.

TROUBLE SHOOTING

Fault diagnosis of the BGA (Ball Grid Array) IC

Overview: A flowchart for determining whether or not the transceiver can be powered on (the LCD does not function even if the power switch is turned on) due to broken BGA parts.

BGA parts: ASIC (IC510), DSP (IC502), FLASH (IC501), SRAM (IC503)

When the BGA IC is problematic, please bring the printed circuit board (X57-7390-11) in for service. Various ESN/default adjustment values are written on the printed circuit board for service. Additionally various ESN stickers are included. The power module (RA30H4452M123), short connector (E37-1180-05) and button type lithium battery (W09-0971-05) do not belong to the printed circuit board for service. Please use the part which has been attached to the printed circuit board. After the printed circuit board has been readjusted, please attach any ESN stickers to the chassis. When "ESN Validation" is used with NXDN Trunking, you must modify the ESN register.

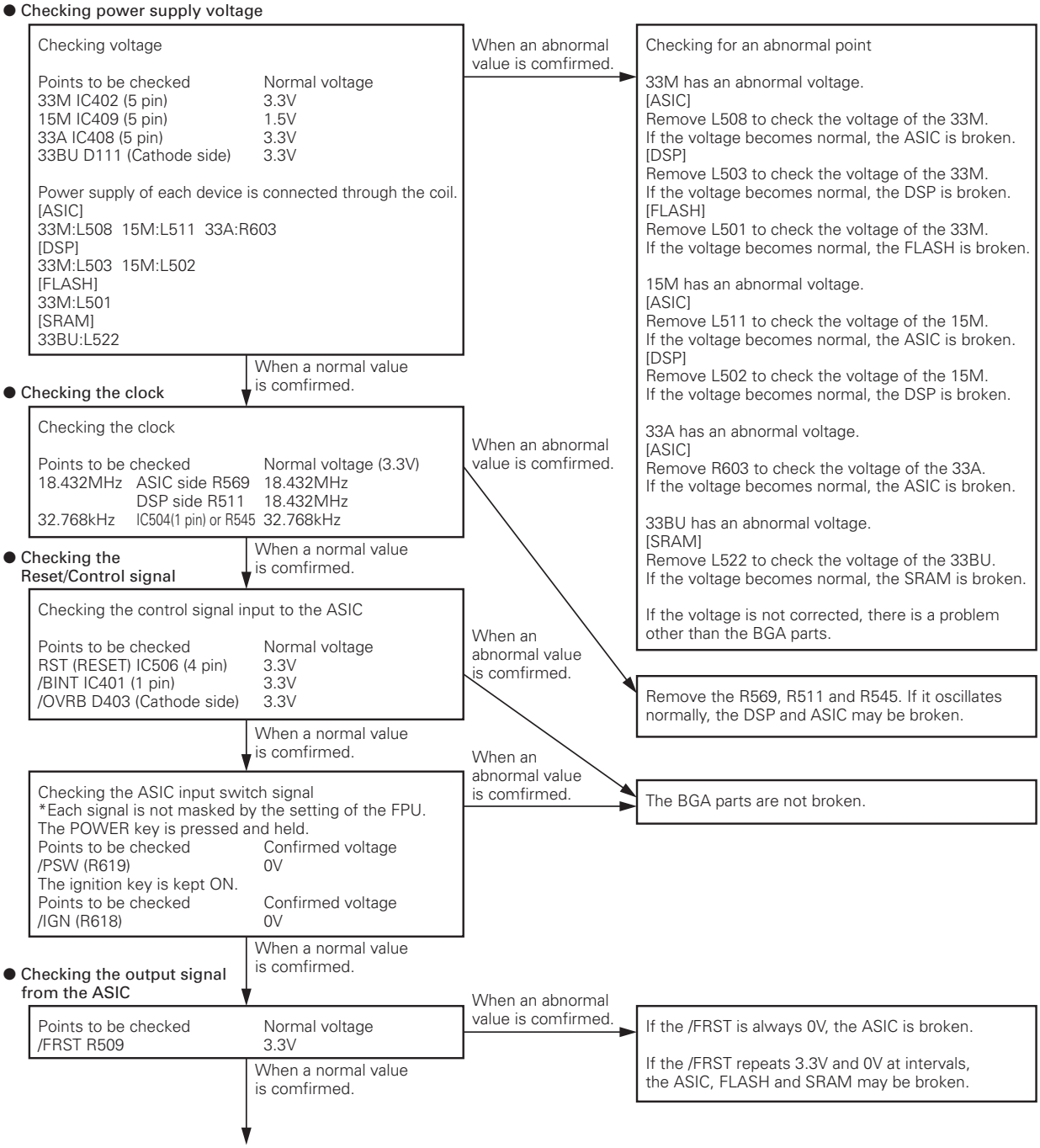

TROUBLE SHOOTING

● Checking the signal output from the ASIC by software control

When a normal value is comfirmed.

Points to be checked	Normal voltage
SBC R408	3.3V

When an abnormal value is comfirmed. → Remove R408. If the ASIC side is 0V, the ASIC/FALSH/SRAM may be broken.

When a normal value is comfirmed.

Points to be checked	Normal voltage
/DRST R841	3.3V

When an abnormal value is comfirmed. → If the /DRST is 0V, the ASIC/FALSH/SRAM are broken.

When a normal value is comfirmed.

● Panel control (TX-RX unit)

Points to be checked	Normal voltage
/PRST R506 (Signal side)	3.3V

When an abnormal value is comfirmed. → Remove the Q501. If the ASIC side is 0V, the ASIC/FALSH/SRAM may be broken.

When a normal value is comfirmed.

Points to be checked	Normal voltage
80C C581 (Signal side)	8.0V

When an abnormal value is comfirmed. → If the SBC is 3.3V and 80C regulator $IC403 (pin 1) input side is 8.5V or more, the BGA parts are not broken.

When a normal value is comfirmed.

● Panel control (TX-RX unit)

Checking voltage

Points to be checked	Normal voltage
5C IC903 (5 pin)	5.0V
33C IC904 (5 pin)	3.3V

When an abnormal value is comfirmed. → The BGA parts are not broken.

When a normal value is comfirmed.

Checking the clock/reset

Points to be checked	Normal voltage
Xout R948	11.059MHz (5.0V)
/PRST R947 (Signal side)	5.0V
FLASH R986	3.3V

When an abnormal value is comfirmed. → The BGA parts are not broken.

When a normal value is comfirmed.

Checking the Control signal

Points to be checked	Normal voltage
/CS0 IC911 (48 pin)	3.3V→0V→3.3V
/RD IC911 (42 pin)	3.3V→0V→3.3V

When an abnormal value is comfirmed. → The BGA parts are not broken.

When a normal value is comfirmed.

Checking the Control signal

Points to be checked	Normal voltage
/LCDRST R991 (Signal side)	3.3V
/CS3 IC912 (7 pin)	3.3V→0V→3.3V

When an abnormal value is comfirmed. → If nothing is displayed even after replacing the panel, the BGA may be broken.

The panel microcomputer receives a request of LCD display from the ASIC. Then, the LCD displays. The /LCDRST and /CS3 signal become abnormal if communication is disabled due to a trouble in the ASIC.

When a normal value is comfirmed.

It is unlikely that the BGA parts are broken.

● When an error display appears on the LCD.

The LCD displays "INIT ERROR1".	An error occurs when the ASIC internal RAM reads or writes. The ASIC may be broken.
The LCD displays "INIT ERROR2".	An error occurs when the DSP internal RAM reads or writes. The DSP may be broken.
The LCD displays "INIT ERROR3".	An error occurs when the SRAM internal RAM reads or writes. The SRAM may be broken.

ADJUSTMENT

Controls

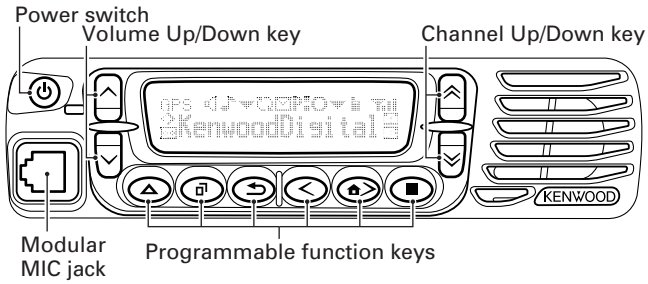

KMC-36

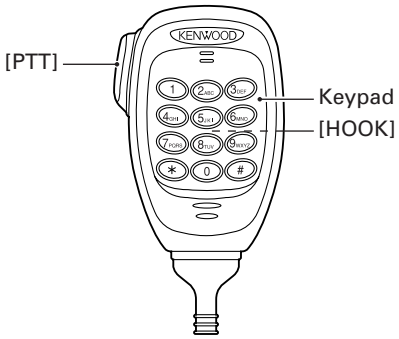

Panel Test Mode

■ Test mode operation features

This transceiver has a test mode. ***To enter test mode, press and hold the [⮌] key while turning the transceiver power ON. Before the transceiver enters test mode, the frequency version information appears on the LCD momentarily.*** Test mode can be inhibited by programming. To exit test mode, turn the transceiver power OFF. The following functions are available in test mode.

■ Key operation

Key	"FNC" not appears on the sub LCD display	
	Function	**Display**
[⌃⌃] / [⌄⌄]	Test CH up/down	Channel No.
[⌃] / [⌄]	Volume up/down	-
[△]	Push: Squelch level up Hold: Squelch off	Squelch level Squelch off: icon appears
[■]	Wide/Narrow/Very narrow	Wide : "w" Narrow : "n" Very narrow : "v"
[⧉]	Shift to panel tuning mode	-
[⮌]	Function on	"FNC" appears on the sub LCD display
[<]	MSK 1200bps and 2400bps	2400bps : icon appears
[⌂>]	Test signaling CH up	Signaling No.

Key	"FNC" not appears	
	Function	**Display**
Microphone key		
[PTT]	Transmit	-
[0] to [9] and [A] to [D], [#], [✱]	Use as the DTMF keypad. If a key is pressed during transmission, the DTMF corresponding to the key that was presses is sent.	-

Key	"FNC" appears on the sub LCD display	
	Function	**Display**
[⌃⌃]	-	-
[⌄⌄]	Analog/NXDN	Analog: "A" NXDN: "N"
[⌃] / [⌄]	Function off	-
[△]	-	-
[■]	LCD all lights	LCD all point appears
[⧉]	High power/Low power	Low: icon appears
[⮌]	Function off	-
[<]	Compander on/off	On: icon appears
[⌂>]	Beat shift on/off	On: icon appears
Microphone key		
[PTT]	Transmit	
[0] to [9] and [A] to [D], [#], [✱]	Function off	-

• LED indicator

Red LED Lights during transmission.
Green LED Lights when there is carrier.

• Sub LCD indicator

"FNC" Appears at function on.

• LCD display in panel test mode

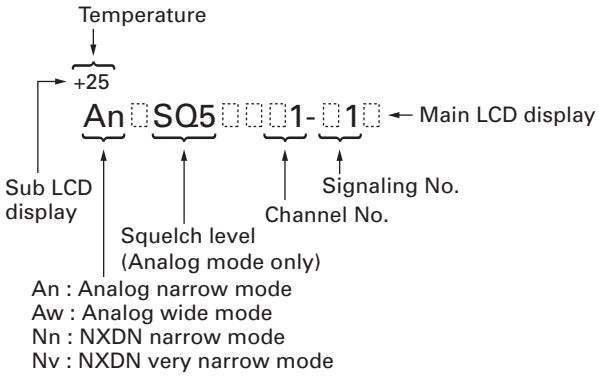

ADJUSTMENT

■ Frequency and Signaling

The transceiver has been adjusted for the frequencies shown in the following table. When required, readjust them following the adjustment procedure to obtain the frequencies you want in actual operation.

• Test frequency

CH	RX (MHz)	TX (MHz)
1	485.05000	485.10000
2	450.05000	450.10000
3	519.95000	519.90000
4	485.00000	485.00000
5	485.20000	485.20000
6	485.40000	485.40000
7~16	-	-

• Analog mode signaling

No.	RX	TX
1	None	None
2	None	100Hz Square Wave
3	LTR Data : AREA=0, GOTO=12 HOME=12 ID=47, FREE=25	LTR Data : AREA=0, GOTO=12 HOME=12 ID=47, FREE=25
4	QT : 67.0Hz	QT : 67.0Hz
5	QT : 151.4Hz	QT : 151.4Hz
6	QT : 210.7Hz	QT : 210.7Hz
7	QT : 254.1Hz	QT : 254.1Hz
8	DQT : D023N	DQT : D023N
9	DQT : D754I	DQT : D754I
10	DTMF : 159D	DTMF : 159D
11	None	DTMF Code 9
12	2-tone : A : 304.7Hz B : 3106.0Hz	2-tone : A : 304.7Hz B : 3106.0Hz
13	Single Tone : 979.9Hz	Single Tone : 979.9Hz
14	None	Single Tone : 1000Hz
15	None	MSK
16	MSK	MSK

• NXDN mode signaling

No.	RX	TX
1	RAN1	RAN1
2	None	PN9
3	RAN1	Maximum deviation pattern

RAN: Radio Access Number
PN9: Pseudo-Random Pattern
(Factory only)

Panel Tuning Mode

■ Preparations for tuning the transceiver

Before attempting to tune the transceiver, connect the unit to a suitable power supply.

Whenever the transmitter is turned, the unit must be connected to a suitable dummy load (i.e. power meter).

The speaker output connector must be terminated with a 4Ω dummy load and connected to an AC voltmeter and an audio distortion meter or a SINAD measurement meter at all times during tuning.

■ Transceiver tuning (To enter tuning mode)

To enter tuning mode, press the [⧉] key while the transceiver is in test mode. Use the [<] key to write tuning data through tuning modes, and the [⩔]/[⩖] key to adjust tuning requirements (1 to 4096 appears on the LCD).

Use the [⌂>] key to select the adjustment item through tuning modes. Use the [⮌] key to adjust 5 reference level adjustments, and use the [■] key to switch between Wide/Narrow/Very narrow.

• LCD display in panel tuning mode

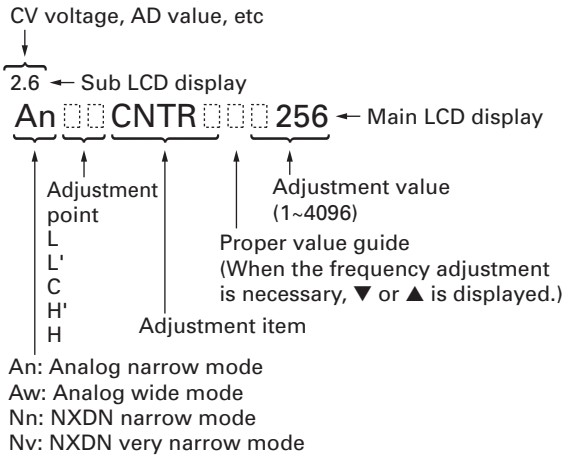

ADJUSTMENT

■ Key operation

Key	Function	
	Push	Hold (1 second)
[⌃⌃] / [⌄⌄]	Adjustment value up/down	Continuation up/down
[⌃] / [⌄]	Volume up/down	Continuation up/down
[△]	Auto adjustment start	-
[■]	Wide/Narrow/Very narrow	-
[⧉]	Shift to panel test mode	-
[↩]	To enter 5 reference level adjustments L/L'/C/H'/H	-
[<]	Writes the adjustment value	-
[⌂>]	Go to next adjustment item	Back to last adjustment item
Microphone key		
[PTT]	Transmit	-
[0] to [9] and [A] to [D], [#], [*]	-	-

■ 5 reference level adjustments frequency

Tuning point	RX (MHz)	TX (MHz)
Low	450.05000	450.10000
Low'	467.55000	467.60000
Center	485.05000	485.10000
High'	502.55000	502.60000
High	519.95000	519.90000

■ Adjustment item and Display

Order	Adjusutment item	Main LCD display	Sub-LCD display	Aw (Analog Wide)	An (Analog Narrow)	Nn (NXDN Narrow)	Nv (NXDN Very Narrow)	Adjust item Number
				Adjustment range				
1	LCD contrast	CNTR	-	1 point ADJ				Common
				1~256				Section 2
2	Receive Assist	RAST	(CV voltage)	5 point ADJ				Common
				1~4096				Section 3
3	Transmit Assist	TAST	(CV voltage)	5 point ADJ				Common
				1~4096				Section 3
4	RTC (Real-time clock)	RTC	-	1 point ADJ				Common
				-62~-1/0/+1~+62				Section 4
5	High Transmit Power Limit	HILMT	-	-	5	-	-	Transmitter
				1~256				Section 1
6	Low Transmit Power Limit	LOLMT	-	-	5	-	-	Transmitter
				1~256				Section 2
7	High Transmit Power	HIPWR	-	-	5	-	-	Transmitter
				1~1024				Section 3
8	Low Transmit Power	LOPWR	-	-	5	-	-	Transmitter
				1~1024				Section 4
9	Balance	BAL	(Encode frequency)	-	5	-	-	Transmitter
				1~256				Section 5
10	Maximum Deviation (NXDN)	NDEV	-	-	-	5	5	Transmitter
				1~1024				Section 6
11	Maximum Deviation (Analog)	ADEV	-	5	5	-	-	Transmitter
				1~1024				Section 7

ADJUSTMENT

Order	Adjusutment item	Main LCD display	Sub-LCD display	Aw (Analog Wide)	An (Analog Narrow)	Nn (NXDN Narrow)	Nv (NXDN Very Narrow)	Adjust item Number
				Adjustment range				
12	QT Deviation	QT	-	1	1	-	-	Transmitter Section 8
				1~1024				
13	DQT Deviation	DQT	-	1	1	-	-	Transmitter Section 9
				1~1024				
14	LTR Deviation	LTR	-	1	1	-	-	Transmitter Section 10
				1~1024				
15	DTMF Deviation	DTMF	-	1	1	-	-	Transmitter Section 11
				1~1024				
16	Single Tone Deviation	TONE	-	1	1	-	-	Transmitter Section 12
				1~1024				
17	MSK Deviation	MSK	-	1	1	-	-	Transmitter Section 13
				1~1024				
18	CWID Deviation	CWID	-	-	-	-	1	Transmitter Section 14
				1~1024				
19	Sensitivity 1	SENS1	(RSSI measurement value)	-	5	-	-	Receive Section 2
				1~256				
20	Sensitivity 2	SENS2	(RSSI measurement value)	-	5	-	-	Receive Section 3
				1~256				
21	RSSI Reference	RRSSI	(RSSI measurement value)	5	5	- *1	5	Receive Section 4
				1~256				
22	Open Squelch	SQL	(ASQDET measurement value)	5	5	- *1	5	Receive Section 5
				1~256				
23	Low RSSI	LRSSI	(RSSI measurement value)	5	5	- *1	5	Receive Section 6
				1~256				
24	High RSSI	HRSSI	(RSSI measurement value)	5	5	- *1	5	Receive Section 7
				1~256				
25	Tight Squelch	SQLT	(ASQDET measurement value)	5	5	-	-	Receive Section 8
				1~256				

*1: Because NXDN Narrow adjusted by adjusting Analog Narrow, it is not necessary to adjust NXDN Narrow.

ADJUSTMENT

■ Panel tuning mode flow chart

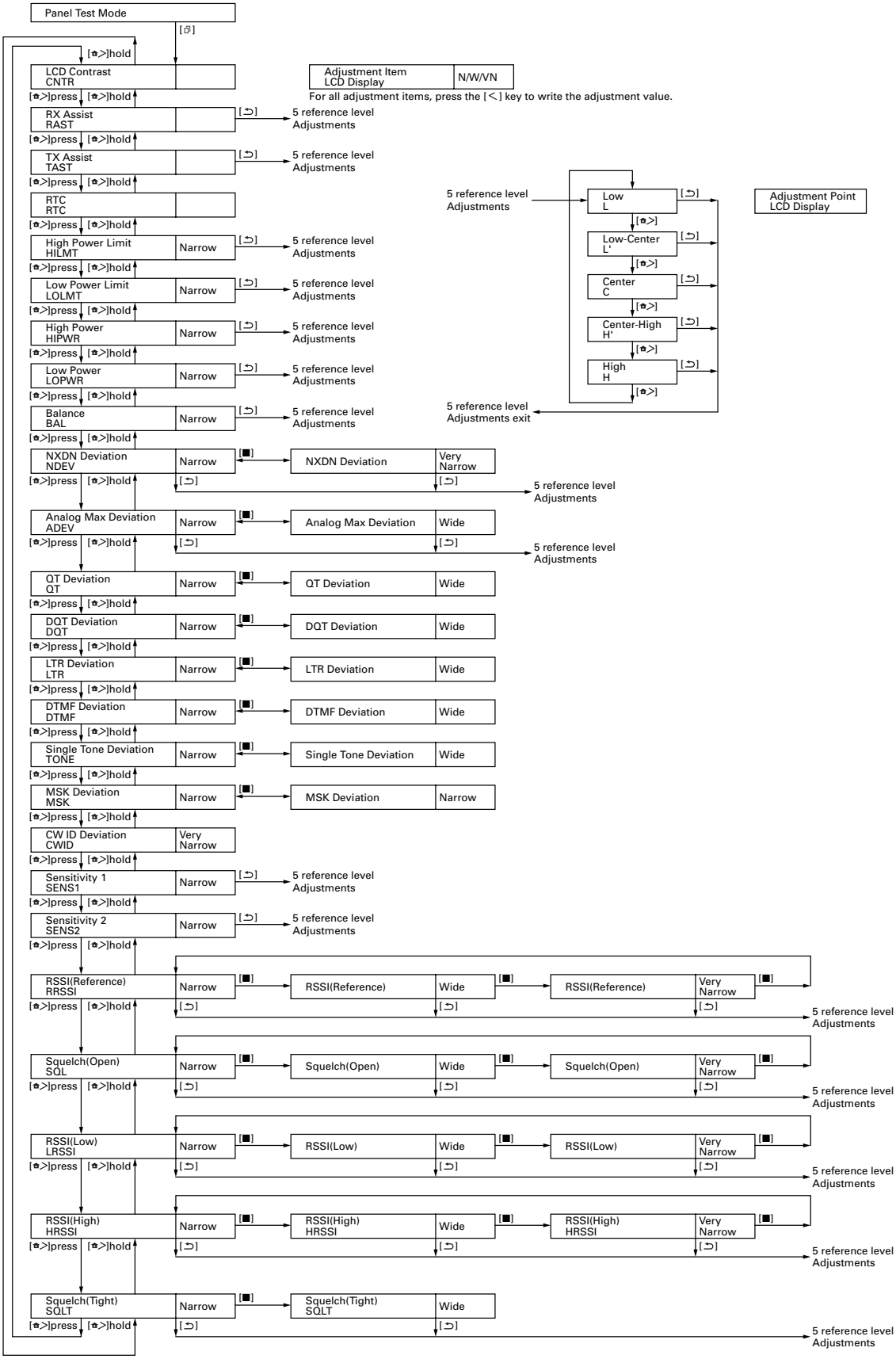

ADJUSTMENT

Test Equipment Required for Alignment

Test Equipment	Major Specifications	
1. Standard Signal Generator (SSG)	Frequency Range	400 to 520MHz
	Modulation	Frequency modulation and external modulation
	Output	-127dBm/0.1μV to greater than -20dBm/22.4mV
	* When performing the Frequency adjustment, the following accuracy is necessary.	
	• 0.001ppm	
	Use a standard oscillator for adjustments, if necessary.	
2. Power Meter	Input Impedance	50Ω
	Operation Frequency	400 to 520MHz
	Measurement Range	Vicinity of 100W
3. Deviation Meter	Frequency Range	400 to 520MHz
4. Digital Volt Meter (DVM)	Measuring Range	10mV to 20V DC
	Input Impedance	High input impedance for minimum circuit loading
5. Oscilloscope		DC through 30MHz
6. High Sensitivity Frequency Counter	Frequency Range	10Hz to 1000MHz
	Frequency Stability	0.01ppm or less
7. Ammeter		20A or more
8. AF Volt Meter (AF VTVM)	Frequency Range	50Hz to 10kHz
	Voltage Range	1mV to 10V
9. Audio Generator (AG)	Frequency Range	50Hz to 5kHz or more
	Output	0 to 1V
10. Distortion Meter	Capability	3% or less at 1kHz
	Input Level	50mV to 10Vrms
11. 4Ω Dummy Load		Approx. 4Ω, 20W
12. Regulated Power Supply		13.6V, approx. 20A (adjustable from 9V to 20V)
		Useful if ammeter equipped

Test cable for microphone input (E30-3360-08)

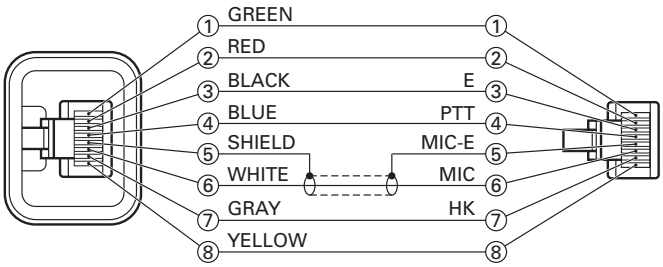

Tuning cable (E30-3383-05)

Adapter cable (E30-3383-05) is required for injecting an audio if PC tuning is used.
See "PC Mode" section fot the connection.

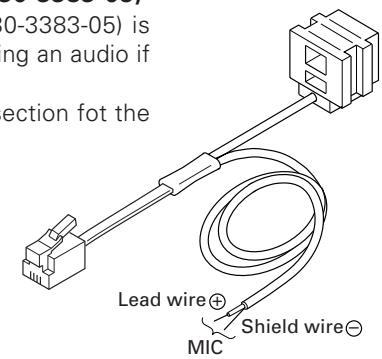

MIC connector (Front panel view)

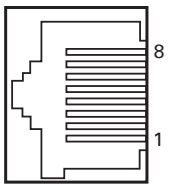

1 : BLC/AFO
2 : +B
3 : GND
4 : PTT/TXD (PC serial data from radio)
5 : MICE
6 : MIC
7 : HOOK/RXD (PC serial data to radio)
8 : DM/KVL

ADJUSTMENT

Radio Check Section

Item	Condition		Measurement			Adjustment			Specifications/ Remarks
	Panel test mode	PC test mode	Test-equipment	Unit	Terminal	Unit	Parts	Method	
1. Frequency check	1) CH-Sig : 1-1 PTT : ON	1) Test Channel Channel : 1 Test Signaling Mode : Analog Signaling : 1 PTT : Press [Transmit] button.	f. counter	Panel	ANT			Check an internal temperature of radio within 25˚C ± 2˚C.	0.3±0.25ppm +24.255Hz~ +266.805Hz @485.1MHz
2. High power check	1) CH-Sig : 1-1 PTT : ON	1) Test Channel Channel : 1 Test Signaling Mode : Analog Signaling : 1 PTT : Press [Transmit] button.	Power meter Ammeter					Check	25W~35W 9.0A or less
	2) CH-Sig : 2-1 PTT : ON	2) Test Channel Channel : 2 Test Signaling Mode : Analog Signaling : 1 PTT : Press [Transmit] button.							
	3) CH-Sig : 3-1 PTT : ON	3) Test Channel Channel : 3 Test Signaling Mode : Analog Signaling : 1 PTT : Press [Transmit] button.							21W~29W 9.0A or less
3. Low power check	1) CH-Sig : 1-1 PTT : ON	1) Test Channel Channel : 1 Test Signaling Mode : Analog Signaling : 1 PTT : Press [Transmit] button.							3.5W~6.5W 5.0A or less
	2) CH-Sig : 2-1 PTT : ON	2) Test Channel Channel : 2 Test Signaling Mode : Analog Signaling : 1 PTT : Press [Transmit] button.							
	3) CH-Sig : 3-1 PTT : ON	3) Test Channel Channel : 3 Test Signaling Mode : Analog Signaling : 1 PTT : Press [Transmit] button.							
4. MIC sensitivity check	1) CH-Sig : 1-1 AG : 1kHz PTT : ON	1) Test Channel Channel : 1 Test Signaling Mode : Analog Signaling : 1 AG : 1kHz PTT : Press [Transmit] button.	Deviation meter Oscilloscope AG AF VTVM					Adjust AG input to get a standard MOD.	Dev: 3kHz at 5mV±1mV

ADJUSTMENT

Item	Condition		Measurement			Adjustment			Specifications/ Remarks
	Panel test mode	PC test mode	Test-equipment	Unit	Terminal	Unit	Parts	Method	
5. Sensitivity check	1) CH-Sig : 1-1 SSG output Wide: –117dBm (0.32µV) (MOD: 1kHz/±3kHz) Narrow: –117dBm (0.32µV) (MOD: 1kHz, Dev: ±1.5kHz)	1) Test Channel Channel : 1 Test Signaling Mode : Analog Signaling : 1 SSG output Wide: –117dBm (0.32µV) (MOD: 1kHz/±3kHz) Narrow: –117dBm (0.32µV) (MOD : 1kHz, Dev: ±1.5kHz)	SSG AF VTVM Oscilloscope Distortion meter		ANT EXT SP connector			Check	12dB SINAD or more

Common Section

Item	Condition		Measurement			Adjustment			Specifications/ Remarks
	Panel tuning mode	PC test mode	Test-equipment	Unit	Terminal	Unit	Parts	Method	
1. Setting	1) DC voltage:13.6V 2) SSG standard modulation [Wide] MOD:1kHz,DEV:3kHz [Narrow] MOD: 1kHz,DEV: 1.5kHz								
2. LCD contrast	1) Adj item:[CNTR] Adjust:[***] Press [<] key to store the adjustment value.	1) Adj item:[LCD Contrast] Press [Apply] button to store the adjustment value.					[Panel tuning mode] [⋀],[⋁]	Adjust the LCD contrast by looking.	After replacing the LCD align contrast.
3. Receive Assist	1) Adj item:[RAST] Adjust:[***] 2) Adj item:[L RAST]→[L' RAST]→[C RAST]→[H' RAST]→[H RAST] Adjust:[***] Press [<] key to store the adjustment value.	1) Adj item:[Receive Assist] 2) Adj item:[Low] [Low'] [Center] [High'] [High] Press [Apply All] button to store the adjustment value.					[PC test mode] [◀],[▶]	The sub LCD display and [V] indicator on the PC window shows VCO lock voltage. Change the adjustment value to get VCO lock voltage within the limit of the specified voltage. Note: Confirm the VCO lock voltage approximately 3 seconds after the adjustment value is changed.	3.0V±0.1V [PC test mode] Press [Apply All] button to store the adjustment value after all adjustment point was adjusted.
Transmit Assist	1) Adj item:[TAST] Adjust:[***] 2) Adj item:[L TAST]→[L' TAST]→[C TAST]→[H' TAST]→[H TAST] Adjust:[***] PTT : ON Press [<] key to store the adjustment value.	1) Adj item:[Transmit Assist] 2) Adj item:[Low] [Low'] [Center] [High'] [High] PTT: Press [Transmit] button. Press [Apply All] button to store the adjustment value.							
4. RTC oscillation frequency adjust	1) Adj item:[RTC] Adjust:[***]	1) Adj item: [RTC(Real-time clock)]					[△]	[Panel tuning mode] Press [△] key. After automatic adjustment adjusted value is displayed on LCD. Press [<] key to store the adjustment value. [PC test mode] Press [Start] button of "Auto Tuning". Press [Apply] button to store the adjustment value after the automatic adjustment was finished.	Adjustment of the transceiver's internal clock.

ADJUSTMENT

Item	Condition		Measurement			Adjustment			Specifications/ Remarks
	Panel tuning mode	PC test mode	Test-equipment	Unit	Terminal	Unit	Parts	Method	
5. Frequency adjust	* The Frequency adjustment can be performed only in PC test mode.	1) Adj item: [Frequency] 2) CH-Sig: 1-1 SSG output : -20dBm (CW (without modulation)) **Caution:** Perform the frequency adjustment under the following conditions. • Temperature range of +23˚C to +27˚C (+73.4˚F to +80.6˚F). (The temperature is displayed on the Frequency adjustment screen of the KPG-111D and the LCD of the transceiver.) • Use an accuracy of 0.001ppm for the SSG. (Use a standard oscillator if necessary.)	SSG		ANT		[▲]	[PC test mode] Press [Start] button of "Auto Tuning". Press [Apply] button to store the adjustment value after the automatic adjustment was finished.	[PC test mode] The value of "IF20" will become around "0" after the adjustment was finished.

Transmitter Section

Item	Condition		Measurement			Adjustment			Specifications/ Remarks
	Panel tuning mode	PC test mode	Test-equipment	Unit	Terminal	Unit	Parts	Method	
1. High Transmit Power Limit adjust	1) Adj item:[HILMT] Adjust:[****] 2) Adj item: [L HILMT]→ [L' HILMT]→ [C HILMT]→ [H' HILMT]→ [H HILMT] Adjust:[****] PTT : ON Press [<] key to store the adjustment value.	1) Adj item: [High Transmit Power Limit] 2) Adj item:[Low] [Low'] [Center] [High'] [High] PTT : Press [Transmit] button. Press [Apply All] button to store the adjustment value.	Power meter Ammeter		ANT		[Panel tuning mode] [⌃],[⌄] [PC test mode] [◀],[▶]	[L HILMT]: 33W [L' HILMT]: 33W [C HILMT]: 33W [H' HILMT]: 28W [H HILMT]: 28W	±3.0W [PC test mode] Press [Apply All] button to store the adjustment value after all adjustment point was adjusted. **CAUTION!** Do not attempt to adjust the transceiver's transmit output power beyond its specifications. If the transceiver is adjusted beyond the specifications, it may cause deterioration of the parts reliability and the output power may be lowered suddenly and unstable. The transceiver may be also extremely hot.

ADJUSTMENT

Item	Condition		Measurement			Adjustment			Specifications/ Remarks
	Panel tuning mode	PC test mode	Test-equipment	Unit	Terminal	Unit	Parts	Method	
2. Low Transmit Power Limit adjust	1) Adj item:[LOLMT] Adjust:[****] 2) Adj item: [L LOLMT]→ [L' LOLMT]→ [C LOLMT]→ [H' LOLMT]→ [H LOLMT] Adjust:[****] PTT : ON Press [<] key to store the adjustment value.	1) Adj item: [Low Transmit Power Limit] 2) Adj item:[Low] [Low'] [Center] [High'] [High] PTT : Press [Transmit] button. Press [Apply All] button to store the adjustment value.	Power meter Ammeter		ANT		[Panel tuning mode] [⌃],[⌄] [PC test mode] [◀],[▶]	15.0W	±1.0W [PC test mode] Press [Apply All] button to store the adjustment value after all adjustment point was adjusted. **CAUTION!** Do not attempt to adjust the transceiver's transmit output power beyond its specifications. If the transceiver is adjusted beyond the specifications, it may cause deterioration of the parts reliability and the output power may be lowered suddenly and unstable. The transceiver may be also extremely hot.
3. High Transmit Power adjust	1) Adj item:[HIPWR] Adjust:[****] 2) Adj item:[L HIPWR]→ [L' HIPWR]→ [C HIPWR]→ [H' HIPWR]→ [H HIPWR] Adjust:[****] PTT : ON Press [<] key to store the adjustment value.	1) Adj item: [High Transmit Power] 2) Adj item:[Low] [Low'] [Center] [High'] [High] PTT : Press [Transmit] button. Press [Apply All] button to store the adjustment value.						[L HIPWR]: 30.0W [L' HIPWR]: 30.0W [C HIPWR]: 30.0W [H' HIPWR]: 25.0W [H HIPWR]: 25.0W	±1.0W 9.0A or less [PC test mode] Press [Apply All] button to store the adjustment value after all adjustment point was adjusted.
4. Low Transmit Power adjust	1) Adj item:[LOPWR] Adjust:[****] 2) Adj item:[L LOPWR]→ [L' LOPWR]→ [C LOPWR]→ [H' LOPWR]→ [H LOPWR] Adjust:[****] PTT : ON Press [<] key to store the adjustment value.	1) Adj item: [Low Transmit Power] 2) Adj item:[Low] [Low'] [Center] [High'] [High] PTT : Press [Transmit] button. Press [Apply All] button to store the adjustment value.						5.0W	±0.5W 5.0A or less [PC test mode] Press [Apply All] button to store the adjustment value after all adjustment point was adjusted.
5. Balance adjust *2	1) Adj item:[BAL] Adjust:[***] Deviation meter LPF : 3kHz HPF : OFF 2) Adj item:[L BAL]→ [L' BAL]→[C BAL]→ [H' BAL]→[H BAL] Adjust:[***] PTT : ON Press [<] key to store the adjustment value. Sub LCD: Tone frequency [⌃] key: Press while transmitting to change 20Hz and 2kHz	1) Adj item:[Balance] Deviation meter LPF : 3kHz HPF : OFF 2) Adj item:[Low] [Low'] [Center] [High'] [High] PTT : Press [Transmit] button. Press [Apply All] button to store the adjustment value. [2kHz Sine Wave Check box]: Check while transmitting change to 2kHz.	Deviation meter Oscilloscope					The Deviation of 20Hz frequency is fixed. Change the 2kHz adjustment value to become the same deviation of 20Hz within the specified range.	2kHz Tone deviation is within ±1.0% of 20Hz tone deviation. [PC test mode] Press [Apply All] button to store the adjustment value after all adjustment point was adjusted.

*2: Refer to the "Mode, Signaling, Necessary adjustment and order" table on page 57.
Balance adjustment is common with the adjustment of all signaling deviation.

ADJUSTMENT

Item	Condition		Measurement			Adjustment			Specifications/ Remarks
	Panel tuning mode	PC test mode	Test-equipment	Unit	Terminal	Unit	Parts	Method	
6. Maximum Deviation (NXDN) adjust *3 [Narrow]	1) Adj item:[Nn NDEV] Adjust:[****] Deviation meter LPF : 3kHz HPF : OFF 2) Adj item: [NnL NDEV]→ [NnL' NDEV]→ [NnC NDEV]→ [NnH' NDEV]→ [NnH NDEV] Adjust:[****] PTT : ON Press [<] key to store the adjustment value.	1) Adj item:[Maximum Deviation(NXDN Narrow)] Deviation meter LPF : 3kHz HPF : OFF 2) Adj item:[Low] [Low'] [Center] [High'] [High] PTT : Press [Transmit] button. Press [Apply All] button to store the adjustment value.	Deviation meter Oscilloscope		ANT		[Panel tuning mode] [⌃],[⌄] [PC test mode] [◀],[▶]	3056Hz	±50Hz [PC test mode] Press [Apply All] button to store the adjustment value after all adjustment point was adjusted.
[Very Narrow]	1) Adj item:[Nv NDEV] Adjust:[****] 2) Adj item: [NvL NDEV]→ [NvL' NDEV]→ [NvC NDEV]→ [NvH' NDEV]→ [NvH NDEV] Adjust:[****] PTT : ON Press [<] key to store the adjustment value.	1) Adj item:[Maximum Deviation(NXDN Very Narrow)] 2) Adj item:[Low] [Low'] [Center] [High'] [High] PTT : Press [Transmit] button. Press [Apply All] button to store the adjustment value.						1337Hz	±50Hz [PC test mode] Press [Apply All] button to store the adjustment value after all adjustment point was adjusted.
7. Maximum Deviation (Analog) adjust *3 [Narrow]	1) Adj item:[An ADEV] Adjust:[****] Deviation meter LPF : 15kHz HPF : OFF 2) Adj item: [AnL ADEV]→ [AnL' ADEV]→ [AnC ADEV]→ [AnH' ADEV]→ [AnH ADEV] Adjust:[****] PTT : ON Press [<] key to store the adjustment value.	1) Adj item:[Maximum Deviation(Analog Narrow)] Deviation meter LPF : 15kHz HPF : OFF 2) Adj item:[Low] [Low'] [Center] [High'] [High] PTT : Press [Transmit] button. Press [Apply All] button to store the adjustment value.						Write the same adjustment value of "NXDN Deviation [Narrow]" for each adjustment point. Transmit at each adjustment point and check that the Analog deviation is between 2050Hz and 2150Hz. Deviation meter LPF: 15kHz HPF: OFF [Panel tuning mode] PTT: ON [PC test mode] PTT: Press [Transmit] button	2050~2150Hz [PC test mode] Press [Apply All] button to store the adjustment value after all adjustment point was adjusted.
[Wide]	1) Adj item:[Aw ADEV] Adjust:[****] 2) Adj item: [AwL ADEV]→ [AwL' ADEV]→ [AwC ADEV]→ [AwH' ADEV]→ [AwH ADEV] Adjust:[****] PTT : ON Press [<] key to store the adjustment value.	1) Adj item:[Maximum Deviation(Analog Wide)] 2) Adj item:[Low] [Low'] [Center] [High'] [High] PTT : Press [Transmit] button. Press [Apply All] button to store the adjustment value.						Write the same adjustment value of "NXDN Deviation [Narrow]" for each adjustment point. Transmit at each adjustment point and check that the Analog deviation is between 4150Hz and 4250Hz. Deviation meter LPF: 15kHz HPF: OFF [Panel tuning mode] PTT: ON [PC test mode] PTT: Press [Transmit] button	4150~4250Hz [PC test mode] Press [Apply All] button to store the adjustment value after all adjustment point was adjusted.

*3: Refer to the "Mode, Signaling, Necessary adjustment and order" table on page 57.
Analog deviation adjustment (Narrow/Wide) is common with the adjustment of all analog signaling.

ADJUSTMENT

Item	Condition		Measurement			Adjustment			Specifications/ Remarks
	Panel tuning mode	PC test mode	Test-equipment	Unit	Terminal	Unit	Parts	Method	
8. QT Deviation adjust *4 [Narrow]	1) Adj item:[An QT] Adjust:[****] Deviation meter LPF : 3kHz HPF : OFF PTT : ON Press [<] key to store the adjustment value.	1) Adj item:[QT Deviation (Narrow)] Deviation meter LPF : 3kHz HPF : OFF PTT : Press [Transmit] button. Press [Apply] button to store the adjustment value.	Deviation meter Oscilloscope		ANT		[Panel tuning mode] [⌃],[⌄] [PC test mode] [◀],[▶]	Write the value as followings. 513 (Reference value)	0.30~0.40kHz
[Wide]	1) Adj item:[Aw QT] Adjust:[****] PTT : ON Press [<] key to store the adjustment value.	1) Adj item:[QT Deviation (Wide)] PTT : Press [Transmit] button. Press [Apply] button to store the adjustment value.							0.70~0.80kHz
9. DQT Deviation adjust *4 [Narrow]	1) Adj item:[An DQT] Adjust:[****] Deviation meter LPF : 3kHz HPF : OFF PTT : ON Press [<] key to store the adjustment value.	1) Adj item:[DQT Deviation (Narrow)] Deviation meter LPF : 3kHz HPF : OFF PTT : Press [Transmit] button. Press [Apply] button to store the adjustment value.						Write the value as followings. 430 (Reference value)	0.30~0.40kHz
[Wide]	1) Adj item:[Aw DQT] Adjust:[****] PTT : ON Press [<] key to store the adjustment value.	1) Adj item:[DQT Deviation (Wide)] PTT : Press [Transmit] button. Press [Apply] button to store the adjustment value.							0.70~0.80kHz
10.LTR Deviation adjust *4 [Narrow]	1) Adj item:[An LTR] Adjust:[****] Deviation meter LPF : 3kHz HPF : OFF PTT : ON Press [<] key to store the adjustment value.	1) Adj item:[LTR Deviation (Narrow)] Deviation meter LPF : 3kHz HPF : OFF PTT : Press [Transmit] button. Press [Apply] button to store the adjustment value.						Write the value as followings. 465 (Reference value)	0.65~0.85kHz
[Wide]	1) Adj item:[Aw LTR] Adjust:[****] PTT : ON Press [<] key to store the adjustment value.	1) Adj item:[LTR Deviation (Wide)] PTT : Press [Transmit] button. Press [Apply] button to store the adjustment value.							0.90~1.10kHz
11.DTMF Deviation adjust *4 [Narrow]	1) Adj item:[An DTMF] Adjust:[****] Deviation meter LPF : 15kHz HPF : OFF PTT : ON Press [<] key to store the adjustment value.	1) Adj item:[DTMF Deviation (Narrow)] Deviation meter LPF : 15kHz HPF : OFF PTT : Press [Transmit] button. Press [Apply] button to store the adjustment value.						Write the value as followings. 650 (Reference value)	1.40~1.60kHz
[Wide]	1) Adj item:[Aw DTMF] Adjust:[****] PTT : ON Press [<] key to store the adjustment value.	1) Adj item:[DTMF Deviation (Wide)] PTT : Press [Transmit] button. Press [Apply] button to store the adjustment value.							2.90~3.10kHz

*4: Refer to the "Mode, Signaling, Necessary adjustment and order" table on page 57.

ADJUSTMENT

Item	Condition		Measurement			Adjustment			Specifications/ Remarks
	Panel tuning mode	PC test mode	Test-equipment	Unit	Terminal	Unit	Parts	Method	
12.Single Tone Deviation (2TONE deviation adjust) adjust *4 [Narrow]	1) Adj item:[An TONE] Adjust:[****] Deviation meter LPF : 15kHz HPF : OFF PTT : ON Press [<] key to store the adjustment value.	1) Adj item:[Single Tone Deviation (Narrow)] Deviation meter LPF : 15kHz HPF : OFF PTT : Press [Transmit] button. Press [Apply] button to store the adjustment value.	Deviation meter Oscilloscope		ANT		[Panel tuning mode] [⋀],[⋁] [PC test mode] [◀],[▶]	Write the value as followings. 513 (Reference value)	1.40~1.60kHz
[Wide]	1) Adj item:[Aw TONE] Adjust:[****] PTT : ON Press [<] key to store the adjustment value.	1) Adj item:[Single Tone Deviation (Wide)] PTT : Press [Transmit] button. Press [Apply] button to store the adjustment value.							2.90~3.10kHz
13.MSK Deviation adjust *4 [Narrow]	1) Adj item:[An MSK] Adjust:[****] Deviation meter LPF : 15kHz HPF : OFF PTT : ON Press [<] key to store the adjustment value.	1) Adj item:[MSK Deviation (Narrow)] Deviation meter LPF : 15kHz HPF : OFF PTT : Press [Transmit] button. Press [Apply] button to store the adjustment value.						Write the value as followings. 513 (Reference value)	1.40~1.60kHz
[Wide]	1) Adj item:[Aw MSK] Adjust:[****] PTT : ON Press [<] key to store the adjustment value.	1) Adj item:[MSK Deviation (Wide)] PTT : Press [Transmit] button. Press [Apply] button to store the adjustment value.							2.90~3.10kHz
14.CWID Deviation adjust *4 [Very Narrow]	1) Adj item:[Nv CWID] Adjust:[****] Deviation meter LPF : 3kHz HPF : OFF PTT : ON Press [<] key to store the adjustment value.	1) Adj item:[CWID Deviation] Deviation meter LPF : 3kHz HPF : OFF PTT : Press [Transmit] button. Press [Apply] button to store the adjustment value.						Write the value as followings. 375 (Reference value)	0.90~1.10kHz

*4: Refer to the "Mode, Signaling, Necessary adjustment and order" table on page 57.

ADJUSTMENT

■ Mode, Signaling, Necessary adjustment and order

Mode	Signaling	Necessary adjustment and order		
		Wide	Narrow	Very Narrow
Analog	Audio	1. Balance adjust 2. Analog Deviation adjust [Wide]	1. Balance adjust 2. Analog Deviation adjust [Narrow]	-
	QT	1. Balance adjust 2. Analog Deviation adjust [Wide] 3. QT Deviation adjust [Wide]	1. Balance adjust 2. Analog Deviation adjust [Narrow] 3. QT Deviation adjust [Narrow]	-
	DQT	1. Balance adjust 2. Analog Deviation adjust [Wide] 3. DQT Deviation adjust [Wide]	1. Balance adjust 2. Analog Deviation adjust [Narrow] 3. DQT Deviation adjust [Narrow]	-
	LTR	1. Balance adjust 2. Analog Deviation adjust [Wide] 3. LTR Deviation adjust [Wide]	1. Balance adjust 2. Analog Deviation adjust [Narrow] 3. LTR Deviation adjust [Narrow]	-
	DTMF	1. Balance adjust 2. Analog Deviation adjust [Wide] 3. DTMF Deviation adjust [Wide]	1. Balance adjust 2. Analog Deviation adjust [Narrow] 3. DTMF Deviation adjust [Narrow]	-
	2TONE	1. Balance adjust 2. Analog Deviation adjust [Wide] 3. TONE Deviation adjust [Wide]	1. Balance adjust 2. Analog Deviation adjust [Narrow] 3. TONE Deviation adjust [Narrow]	-
	MSK (FleetSync)	1. Balance adjust 2. Analog Deviation adjust [Wide] 3. MSK Deviation adjust [Wide]	1. Balance adjust 2. Analog Deviation adjust [Narrow] 3. MSK Deviation adjust [Narrow]	-
NXDN		-	1. Balance adjust 2. NXDN Deviation adjust [Narrow]	1. Balance adjust 2. Analog Deviation adjust [Narrow] 3. CWID Deviation adjust [Very Narrow]

Receiver Section

Item	Condition		Measurement			Adjustment			Specifications/ Remarks
	Panel tuning mode	PC test mode	Test-equipment	Unit	Terminal	Unit	Parts	Method	
1. AF level setting	[Panel test mode] 1) CH-Sig : 1-1 SSG output: -47dBm (1mV) (MOD: 1kHz, Dev: ±1.5kHz)	1) Test Channel Channel : 1 Test Signaling Mode : Analog Signaling : 1 SSG output: -47dBm (1mV) (MOD: 1kHz, Dev: ±1.5kHz)	SSG DVM AF VTVM Dummy load (4Ω)		ANT Ext.SP connector		[∧],[∨]	Volume Up/Down knob to obtain 2.83V AF output. (2.0W @ 4Ω load)	2.83V±0.3V
2. Sensitivity 1 adjust (BPF adjust)	1) Adj item:[SENS1] Adjust:[***] 2) Adj item: [L SENS1]→ [L' SENS1]→ [C SENS1]→ [H' SENS1]→ [H SENS1] Adjust:[***] Press [<] key to store the adjustment value.	1) Adj item:[Sensitivity 1] 2) Adj item:[Low] [Low'] [Center] [High'] [High] Press [Apply All] button to store the adjustment value.					[Panel tuning mode] [≪],[≫] [PC test mode] [◀],[▶]	Write the value as followings [L SENS1] / [Low] : 90 [L' SENS1] / [Low'] : 119 [C SENS1] / [Center] : 150 [H' SENS1] / [High'] : 184 [H SENS1] / [High] : 224	Output voltage adjustment of IC206

ADJUSTMENT

Item	Condition		Measurement			Adjustment			Specifications/ Remarks
	Panel tuning mode	PC test mode	Test-equipment	Unit	Terminal	Unit	Parts	Method	
3. Sensitivity 2 adjust (BPF adjust)	1) Adj item:[SENS2] Adjust:[***] 2) Adj item: [L SENS2]→ [L' SENS2]→ [C SENS2]→ [H' SENS2]→ [H SENS2] Adjust:[***] Press [<] key to store the adjustment value.	1) Adj item:[Sensitivity 2] 2) Adj item:[Low] [Low'] [Center] [High'] [High] Press [Apply All] button to store the adjustment value.			ANT Ext.SP connector		[Panel tuning mode] [⋀],[⋁] [PC test mode] [◀],[▶]	Write the value as followings [L SENS2] / [Low] : 70 [L' SENS2] / [Low'] : 120 [C SENS2] / [Center] : 160 [H' SENS2] / [High'] : 206 [H SENS2] / [High] : 245	Output voltage adjustment of IC205
4. RSSI reference adjust *5 [Analog Narrow]	1) Adj item:[An RRSSI] Adjust:[***] 2) Adj item: [AnL RRSSI]→ [AnL' RRSSI]→ [AnC RRSSI]→ [AnH' RRSSI]→ [AnH RRSSI] SSG output: 12dB SINAD level -3dB (MOD: 1kHz, Dev: ±1.5kHz)	1) Adj item:[RSSI Reference(Narrow)] 2) Adj item:[Low] [Low'] [Center] [High'] [High] SSG output : 12dB SINAD level -3dB (MOD: 1kHz, Dev: ±1.5kHz)	SSG AF VTVM Oscilloscope Distortion meter Dummy load					[Panel test mode] After input signal from SSG, press [<] key to store the adjustment value. [PC test mode] After input signal from SSG, press [Apply] button to store the adjustment value.	
[Analog Wide]	1) Adj item:[Aw RRSSI] Adjust:[***] 2) Adj item: [AwL RRSSI]→ [AwL' RRSSI]→ [AwC RRSSI]→ [AwH' RRSSI]→ [AwH RRSSI] SSG output: 12dB SINAD level -3dB (MOD: 1kHz, Dev: ±3kHz)	1) Adj item:[RSSI Reference(Wide)] 2) Adj item:[Low] [Low'] [Center] [High'] [High] SSG output : 12dB SINAD level -3dB (MOD: 1kHz, Dev: ±3kHz)							
[NXDN Very Narrow]	1) Adj item:[Nv RRSSI] Adjust:[***] 2) Adj item: [NvL RRSSI]→ [NvL' RRSSI]→ [NvC RRSSI]→ [NvH' RRSSI]→ [NvH RRSSI] SSG output: 12dB SINAD level for analog Narrow -3dB (MOD: 1kHz, Dev: ±1.5kHz)	1) Adj item: [RSSI Reference (Very Narrow)] 2) Adj item:[Low] [Low'] [Center] [High'] [High] SSG output : 12dB SINAD level for analog Narrow -3dB (MOD: 1kHz, Dev: ±1.5kHz)							Adjust with the analog signal.

*5: Because "RSSI reference adjust" of NXDN Narrow is adjusted by adjusting "RSSI reference adjust [Analog Narrow]", it is not necessary to adjust "RSSI reference adjust" of NXDN Narrow.

ADJUSTMENT

Item	Condition		Measurement			Adjustment			Specifications/ Remarks
	Panel tuning mode	PC test mode	Test-equipment	Unit	Terminal	Unit	Parts	Method	
5. Open Squelch adjust *6 (Squelch level 5 adjust) [Analog Narrow]	1) Adj item:[An SQL] Adjust:[***] 2) Adj item: [AnL SQL]→ [AnL' SQL]→ [AnC SQL]→ [AnH' SQL]→ [AnH SQL] SSG output: 12dB SINAD level +1dB (MOD: 1kHz, Dev: ±1.5kHz)	1) Adj item:[Open Squelch (Narrow)] 2) Adj item:[Low] [Low'] [Center] [High'] [High] SSG output : 12dB SINAD level +1dB (MOD: 1kHz, Dev: ±1.5kHz)	SSG AF VTVM Oscilloscope Distortion meter Dummy load		ANT Ext.SP connector			[Panel test mode] After input signal from SSG, press [<] key to store the adjustment value. [PC test mode] After input signal from SSG, press [Apply] button to store the adjustment value.	
[Analog Wide]	1) Adj item:[Aw SQL] Adjust:[***] 2) Adj item: [AwL SQL]→ [AwL' SQL]→ [AwC SQL]→ [AwH' SQL]→ [AwH SQL] SSG output: 12dB SINAD level +1dB (MOD: 1kHz, Dev: ±3kHz)	1) Adj item:[Open Squelch (Wide)] 2) Adj item:[Low] [Low'] [Center] [High'] [High] SSG output : 12dB SINAD level +1dB (MOD: 1kHz, Dev: ±3kHz)							
[NXDN Very Narrow]	1) Adj item:[Nv SQL] Adjust:[***] 2) Adj item: [NvL SQL]→ [NvL' SQL]→ [NvC SQL]→ [NvH' SQL]→ [NvH SQL] SSG output: 12dB SINAD level for analog Narrow -2dB (MOD: non)	1) Adj item: [Open Squelch (Very Narrow)] 2) Adj item:[Low] [Low'] [Center] [High'] [High] SSG output : 12dB SINAD level for analog Narrow -2dB (MOD: non)							Adjust with the analog signal.

*6: Because "Squelch (Open) adjust" of NXDN Narrow is adjusted by adjusting "Squelch (Open) adjust [Analog Narrow]", it is not necessary to adjust "Squelch (Open) adjust" of NXDN Narrow.

ADJUSTMENT

Item	Condition		Measurement			Adjustment			Specifications/ Remarks
	Panel tuning mode	PC test mode	Test-equipment	Unit	Terminal	Unit	Parts	Method	
6. Low RSSI at -118dBm adjust *7 [Analog Narrow]	1) Adj item:[An LRSSI] Adjust:[***] 2) Adj item: [AnL LRSSI]→ [AnL' LRSSI]→ [AnC LRSSI]→ [AnH' LRSSI]→ [AnH LRSSI] SSG output : -118dBm (0.28μV) (MOD: 1kHz, Dev: ±1.5kHz)	1) Adj item:[Low RSSI (Narrow)] 2) Adj item:[Low] [Low'] [Center] [High'] [High] SSG output : -118dBm (0.28μV) (MOD: 1kHz, Dev: ±1.5kHz)	SSG		ANT Ext.SP connector			[Panel test mode] After input signal from SSG, press [<] key to store the adjustment value. [PC test mode] After input signal from SSG, press [Apply] button to store the adjustment value.	
[Analog Wide]	1) Adj item:[Aw R LRSSI] Adjust:[***] 2) Adj item: [AwL LRSSI]→ [AwL' LRSSI]→ [AwC LRSSI]→ [AwH' LRSSI]→ [AwH LRSSI] SSG output : -118dBm (0.28μV) (MOD: 1kHz, Dev: ±3kHz)	1) Adj item:[Low RSSI (Wide)] 2) Adj item:[Low] [Low'] [Center] [High'] [High] SSG output : -118dBm (0.28μV) (MOD: 1kHz, Dev: ±3kHz)							
[NXDN Very Narrow]	1) Adj item:[Nv LRSSI] Adjust:[***] 2) Adj item: [NvL LRSSI]→ [NvL' LRSSI]→ [NvC LRSSI]→ [NvH' LRSSI]→ [NvH LRSSI] SSG output : -118dBm (0.28μV) (MOD: 1kHz, Dev: ±1.5kHz)	1) Adj item:[Low RSSI (Very Narrow)] 2) Adj item:[Low] [Low'] [Center] [High'] [High] SSG output : -118dBm (0.28μV) (MOD: 1kHz, Dev: ±1.5kHz)							Adjust with the analog signal.

*7: Because "RSSI at -118dBm adjust" of NXDN Narrow is adjusted by adjusting "RSSI at -118dBm adjust [Analog Narrow]", it is not necessary to adjust "RSSI at -118dBm adjust" of NXDN Narrow.

ADJUSTMENT

Item	Condition		Measurement			Adjustment			Specifications/ Remarks
	Panel tuning mode	PC test mode	Test-equipment	Unit	Terminal	Unit	Parts	Method	
7. High RSSI at -80dBm adjust *8 [Analog Narrow]	1) Adj item:[An HRSSI] Adjust:[***] 2) Adj item: [AnL HRSSI]→ [AnL' HRSSI]→ [AnC HRSSI]→ [AnH' HRSSI]→ [AnH HRSSI] SSG output : -80dBm (22.4μV) (MOD: 1kHz, Dev: ±1.5kHz)	1) Adj item:[High RSSI (Narrow)] 2) Adj item:[Low] [Low'] [Center] [High'] [High] SSG output : -80dBm (22.4μV) (MOD: 1kHz, Dev: ±1.5kHz)	SSG		ANT Ext.SP connector			[Panel test mode] After input signal from SSG, press [<] key to store the adjustment value. [PC test mode] After input signal from SSG, press [Apply] button to store the adjustment value.	
[Analog Wide]	1) Adj item:[Aw R HRSSI] Adjust:[***] 2) Adj item: [AwL HRSSI]→ [AwL' HRSSI]→ [AwC HRSSI]→ [AwH' HRSSI]→ [AwH HRSSI] SSG output : -80dBm (22.4μV) (MOD: 1kHz, Dev: ±3kHz)	1) Adj item:[High RSSI (Wide)] 2) Adj item:[Low] [Low'] [Center] [High'] [High] SSG output : -80dBm (22.4μV) (MOD: 1kHz, Dev: ±3kHz)							
[NXDN Very Narrow]	1) Adj item:[Nv HRSSI] Adjust:[***] 2) Adj item: [NvL HRSSI]→ [NvL' HRSSI]→ [NvC HRSSI]→ [NvH' HRSSI]→ [NvH HRSSI] SSG output : -80dBm (22.4μV) (MOD: 1kHz, Dev: ±1.5kHz)	1) Adj item:[High RSSI (Very Narrow)] 2) Adj item:[Low] [Low'] [Center] [High'] [High] SSG output : -80dBm (22.4μV) (MOD: 1kHz, Dev: ±1.5kHz)							Adjust with the analog signal.
8. Tight Squelch adjust (Squelch level 9 adjust) [Analog Narrow]	1) Adj item:[An SQLT] Adjust:[***] 2) Adj item: [AnL SQLT]→ [AnL' SQLT]→ [AnC SQLT]→ [AnH' SQLT]→ [AnH SQLT] SSG output: 12dB SINAD level +6dB (MOD: 1kHz, Dev: ±1.5kHz)	1) Adj item:[Tight Squelch (Narrow)] 2) Adj item:[Low] [Low'] [Center] [High'] [High] SSG output : 12dB SINAD level +6dB (MOD: 1kHz, Dev: ±1.5kHz)	SSG AF VTVM Oscilloscope Distortion meter Dummy load						
[Analog Wide]	1) Adj item:[Aw SQLT] Adjust:[***] 2) Adj item: [AwL SQLT]→ [AwL' SQLT]→ [AwC SQLT]→ [AwH' SQLT]→ [AwH SQLT] SSG output: 12dB SINAD level +6dB (MOD: 1kHz, Dev: ±3kHz)	1) Adj item:[Tight Squelch (Wide)] 2) Adj item:[Low] [Low'] [Center] [High'] [High] SSG output : 12dB SINAD level +6dB (MOD: 1kHz, Dev: ±3kHz)							

*8: Because "RSSI at -80dBm adjust" of NXDN Narrow is adjusted by adjusting "RSSI at -80dBm adjust [Analog Narrow]", it is not necessary to adjust "RSSI at -80dBm adjust" of NXDN Narrow.

TERMINAL FUNCTION

Display unit (X54-3640-10)

Pin No.	Name	Function
CN901 (to TX-RX unit A/2 CN597)		
1~6	SPO	Speaker input.
7	GND	Ground.
8	80C	8V input.
9,10	SB	Power input of switched power supply.
11	NC	Non-connection.
12	/PSW	Detection signal output of power switch.
13,14	GND	Ground.
15	MIC	MIC signal output.
16	ME	MIC ground.
17	GND	Ground.
18	AFO	RX filtered AF signal input.
19	/PRST	Display CPU reset signal input.
20~23	GND	Ground.
24	SHIFT	Control signal input of Beat-shift function.
25	NC	Non-connection.
26	5C	5V output.
27	TXD	Serial data signal input.
28	RXD	Serial data signal output.
29,30	GND	Ground.
CN902 (to internal speaker)		
1	GND	Ground.
2	SPO	Speaker output.
CN905 (to LCD ASSY)		
1	V5	LCD Drive voltage output.
2	V4	LCD Drive voltage output.
3	V3	LCD Drive voltage output.
4	V2	LCD Drive voltage output.
5	V1	LCD Drive voltage output.
6	Vdd	LCD Driver DC power supply.
7	Vss	LCD Driver Ground.
8	Vdd	LCD Driver DC power supply.
9	D7	LCD Driver data output.
10	D6	LCD Driver data output.
11	D5	LCD Driver data output.
12	D4	LCD Driver data output.
13	D3	LCD Driver data output.
14	D2	LCD Driver data output.
15	D1	LCD Driver data output.
16	D0	LCD Driver data output.
17	/WR	LCD Driver WR signal output.
18	A0	LCD Driver address output.
19	/RES	LCD Driver Reset signal output.
20	/CS	LCD Driver Chip-select signal output.

Pin No.	Name	Function
J901 (MIC jack)		
1	DM	MIC data detection.
2	HOOK/RXD	HOOK:Hook detection, RXD:Serial data input.
3	MIC	MIC signal input.
4	ME	MIC ground.
5	PTT/TXD	PTT:PTT input, TXD:Serial data output.
6	E	Ground.
7	SB	Power output of switched power supply. DC13.6V±15%, 200mA typ.
8	BLC	MIC key backlight control.

TX-RX unit (X57-7390-10) (A/2)

Pin No.	Name	Description
CN595 (to Option board)		
1	OPT1	Refer to "CN595 26-pin connector specification".
2	OPT3	
3	26P_RD	
4	26P_TD	
5	NC	
6	OPT4	
7	OPT10	
8	OPT5	
9	DGND	
10	AGND	
11	AI	
12	AO	
13	AGND	
14	5V	
15	OPT9	
16	DTI	
17	OPT8	
18	OPT11	
19	OPT7	
20	OPT2	
21	TXO	
22	RXEO	
23	RXEI	
24	TXI	
25	OPT6	
26	POW	
CN597 (to Display Unit CN901)		
1,2	GND	Ground
3	RXD	Serial data signal input
4	TXD	Serial data signal output
5	NC	Non-connection
6	50C	5V output.

TERMINAL FUNCTION

Pin No.	Name	Description
7	SHIFT	Control signal output of Beat-shift function
8~11	GND	Ground
12	/PRST	Display CPU reset signal output
13	AFO	RX filtered AF signal output
14	GND	Ground
15	ME	MIC ground
16	MIC	MIC signal input
17,18	GND	Ground
19	/PSW	Detection signal input of power switch
20	NC	Non-connection
21,22	SB	Power output of switched power supply
23	80C	8V output
24	GND	Ground
25~30	SPO	Speaker output
CN600 (to TX-RX unit B/2 CN901)		
1	NC	Non-connection.
2~7	SB	Power output of switched power supply.
8	AFO	RX filtered AF signal output.
9	DI	Data signal input.
10	50C	5V output.
11	GND	Ground.
12	DEO	RX Detected signal output.
13	MI2	External MIC signal input.
14	ME	MIC ground.
15	GND	Ground.
16	RXD0	Serial data input 0.
17	AUXO2	AUX output 2.
18	TXD0	Serial data output 0.
19	AUXO1	AUX output 1.
20	AUXIO9	AUX input/output 9.
21	AUXIO5	AUX input/output 5.
22	AUXIO8	AUX input/output 8.
23	AUXIO4	AUX input/output 4.
24	TXD2	Serial data output 2.
25	AUXIO3	AUX input/output 3.
26	RXD2	Serial data input 2.
27	AUXIO2	AUX input/output 2.
28	AUXIO1	AUX input/output 1.
29	AUXIO7	AUX input/output 7.
30	AUXIO6	AUX input/output 6.

Pin No.	Name	Description
CN705		
1	SB	Power output of switched power supply.
2	SPI	Speaker output.
3	SPO	Speaker input.
4	PA	Control signal output of PA function.
5	HOR	Control signal output of Horn alert function.
6	GND	Ground.
CN403		
1	IGN	Ignition sense input.
2	GND	Ground.

TX-RX unit (X57-7390-10) (B/2)

Pin No.	Name	Description
CN901 (to TX-RX unit A/2 CN600)		
1	AUXIO6	AUX input/output 6.
2	AUXIO7	AUX input/output 7.
3	AUXIO1	AUX input/output 1.
4	AUXIO2	AUX input/output 2.
5	RXD2	Serial data output 2.
6	AUXIO3	AUX input/output 3.
7	TXD2	Serial data input 2.
8	AUXIO4	AUX input/output 4.
9	AUXIO8	AUX input/output 8.
10	AUXIO5	AUX input/output 5.
11	AUXIO9	AUX input/output 9.
12	AUXO1	AUX input 1.
13	TXD0	Serial data input 0.
14	AUXO2	AUX input 2.
15	RXD0	Serial data output 0.
16	GND	Ground.
17	ME	MIC ground.
18	MI2	External MIC signal output.
19	DEO	RX Detected signal input.
20	GND	Ground.
21	50C	5V input.
22	DI	Data signal output.
23	AFO	RX filtered AF signal input.
24	SB	Power input of switched power supply.
25	SB	Power input of switched power supply.
26	SB	Power input of switched power supply.
27	SB	Power input of switched power supply.
28	SB	Power input of switched power supply.
29	SB	Power input of switched power supply.
30	NC	Non-connection.

TERMINAL FUNCTION

Pin No.	Name	Description
J901 (ACC. D-Sub 25pin)		
1	NC	Refer to "D-sub 25-pin connector specification".
2	RXD1	
3	TXD1	
4	AUXIO9	
5	DI	
6	MI2	
7	GND	
8	AUXIO8	
9	TXD2	
10	RXD2	
11	GND	
12	AUXIO7	
13	AUXIO6	
14	SB	
15	AUXO2	
16	AUXO1	
17	AFO	
18	GND	
19	DEO	
20	AUXIO5	
21	AUXIO4	
22	AUXIO3	
23	AUXIO2	
24	AUXIO1	
25	ME	

Solder Land

Name	Description
to GPS receiver	
DGND	Ground
RXD2	Data input
5V_2	5V power supply

TERMINAL FUNCTION

CN595 26-pin connector specification

Pin No.	Pin Name	I/O	Signal Type	Rating and Condition				
				Parameter	Min	Typ	Max	Unit
1	OPT1	I/O	Digital/CMOS Out/CMOS Inwith Interrupt	VIH	2.7	-	3.5	V
				VIL	-0.3	-	0.7	V
				VOH(Io=-2mA)	2.8	-	3.4	V
				VOL(Io=2mA)	-	-	0.7	V
2	OPT3	I/O	Digital/CMOS Out/CMOS Inwith Interrupt	VIH	2.7	-	3.5	V
				VIL	-0.3	-	0.7	V
				VOH(Io=-2mA)	2.8	-	3.4	V
				VOL(Io=2mA)	-	-	0.7	V
3	26P_RD	I	Digital/CMOS Inwith Interrupt	VIH	2.7	-	3.5	V
				VIL	-0.3	-	0.7	V
				Baud Rate		19200		bps
4	26P_TD	O	Digital/CMOS Out	VOH(Io=-2mA)	2.8	-	3.4	V
				VOL(Io=2mA)	-	-	0.7	V
				Baud Rate		19200		bps
5	NC	-	-					
6	OPT4	I/O	Digital/CMOS Out/CMOS In	VIH	2.7	-	3.5	V
				VIL	-0.3	-	0.7	V
				VOH(Io=-2mA)	2.8	-	3.4	V
				VOL(Io=2mA)	-	-	0.7	V
7	OPT10 (USEL)	O	Digital/Analog	Output Amplitude	-	0.28	-	Vp-p
				Coupling Capacitor		0.1		uF
				allowable Load	100	-	-	kΩ
				Pull_Down Registor	-	470	-	kΩ
8	OPT5	I/O	Digital/CMOS Out/CMOS In	VIH	2.7	-	3.5	V
				VIL	-0.3	-	0.7	V
				VOH(Io=-2mA)	2.8	-	3.4	V
				VOL(Io=2mA)	-	-	0.7	V
9	DGND	-	-					
10	AGND	-	-					
11	AI	-	Analog	Input Amplitude	-	0.5	-	Vp-p
				Coupling Capacitor	-	0.1	-	uF
				Input Impedance	22	-	-	kΩ
12	AO	O	Analog	Output Amplitude	-	50.0	-	mVp-p
				Coupling Capacitor	-	0.1	-	uF
				allowable Load	220	-	-	kΩ
13	AGND	-	-					
14	5V	-	Power	Output Voltage				
				(Iout=200mA)	4.7	5.0	5.1	V
				Output Current	-	-	100	mA
15	OPT9 (STON)	I	Analog	Input Level	-	3.3	-	Vp-p
				Coupling Capacitor	-	0.01	-	uF
				Input Impedance	22	-	-	kΩ

TERMINAL FUNCTION

Pin No.	Pin Name	I/O	Signal Type	Rating and Condition				
				Parameter	Min	Typ	Max	Unit
16	DTI	I	Analog	Input Level	-	0.6	-	Vp-p
				Coupling Capacitor	-	0.1	-	uF
				Input Impedance	22	-	-	kΩ
17	OPT8	I/O	Digital/CMOS Out/CMOS Inwith Interrupt	VIH	2.7	-	3.5	V
				VIL	-0.3	-	0.7	V
				VOH(Io=-2mA)	2.8	-	3.4	V
				VOL(Io=2mA)	-	-	0.7	V
18	OPT11	I/O	Digital/CMOS Out/CMOS In	VIH	2.7	-	3.5	V
				VIL	-0.3	-	0.7	V
				VOH(Io=-2mA)	2.8	-	3.4	V
				VOL(Io=2mA)	-	-	0.7	V
19	OPT7	I/O	Digital/CMOS Out/CMOS Inwith Interrupt	VIH	2.7	-	3.5	V
				VIL	-0.3	-	0.7	V
				VOH(Io=-2mA)	2.8	-	3.4	V
				VOL(Io=2mA)	-	-	0.7	V
20	OPT2	I/O	Digital/CMOS Out/CMOS Inwith Interrupt	VIH	2.7	-	3.5	V
				VIL	-0.3	-	0.7	V
				VOH(Io=-2mA)	2.8	-	3.4	V
				VOL(Io=2mA)	-	-	0.7	V
21	TXO	O	Analog	Output Level	-	130	-	mVp-p
				Coupling Capacitor	-	0.1	-	uF
				allowable Load	100	-	-	kΩ
22	RXEO	O	Analog	Output Level	-	640	-	mVp-p
				Coupling Capacitor	-	0.1	-	uF
				allowable Load	100	-	-	kΩ
23	RXEI	I	Analog	Input Level	-	640	-	mVp-p
				Coupling Capacitor		0.1		uF
				Input Impedance	22	-	-	kΩ
24	TXI	I	Analog	Input Level	-	130	-	mVp-p
				Coupling Capacitor		0.1		uF
				Input Impedance	22	-	-	kΩ
25	OPT6	I/O	Digital/CMOS Out/CMOS In	VIH	2.7	-	3.5	V
				VIL	-0.3	-	0.7	V
				VOH(Io=-2mA)	2.8	-	3.4	V
				VOL(Io=2mA)	-	-	0.7	V
26	POW	-	Power	Output Voltage				
				(Iout=100mA)	7.6	8.0	8.4	V
				Output Current	-	-	100	mA

TERMINAL FUNCTION

CN595 26-pin connector specification

Pin No.	Pin Name	Device	I/O	Connection	Description/Function
1	OPT1	ANI board	O	Aux Input	[COR] Conv/LTR L: Not activity receiving H: Activity receiving [TOR] Conv/LTR L: Not activity receiving H: Activity receiving [LOK] Conv L: TX Complete
		VGS-1	I	BUSY	BUSY indication
2	OPT3	ANI board	I	KEY	TX requirement input
		VGS-1	I	PLAY	PLAY indication
3	26P_RD	ANI board	-	-	-
		VGS-1	I	SO	Serial data input
4	26P_TD	ANI board	-	-	-
		VGS-1	O	SI	Serial data output
5	NC	-	-	-	-
6	OPT4	ANI board	O	PTT	PTT signal output
		VGS-1	O	EN	Enable signal output
7	OPT10 (USEL)	ANI board	-	-	-
		VGS-1	O	USEL	UART speed select signal output
8	OPT5	ANI board	O	Emergency	Emergency signal output
		VGS-1	O	RST	Reset signal output
9	DGND	ANI board	-	A-	GND
		VGS-1	-	DGND	DGND
10	AGND	ANI board	-	A-	GND
		VGS-1	-	AGND	AGND
11	AI	ANI board	-	-	-
		VGS-1	I	AO	VGS Audio signal input
12	AO	ANI board	-	-	-
		VGS-1	O	AI	VGS Audio signal output
13	AGND	ANI board	-	A-	GND
		VGS-1	-	AGND	AGND
14	5V	ANI board	-	-	Note: POW and 5V can not be used simultaneously.
		VGS-1	O	5C	5V power supply
15	OPT9 (STON)	ANI board	I	Sidetone	Side tone signal input
		VGS-1	-	-	-
16	DTI	ANI board	I	Data out	Data signal input
		VGS-1	-	-	-
17	OPT8	ANI board	I	Tone Control	Speaker mute signal input
		VGS-1	-	-	-

TERMINAL FUNCTION

Pin No.	Pin Name	Device	I/O	Connection	Description/Function
18	OPT11	ANI board	O	Man-Down	Man-Down signal output
		VGS-1	-	-	-
19	OPT7	ANI board	I	MIC Mute	MIC mute signal input
		VGS-1	-	-	-
20	OPT2	ANI board	I	Aux Output	Emergency signal input
		VGS-1	-	-	-
21	TXO	ANI board	-	-	-
		VGS-1	-	-	-
22	RXEO	ANI board	-	-	-
		VGS-1	-	-	-
23	RXEI	ANI board	-	-	-
		VGS-1	-	-	-
24	TXI	ANI board	-	-	-
		VGS-1	-	-	-
25	OPT6	ANI board	-	-	-
		VGS-1	-	-	-
26	POW	ANI board	O	A+	8V power supply
		VGS-1	-	-	Note: POW and 5V can not be used simultaneously.

TERMINAL FUNCTION

D-sub 25-pin connector specification

Pin No.	Pin Name	I/O	A/D	Rating and Condition				
				Parameter	Min	Typ	Max	Unit
1	NC	-	-	-				
2	RXD1	I	Digital	Input Voltage Range	-30		30	V
				Threshold Low	0.5	1.3		V
				Threshold High		1.75	2.6	V
				Baud Rate		115200		bps
				CL		100		pF
3	TXD1	O	Digital	Voltage Swing (3kΩ Load)	±5	±9		V
				Baud Rate		115200		bps
				CL		100		pF
4	AUXIO9	I/O	Digital	VIH	4	-	5.2	V
				VIL	-0.5	-	1	V
				VOH (Io=-1.5mA)	4	-	5.2	V
				VOL (Io=1.5mA)	-	-	1.1	V
5	DI	I	Analog	Input Voltage range (STD Deviation)	-	0.5	-	Vp-p
				Freq Response (STD Dev.) 20-9600Hz	-3		3	dB
6	MI2	I	Analog	Audio Level (STD Deviation)	-	5	-	mVrms
				Allowable Freq	300		3000	Hz
				Input Impedance	-	600	-	Ω
7	GND	-	GND					
8	AUXIO8	I/O	Digital	VIH	4	-	5.2	V
				VIL	-0.5	-	1	V
				VOH (Io=-1.5mA)	4	-	5.2	V
				VOL (Io=1.5mA)	-	-	1.1	V
9	TXD2	O	Digital	VOH (Io=-1.5mA)	3.7	-	5.2	V
				VOL (Io=1.5mA)	-	-	1.1	V
				CL		100		pF
10	RXD2	I	Digital	VIH	2.8	-	5.2	V
				VIL	-	-	0.65	V
				CL		100		pF
11	GND	-	GND					
12	AUXIO7/ BER_DATA	I/O	Digital	VIH	4	-	5.2	V
				VIL	-0.5	-	1	V
				VOH (Io=-1.5mA)	3.7	-	5.2	V
				VOL (Io=1.5mA)	-	-	1.1	V
13	AUXIO6/ BER_CLK	I/O	Digital	VIH	4	-	5.2	V
				VIL	-0.5	-	1	V
				VOH (Io=-1.5mA)	3.7	-	5.2	V
				VOL (Io=1.5mA)	-	-	1.1	V
14	SB	-	Power	Voltage	This parameter depends on Battery Voltage			
				Supply Current	-	-	2	A
15	AUXO2	O	Digital	The type of this port is open collector.				
				VOL			0.4	V
				IOL			-500	mA

TERMINAL FUNCTION

Pin No.	Pin Name	I/O	A/D	Rating and Condition				
				Parameter	Min	Typ	Max	Unit
16	AUXO1	O	Digital	The type of this port is open collector.				
				VOL			0.4	V
				IOL			-500	mA
17	AFO	O	Analog	Output Level		0.7		Vp-p
				Coupling Capacitor		0.1		uF
				allowable Load	100	-	-	kΩ
				allowable freq	300		3000	Hz
18	GND	-	GND					
19	DEO	O	Analog	Output Level	-	0.28	-	Vp-p
				Coupling Capacitor	-	4.7	-	uF
				allowable Load	47	-	-	kΩ
				Freq. Response (STD Dev)				
				Wide 20-4800Hz	-6		1	dB
				4800-7200Hz	-24		1	dB
				Narrow 20-4800Hz	-15		1	dB
20	AUXIO5	I/O	Digital	VIH	4	-	5.2	V
				VIL	-0.5	-	1	V
				VOH (Io=-1.5mA)	4	-	5.2	V
				VOL (Io=1.5mA)	-	-	1.1	V
21	AUXIO4	I/O	Digital	VIH	4	-	5.2	V
				VIL	-0.5	-	1	V
				VOH (Io=-1.5mA)	4	-	5.2	V
				VOL (Io=1.5mA)	-	-	1.1	V
22	AUXIO3	I/O	Digital	VIH	4	-	5.2	V
				VIL	-0.5	-	1	V
				VOH (Io=-1.5mA)	4	-	5.2	V
				VOL (Io=1.5mA)	-	-	1.1	V
23	AUXIO2	I/O	Digital	VIH	4	-	5.2	V
				VIL	-0.5	-	1	V
				VOH (Io=-1.5mA)	4	-	5.2	V
				VOL (Io=1.5mA)	-	-	1.1	V
24	AUXIO1	I/O	Digital	VIH	4	-	5.2	V
				VIL	-0.5	-	1	V
				VOH (Io=-1.5mA)	4	-	5.2	V
				VOL (Io=1.5mA)	-	-	1.1	V
25	ME	-	Analog	This is GND port for Microphone.				

TX-RX UNIT (X57-7390-10) (B/2) Component side view (J79-0130-19 B/2)

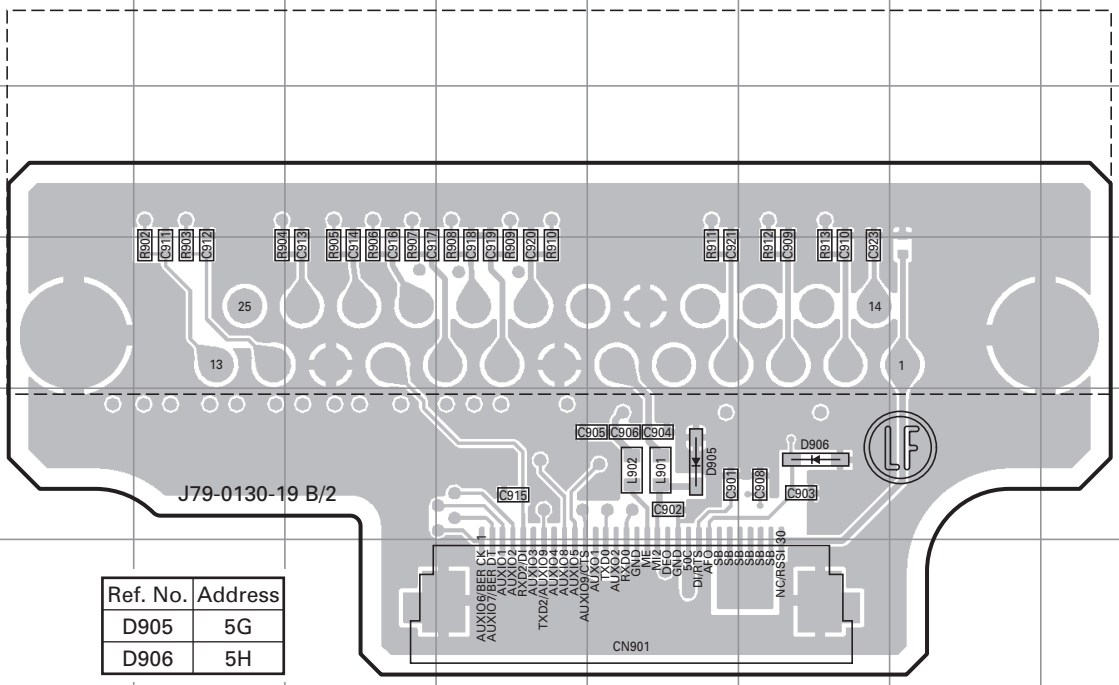

Component side
Layer 1
Layer 2
Layer 3
Layer 4
Layer 5
Layer 6
Foil side

Ref. No.	Address
D905	5G
D906	5H

TX-RX UNIT (X57-7390-10) (B/2) Foil side view (J79-0130-19 B/2)

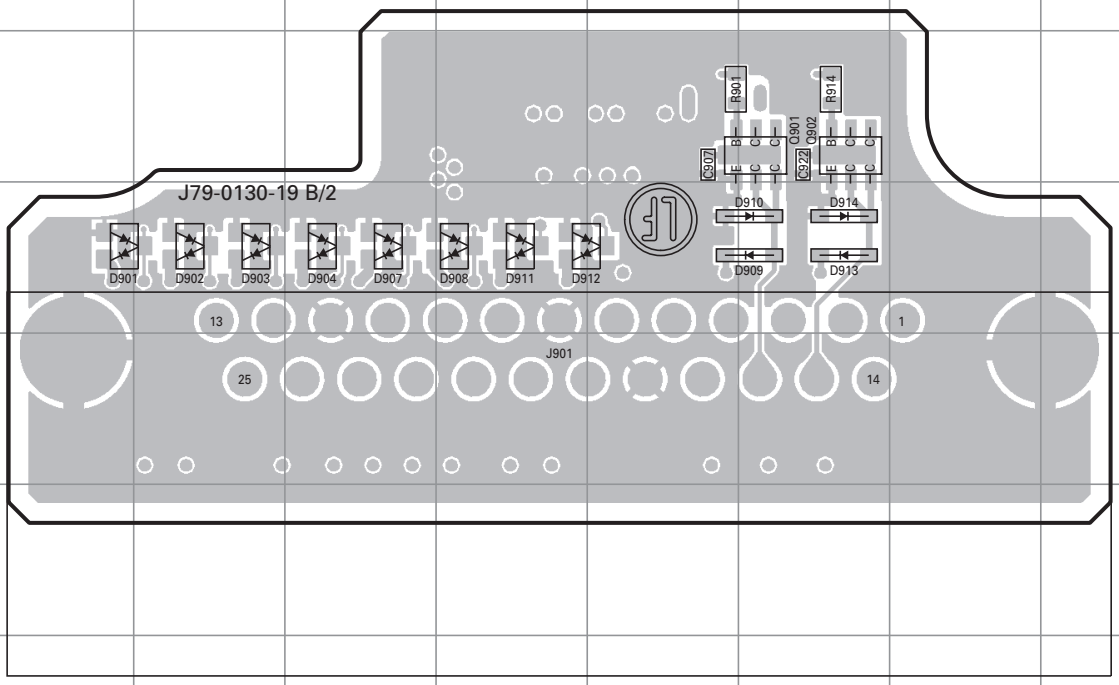

Component side
Layer 1
Layer 2
Layer 3
Layer 4
Layer 5
Layer 6
Foil side

Ref. No.	Address	Ref. No.	Address	Ref. No.	Address
Q901	8H	D904	9E	D911	9F
Q902	8H	D907	9E	D912	9F
D901	9C	D908	9F	D913	9H
D902	9D	D909	9H	D914	9H
D903	9D	D910	9H		

NX-800 PC BOARD

TX-RX UNIT (X57-7390-10) (A/2)
Component side view (J79-0130-19 A/2)

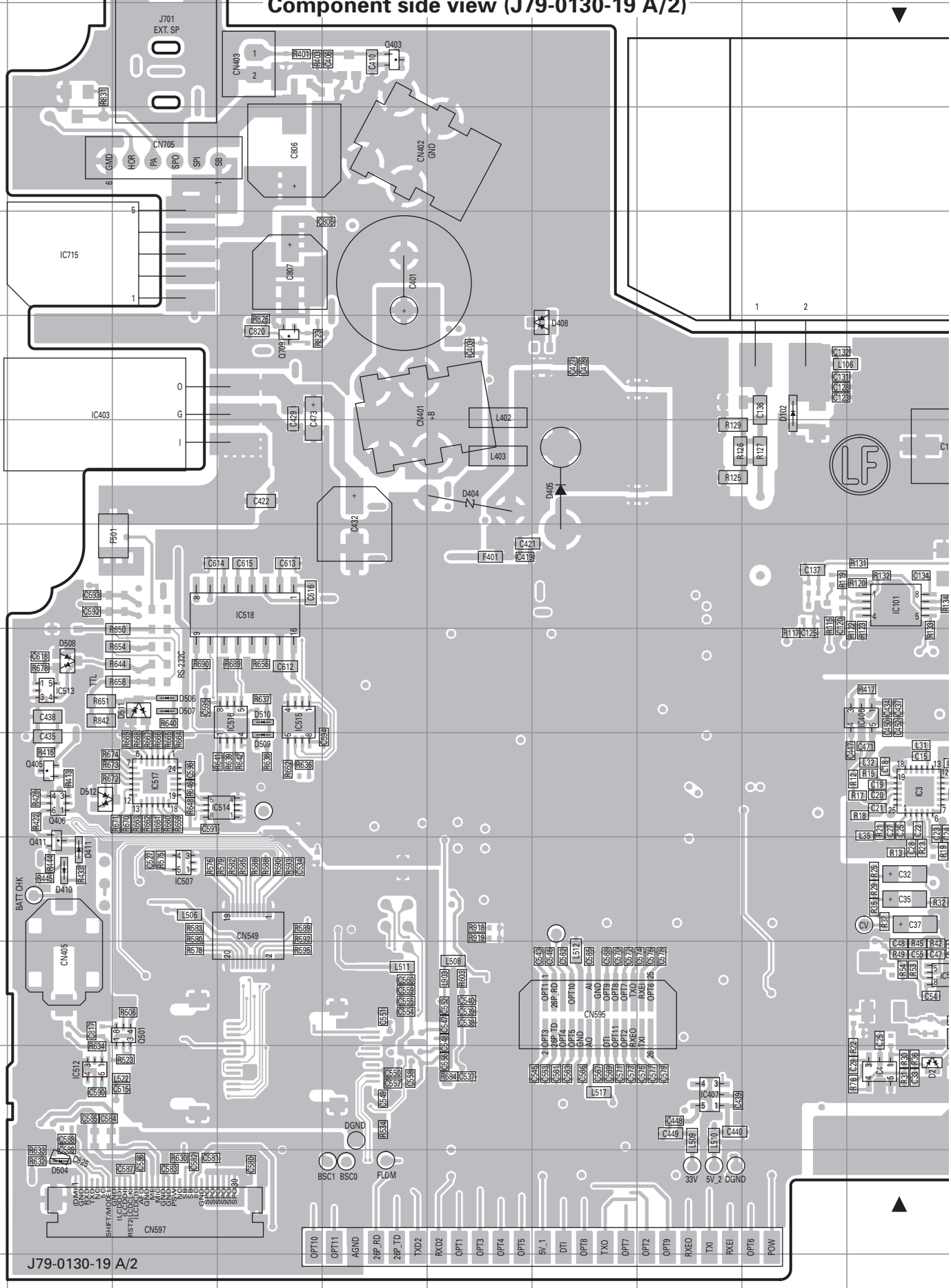

J79-0130-19 A/2

TX-RX UNIT (X57-7390-10) (A/2)
Component side view (J79-0130-19 A/2)

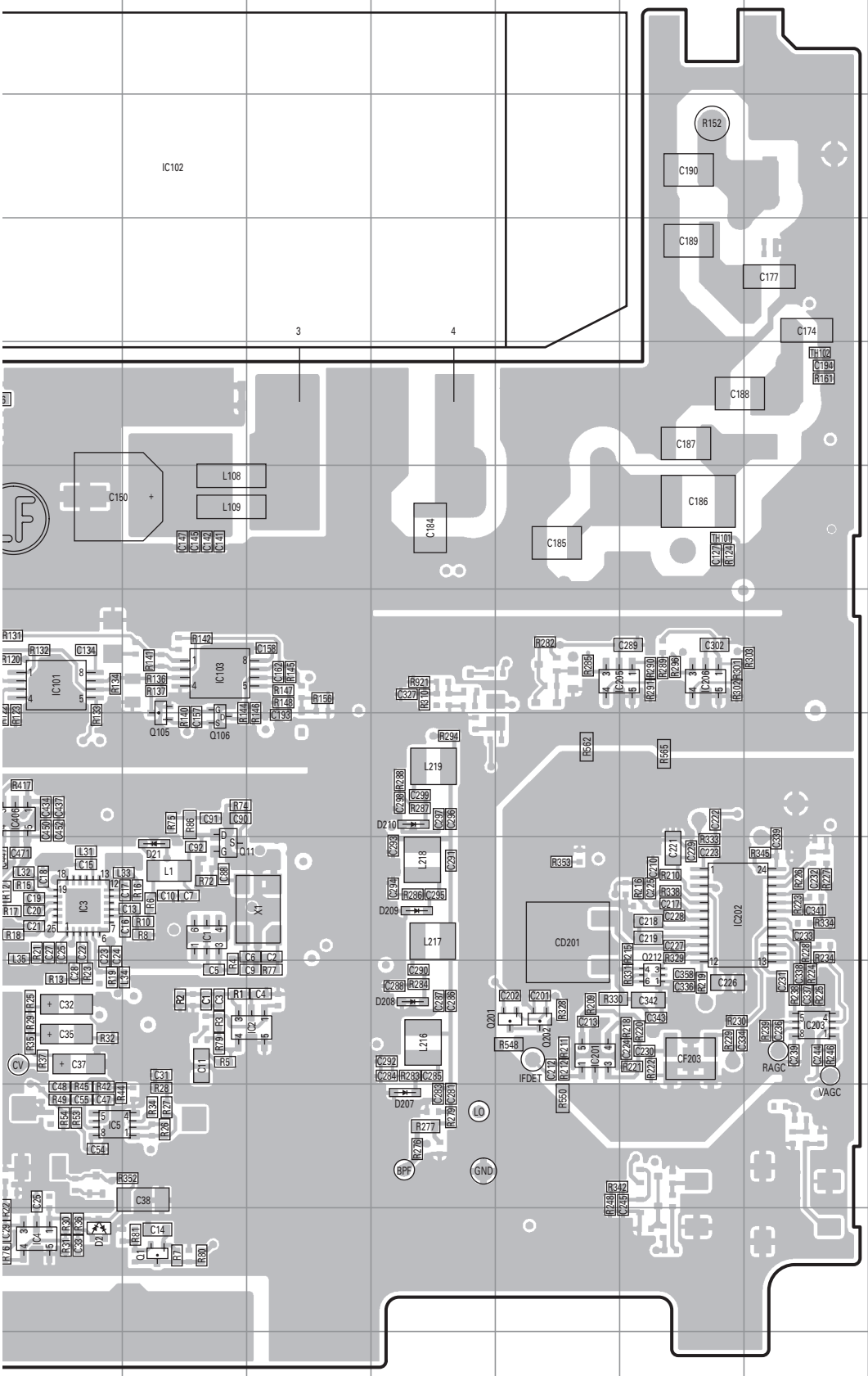

Ref. No.	Address	Ref. No.	Address
IC1	9K	Q201	10N
IC2	10L	Q202	10N
IC3	9J	Q212	10O
IC4	12J	Q403	2E
IC5	11J	Q405	9B
IC101	7J	Q406	9B
IC102	3K	Q411	10B
IC103	7K	Q501	11C
IC201	10N	Q709	5D
IC202	9O	D2	12J
IC203	10P	D21	9K
IC205	7N	D102	5I
IC206	7O	D207	11M
IC403	5B	D208	10M
IC406	8J	D209	9M
IC407	12H	D210	8M
IC507	10C	D404	6F
IC512	12B	D405	6G
IC513	8B	D408	5G
IC514	9D	D410	10B
IC515	8D	D411	10B
IC516	8D	D504	13B
IC517	9C	D506	8C
IC518	7D	D507	8C
IC715	4B	D508	8B
Q1	12K	D509	9D
Q11	9K	D510	8D
Q105	8K	D511	8C
Q106	8K	D512	9B

Component side

Layer 1	
Layer 2	
Layer 3	
Layer 4	
Layer 5	
Layer 6	

Foil side

NX-800 PC BOARD

TX-RX UNIT (X57-7390-10) (A/2)
Foil side view (J79-0130-19 A/2)

Ref. No.	Address	Ref. No.	Address	Ref. No.	Address
IC204	11F	Q6	10J	D4	11J
IC401	7M	Q7	10K	D7	11H
IC402	6N	Q8	10J	D8	11J
IC404	6P	Q9	10I	D9	11H
IC405	5N	Q10	10I	D10	11I
IC408	5M	Q101	7I	D11	11J
IC409	7N	Q102	7J	D12	11I
IC410	12J	Q203	8E	D14	11J
IC501	12P	Q204	9D	D101	9H
IC502	10Q	Q205	10D	D103	5F
IC503	12Q	Q208	10G	D106	6E
IC504	10N	Q210	7G	D108	6D
IC505	10P	Q401	3P	D109	5D
IC506	13P	Q402	4P	D110	4D
IC508	10O	Q404	4P	D201	10E
IC509	9P	Q407	5P	D202	10F
IC510	12O	Q408	5P	D205	9H
IC511	9O	Q409	7O	D212	7E
IC701	12M	Q410	7N	D213	7E
IC702	8N	Q412	6N	D216	7D
IC703	12L	Q413	5P	D401	3O
IC704	10M	Q414	5P	D403	4P
IC705	12L	Q415	7O	D406	3P
IC706	8M	Q416	5N	D407	4N
IC707	12M	Q417	12I	D409	4N
IC708	8N	Q701	12K	D412	5N
IC709	8O	Q702	11L	D501	13O
IC710	11M	Q703	12M	D502	13O
IC711	11L	Q704	7P	D503	9O
IC712	9L	Q705	8P	D702	11L
IC713	11K	Q706	8R	D703	11L
IC714	11L	Q707	8R	D704	7O
Q3	9I	Q708	10L	D705	8O
Q4	9J	Q710	5Q	D706	9L
Q5	10I	D3	11I	D707	9M

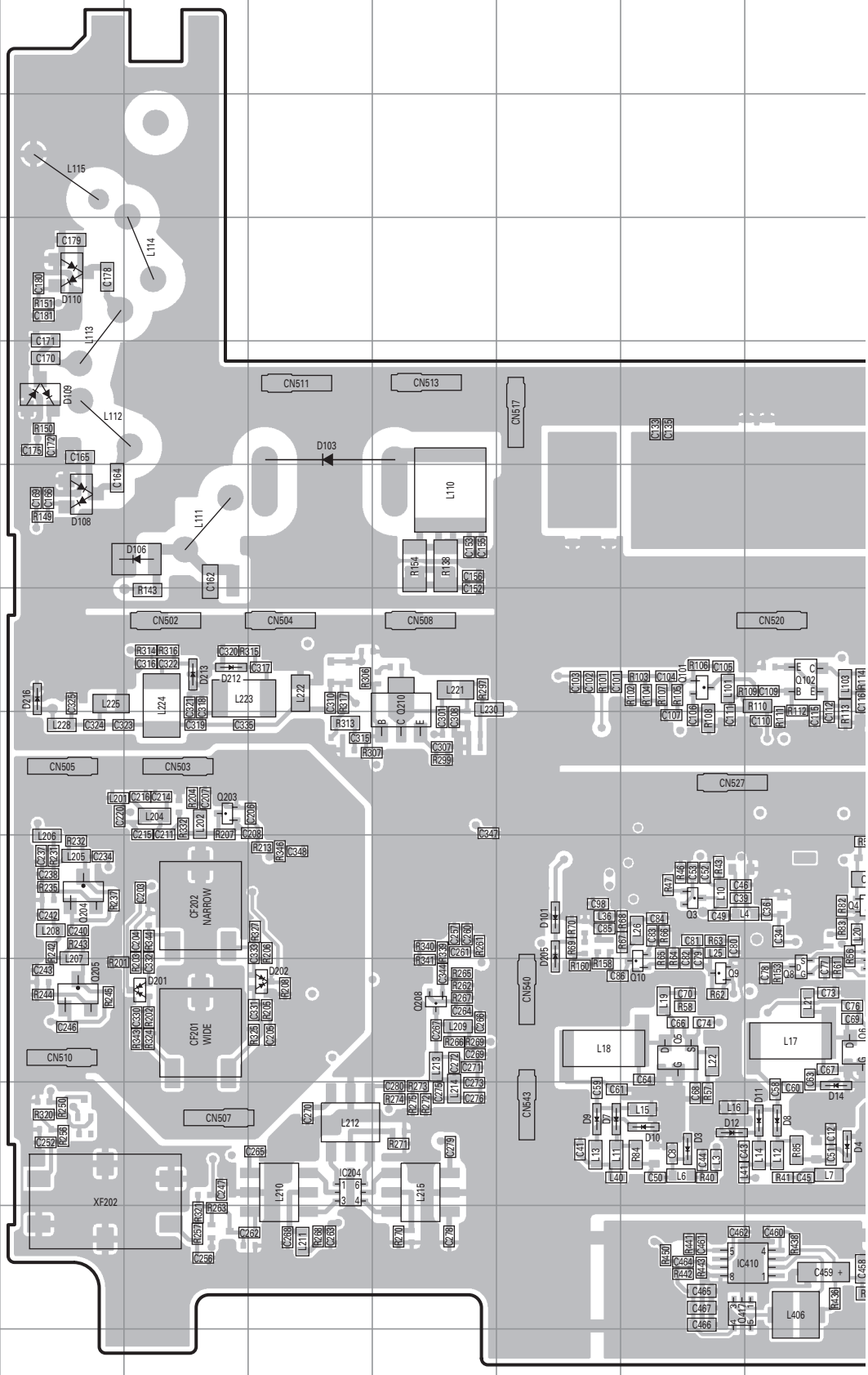

Component side

Layer 1
Layer 2
Layer 3
Layer 4
Layer 5
Layer 6

Foil side

PC BOARD NX-800

TX-RX UNIT (X57-7390-10) (A/2)
Foil side view (J79-0130-19 A/2)

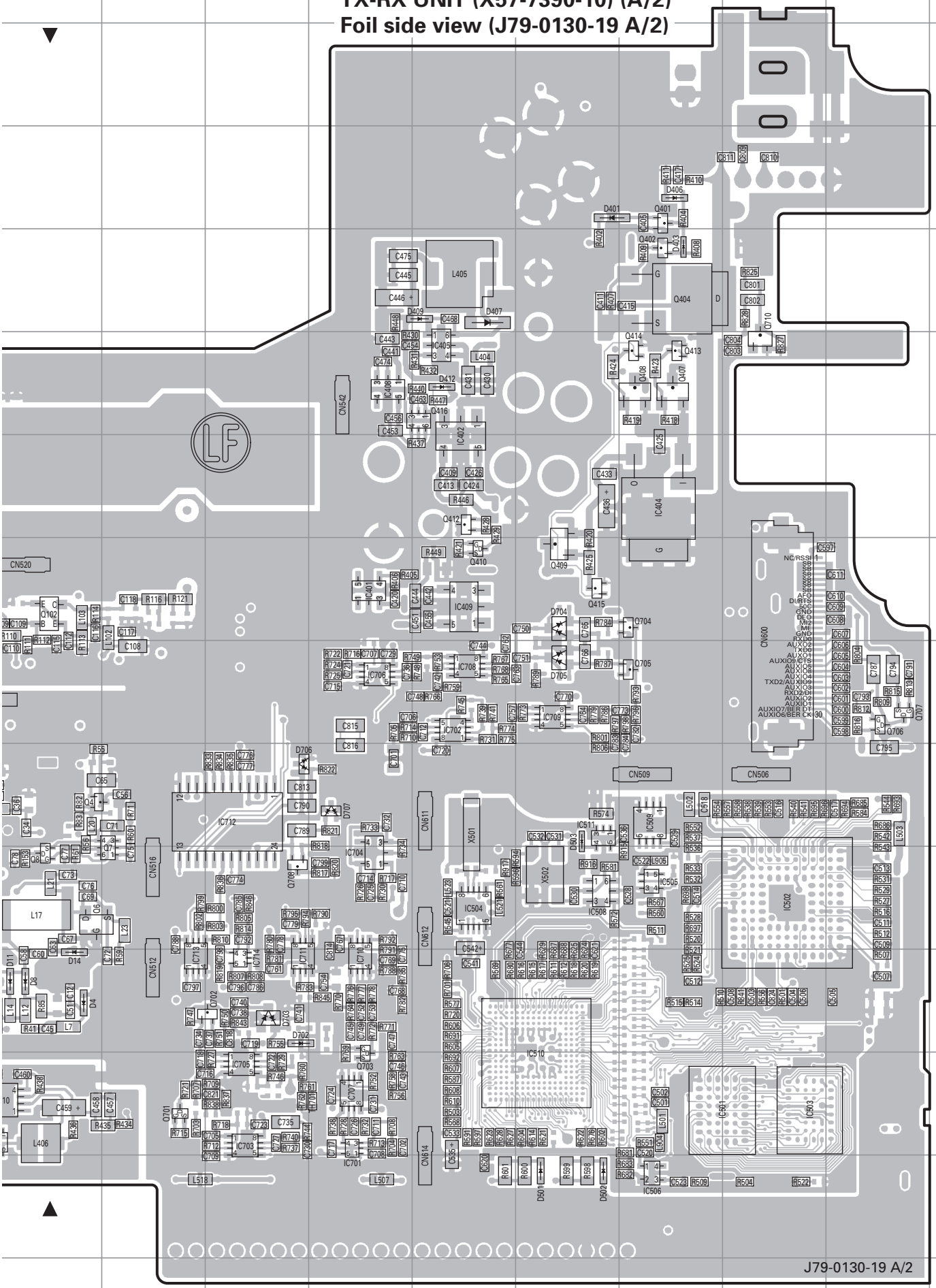

NX-800 PC BOARD

DISPLAY UNIT (X54-3640-10) Component side view (J79-0157-19)

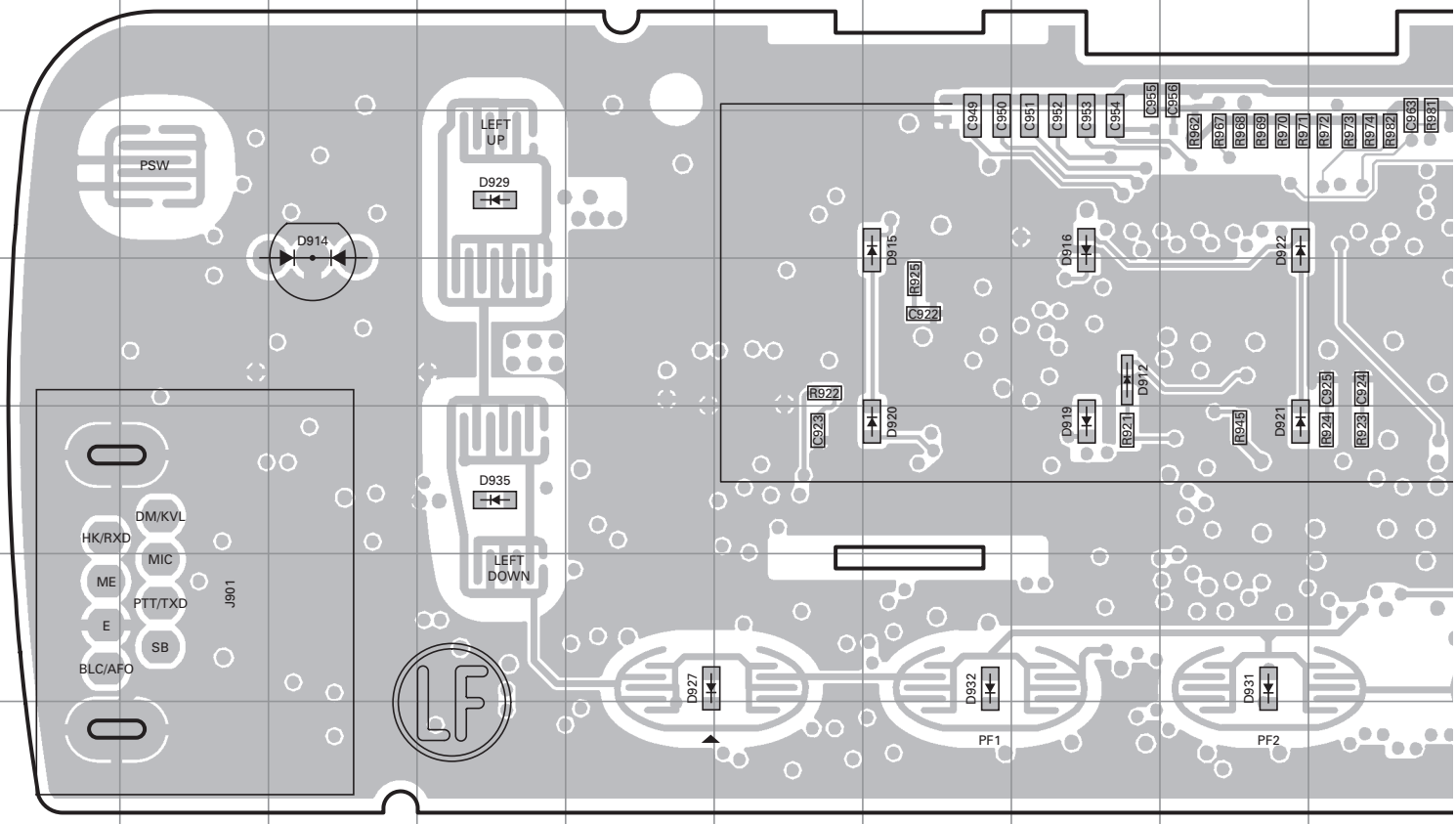

DISPLAY UNIT (X54-3640-10) Foil side view (J79-0157-19)

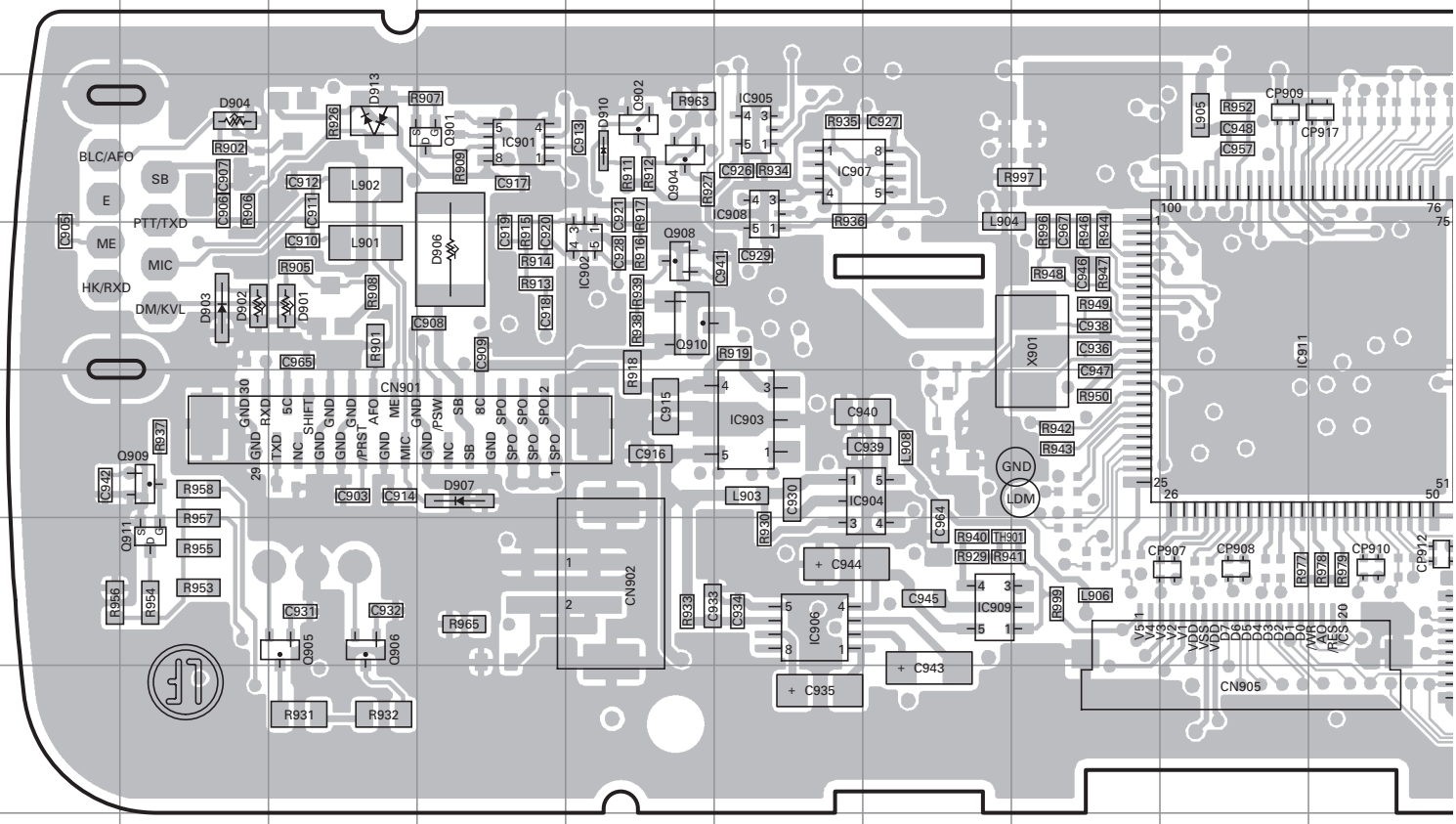

DISPLAY UNIT (X54-3640-10) Component side view (J79-0157-19)

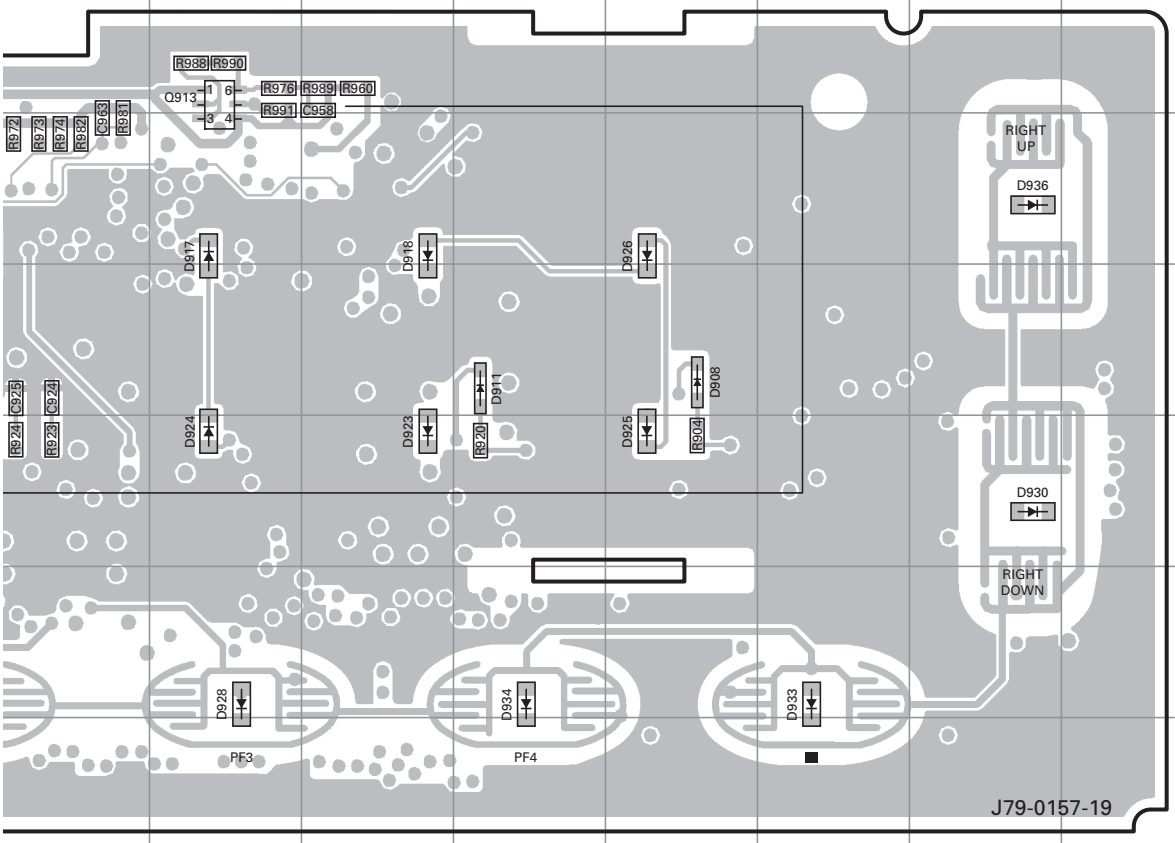

Ref. No.	Address	Ref. No.	Address
Q913	2K	D924	5K
D908	4N	D925	5N
D911	4M	D926	3M
D912	4H	D927	6E
D914	3C	D928	6K
D915	3G	D929	3D
D916	3H	D930	5P
D917	3K	D931	6I
D918	3L	D932	6G
D919	5H	D933	6O
D920	5G	D934	6M
D921	5I	D935	5D
D922	3I	D936	3P
D923	5L		

Component side
Layer 1
Layer 2
Layer 3
Layer 4
Foil side

DISPLAY UNIT (X54-3640-10) Foil side view (J79-0157-19)

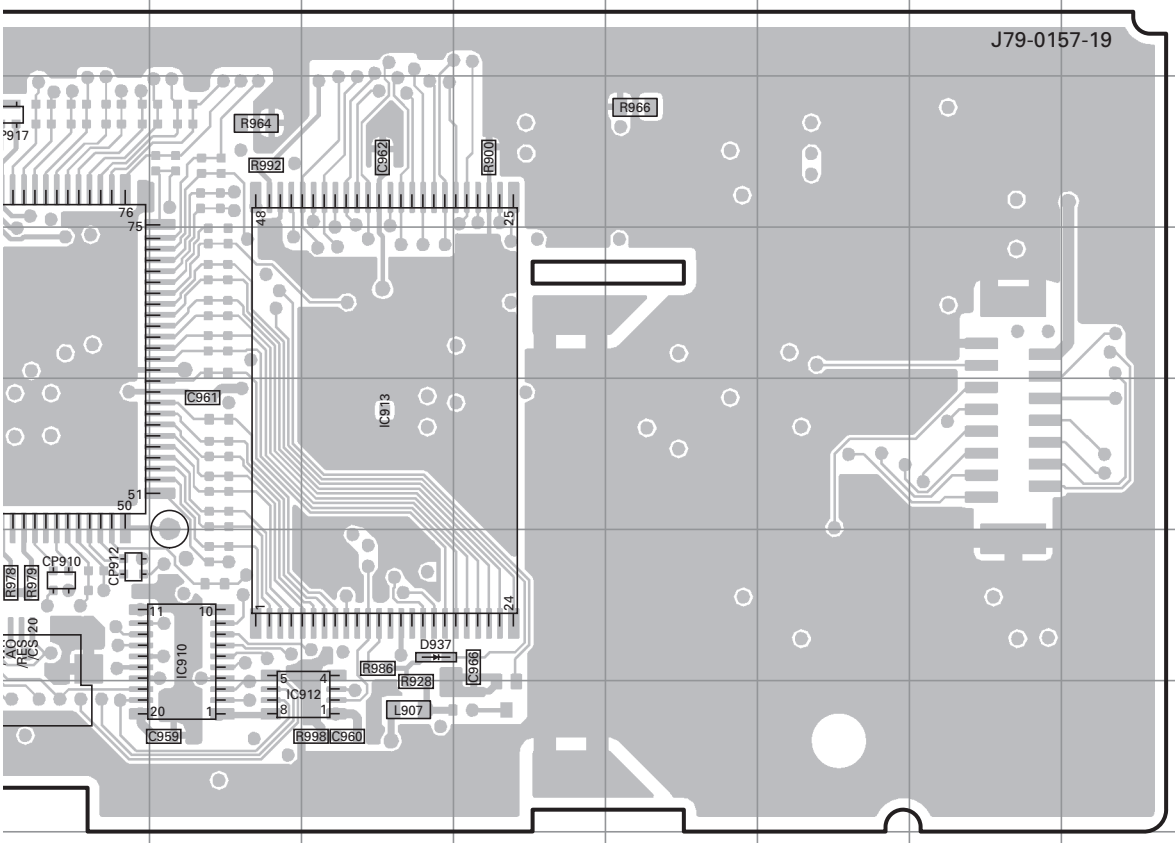

Ref. No.	Address	Ref. No.	Address
IC901	9D	Q905	12C
IC902	10E	Q906	12C
IC903	11F	Q908	10E
IC904	11G	Q909	11B
IC905	9F	Q910	10E
IC906	12F	Q911	12B
IC907	9F	D901	10C
IC908	9F	D902	10B
IC909	12G	D903	10B
IC910	12K	D904	9B
IC911	10I	D906	10D
IC912	13L	D907	11D
IC913	11L	D910	9E
Q901	9D	D913	9C
Q902	9E	D937	12L
Q904	9E		

Component side
Layer 1
Layer 2
Layer 3
Layer 4
Foil side

NX-800 SCHEMATIC DIAGRAM

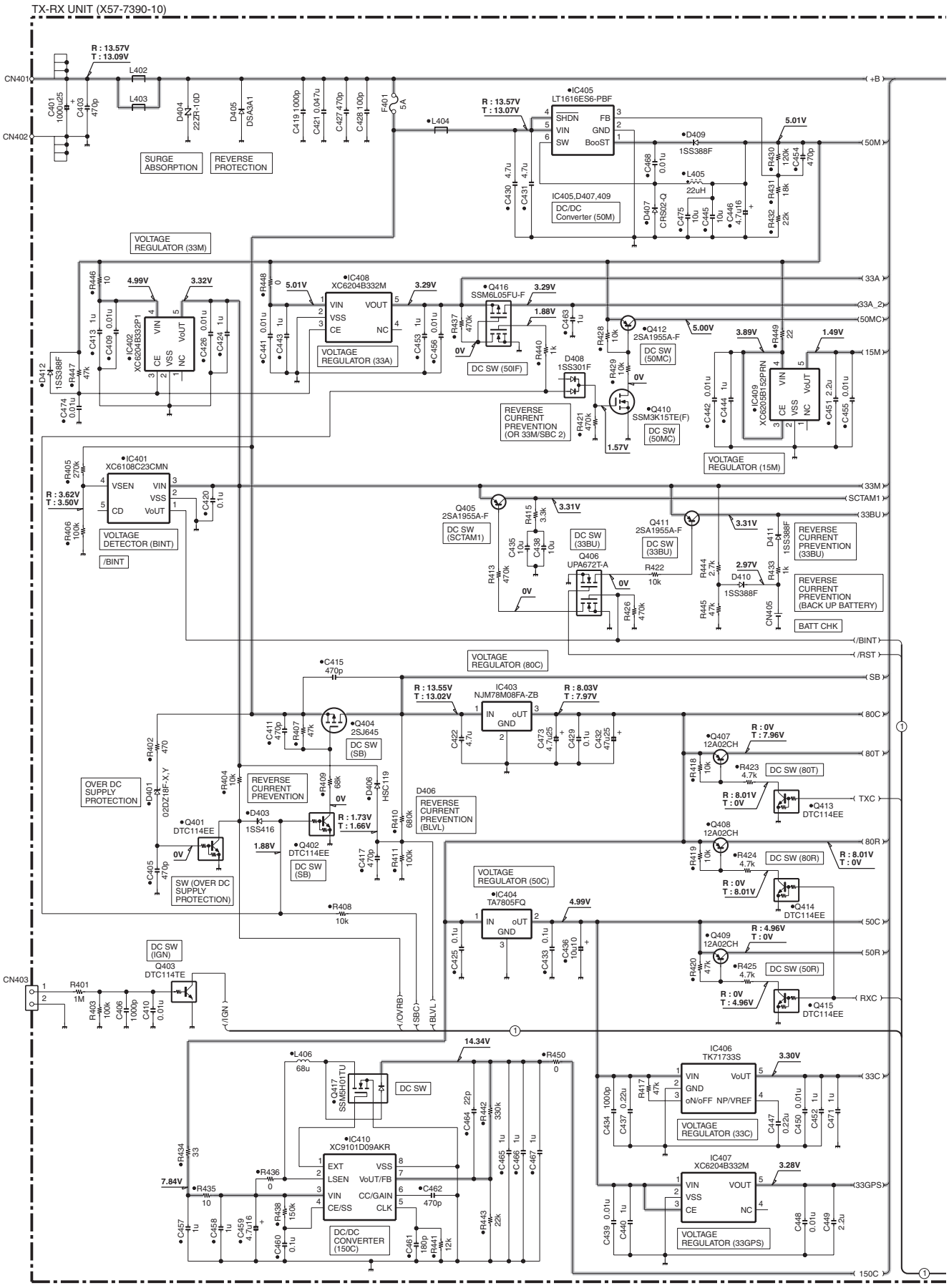

SCHEMATIC DIAGRAM NX-800

TX-RX UNIT (X57-7390-10)

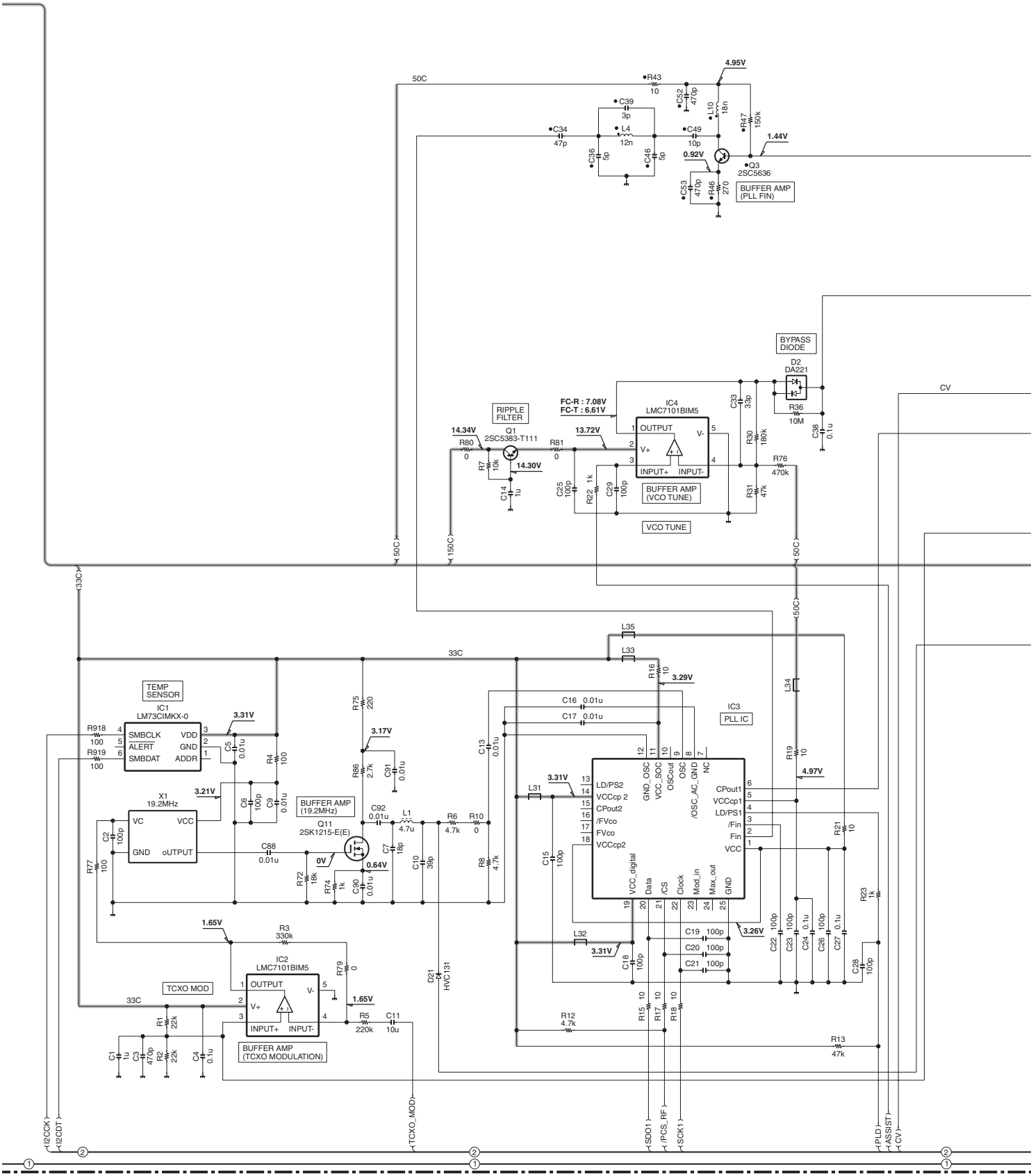

NX-800 SCHEMATIC DIAGRAM

TX-RX UNIT (X57-7390-10)

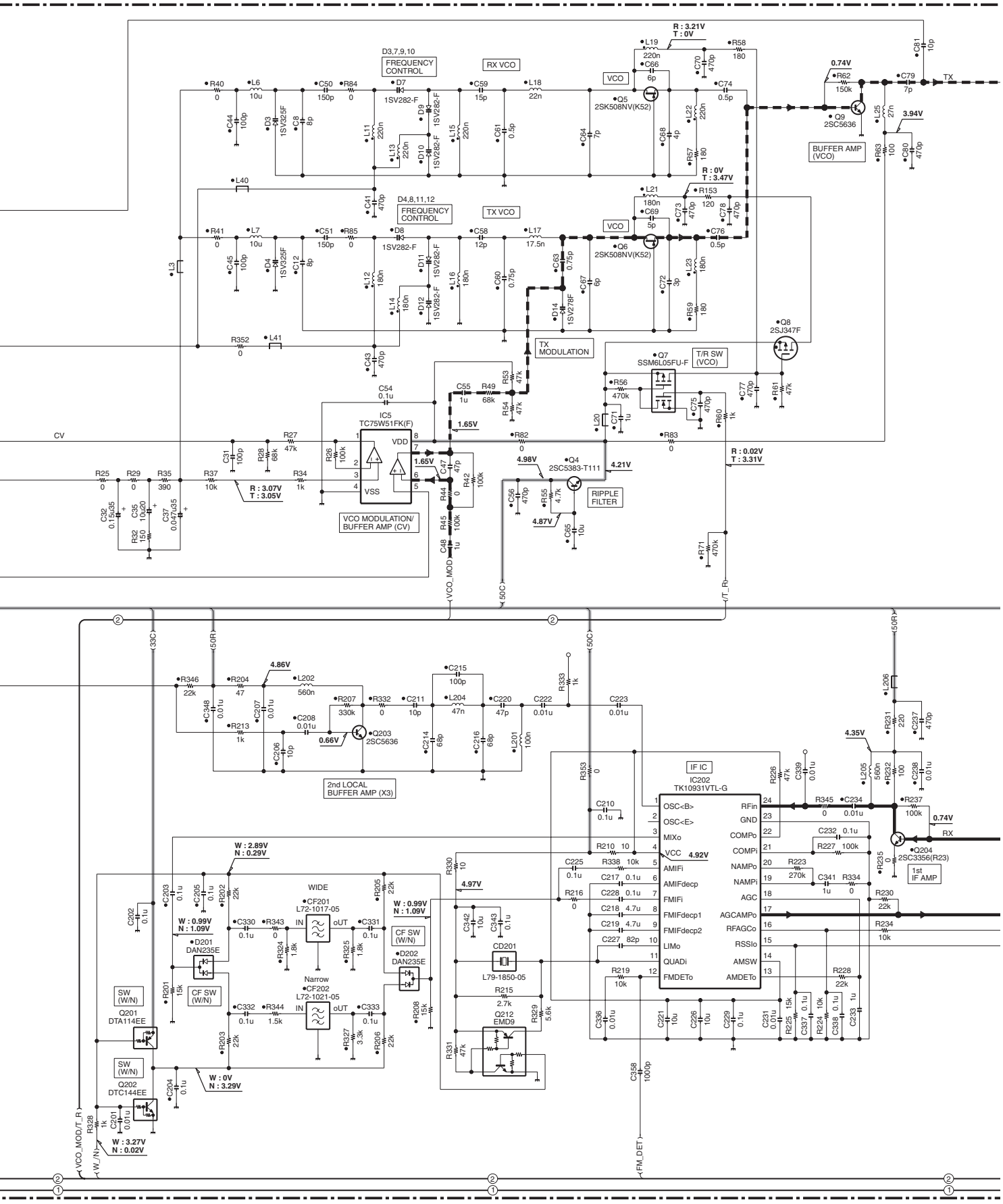

SCHEMATIC DIAGRAM NX-800

TX-RX UNIT (X57-7390-10)

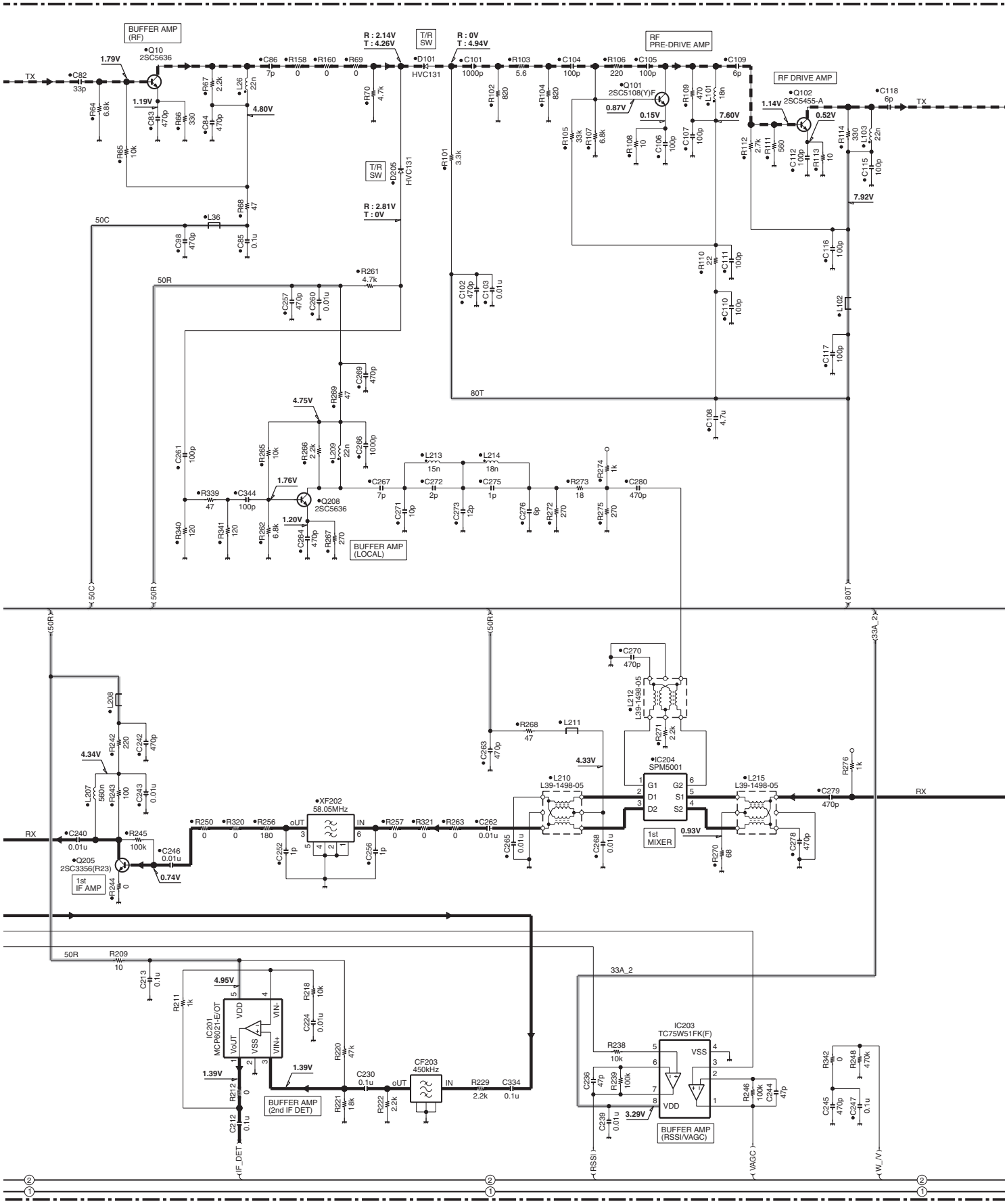

NX-800 SCHEMATIC DIAGRAM

TX-RX UNIT (X57-7390-10)

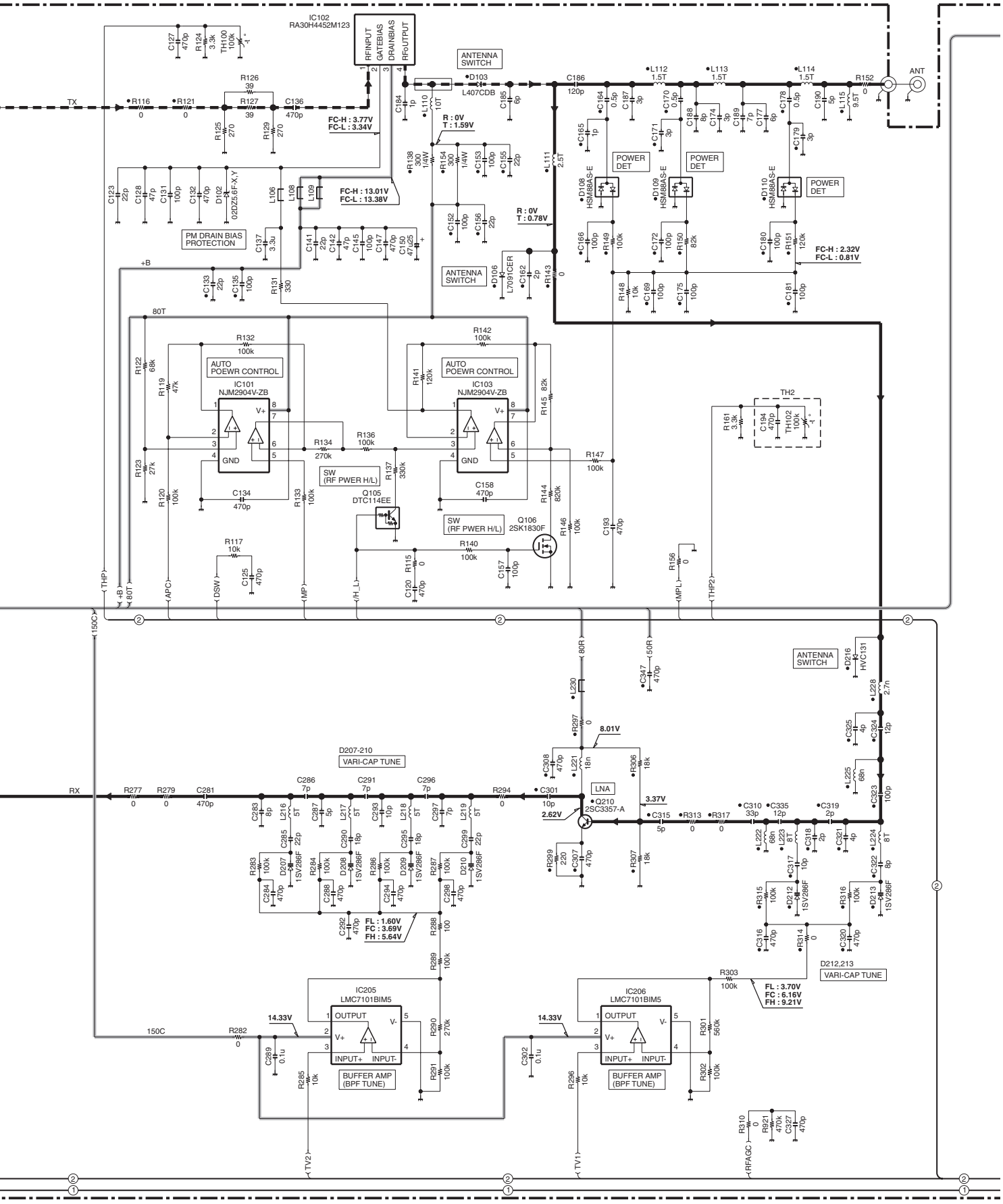

SCHEMATIC DIAGRAM NX-800

TX-RX UNIT (X57-7390-10)

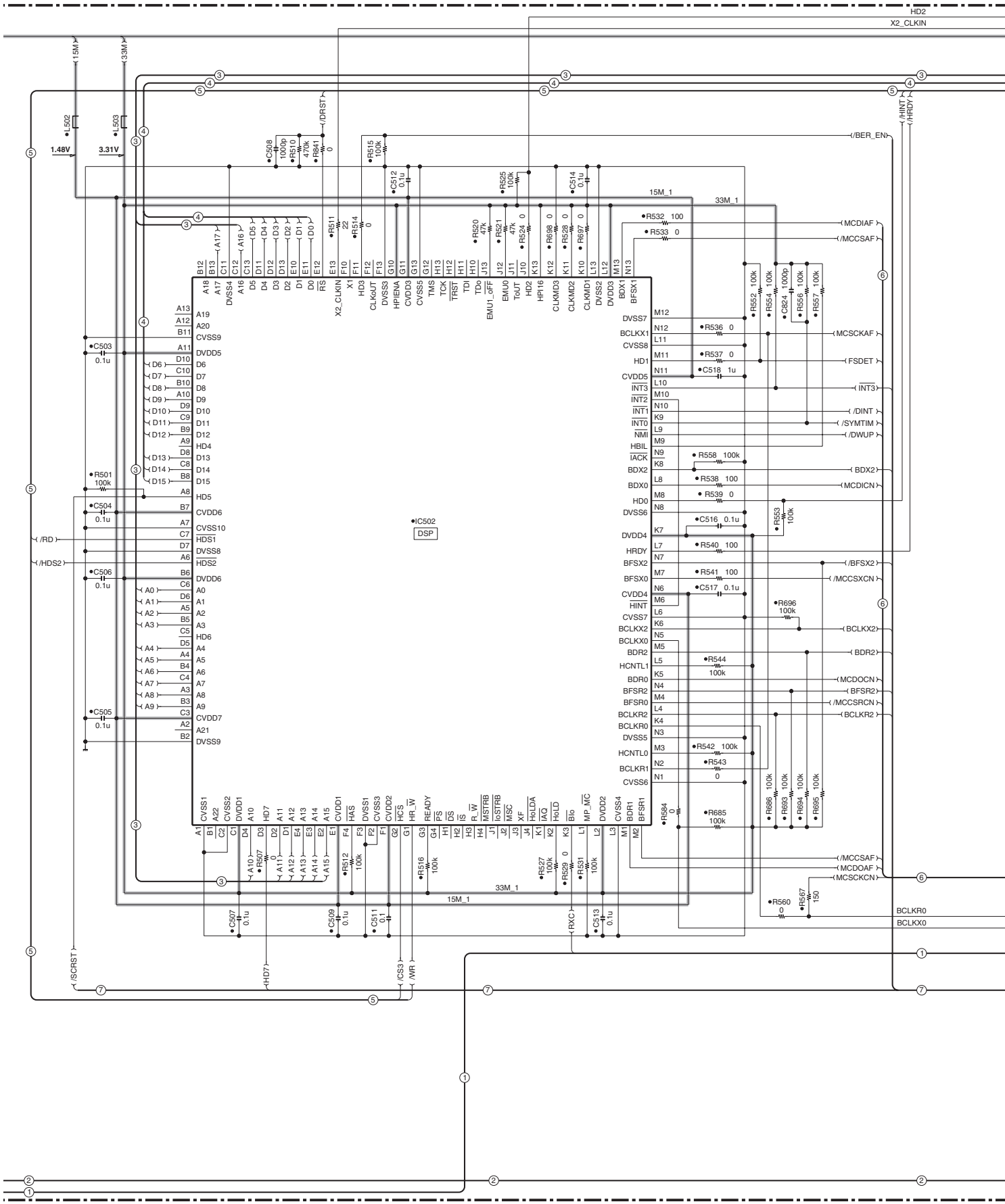

NX-800 SCHEMATIC DIAGRAM

TX-RX UNIT (X57-7390-10)

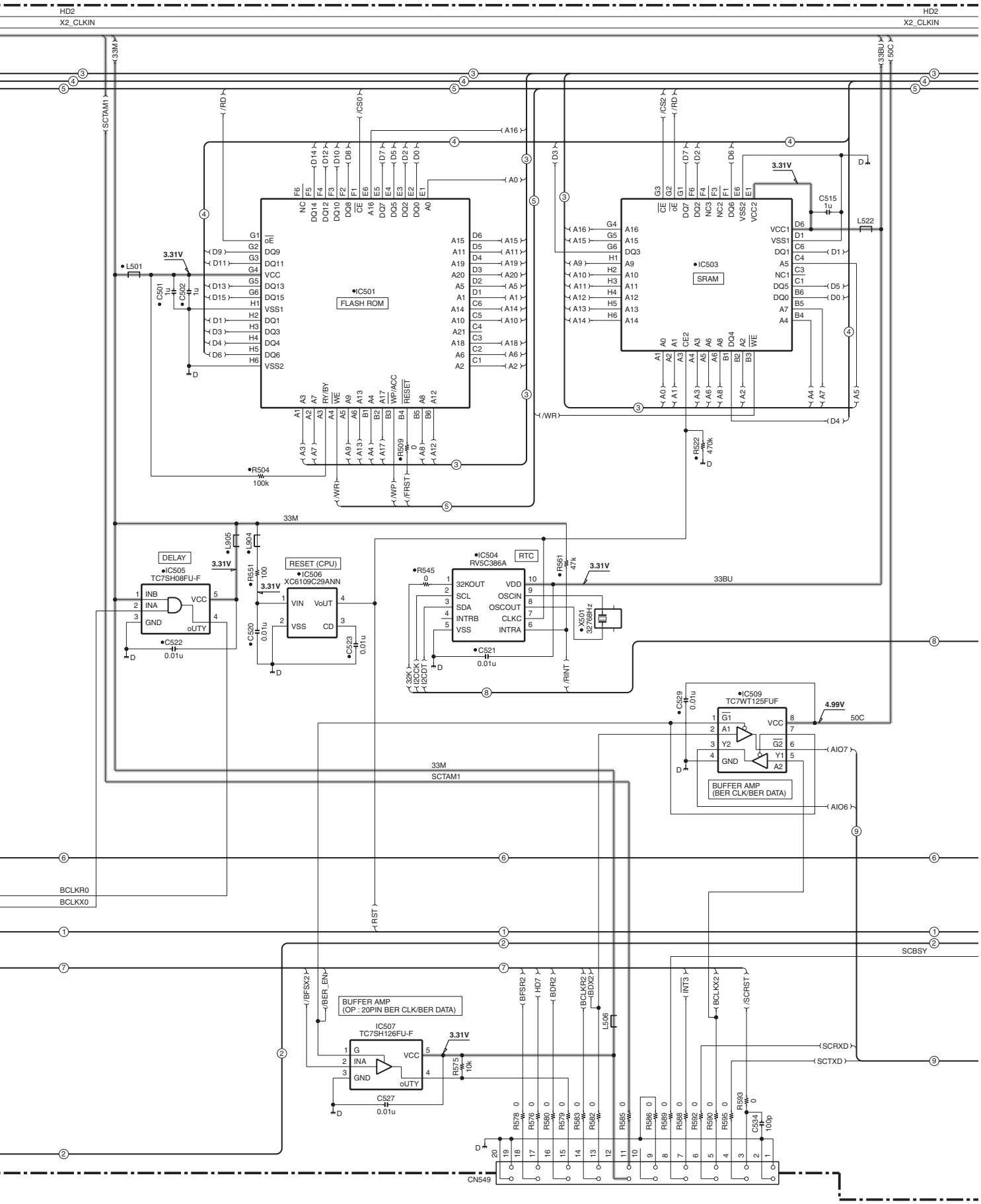

SCHEMATIC DIAGRAM NX-800

TX-RX UNIT (X57-7390-10)

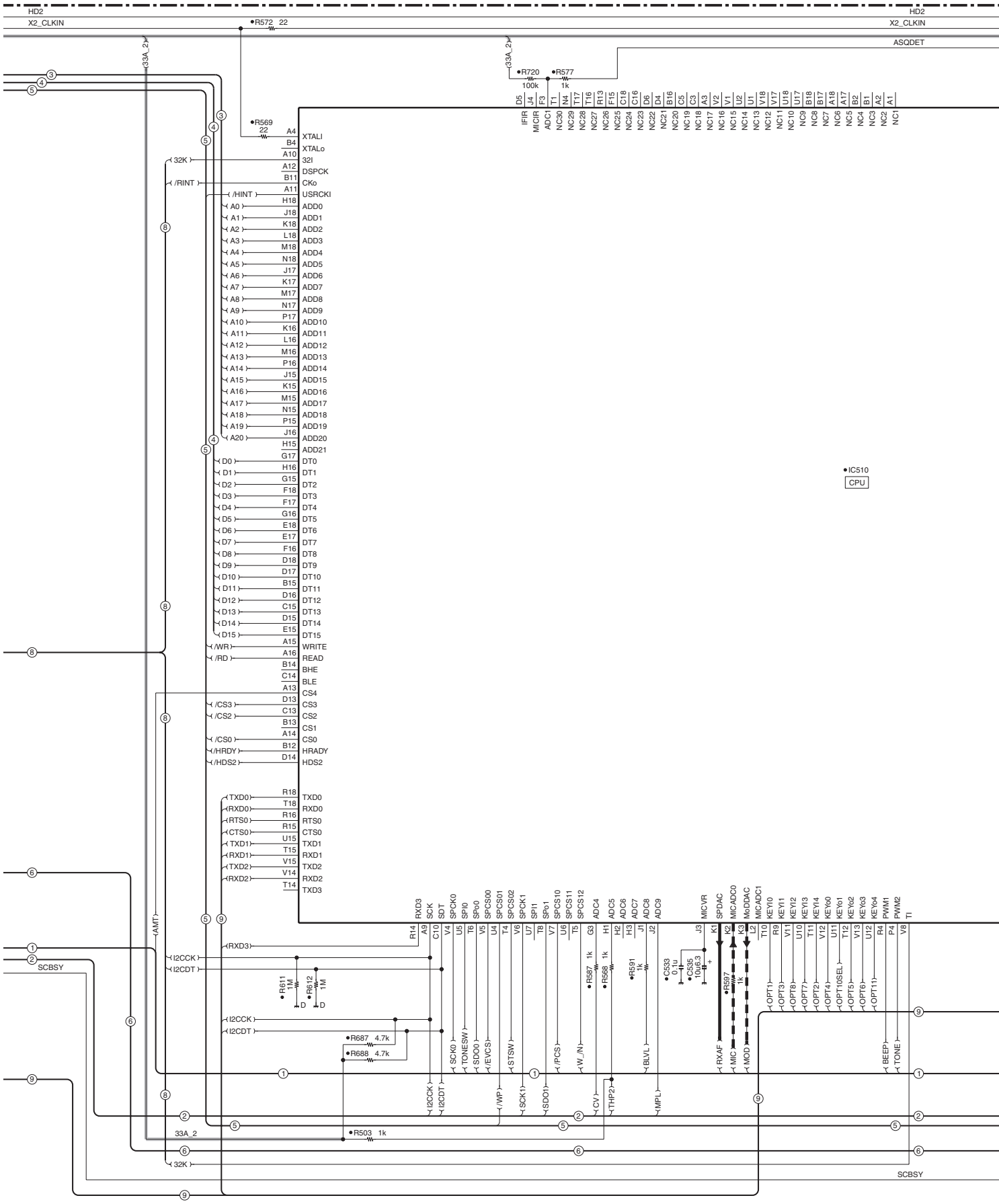

NX-800 SCHEMATIC DIAGRAM

TX-RX UNIT (X57-7390-10)

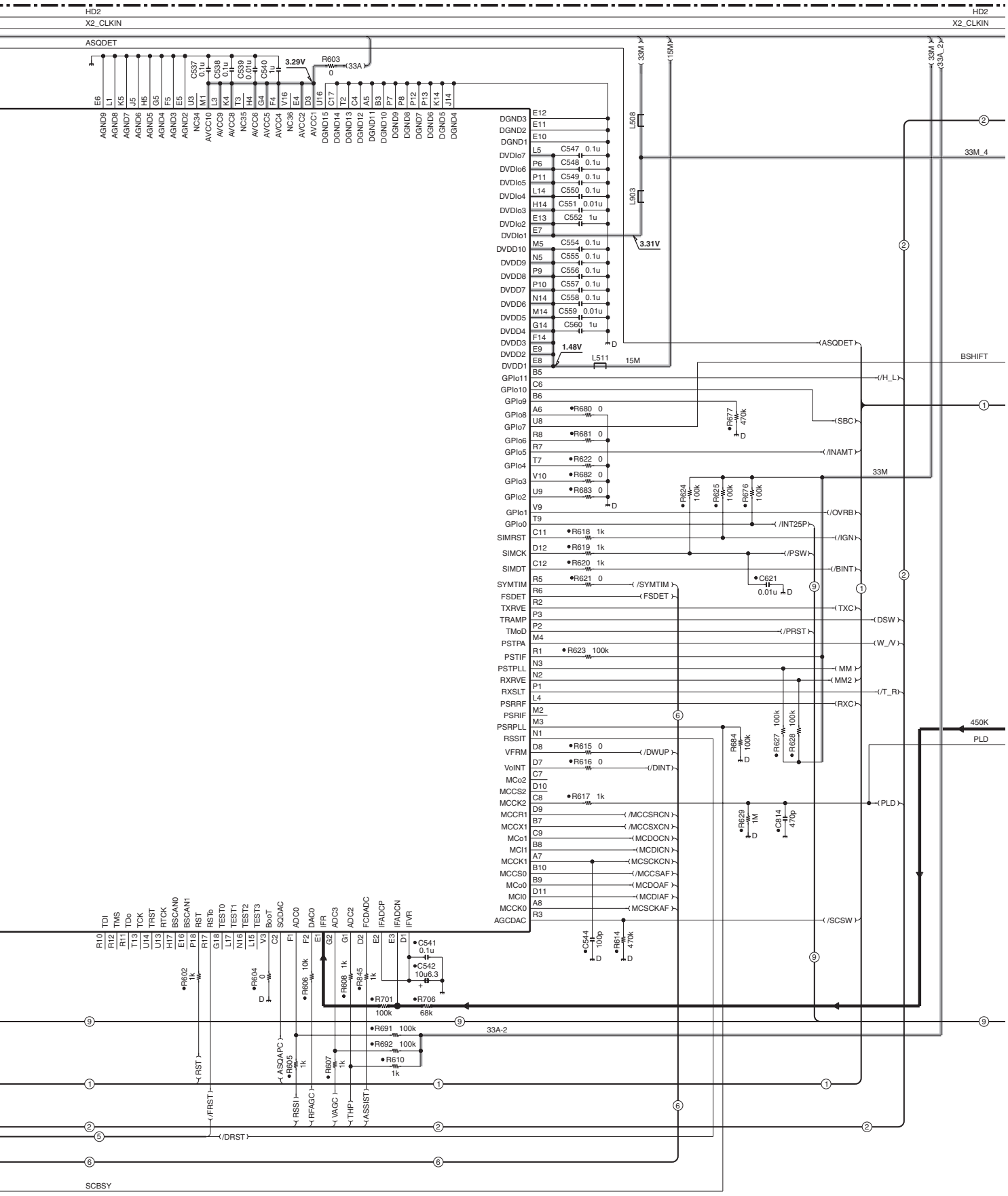

SCHEMATIC DIAGRAM NX-800

TX-RX UNIT (X57-7390-10)

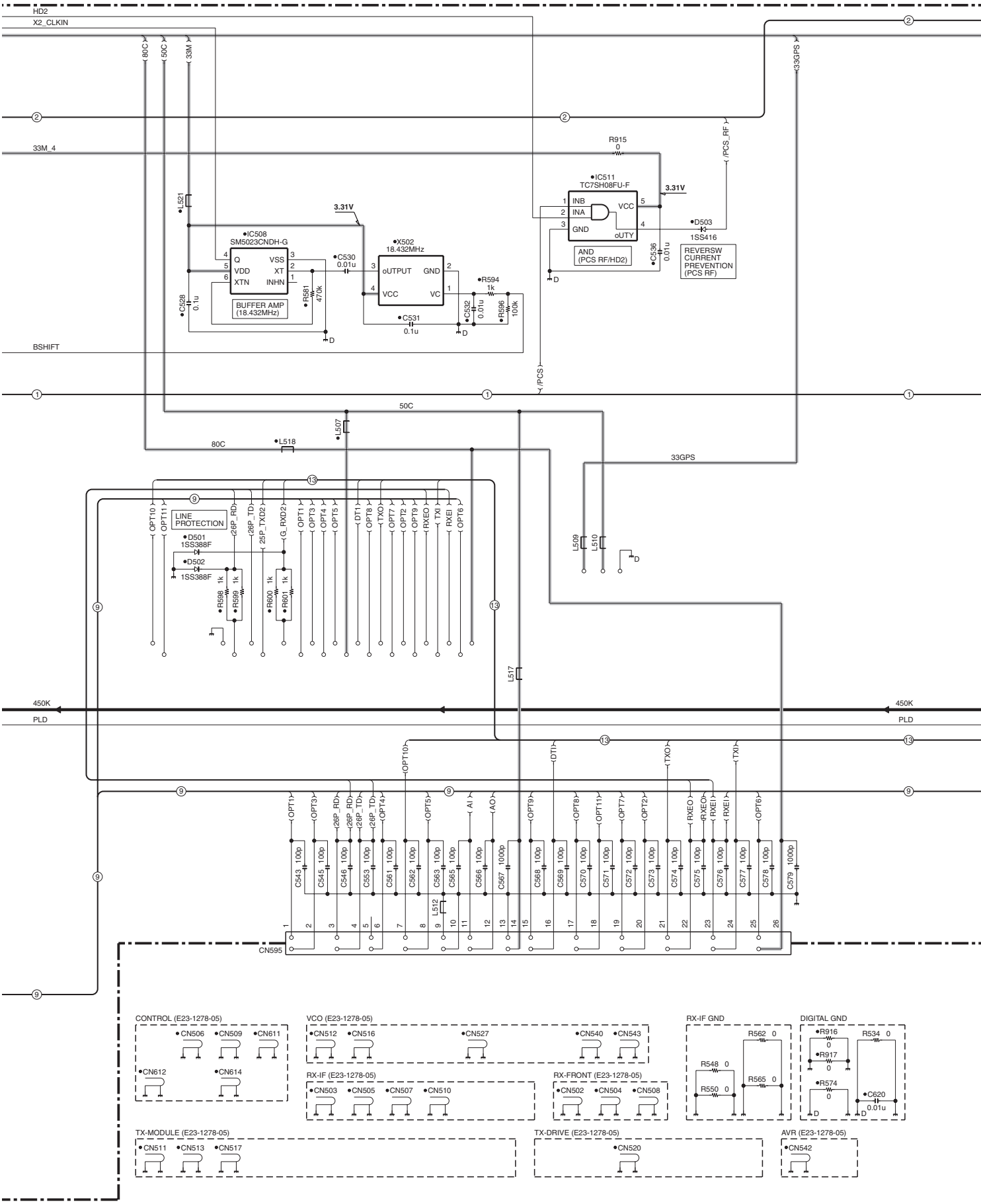

NX-800 SCHEMATIC DIAGRAM

TX-RX UNIT (X57-7390-10)

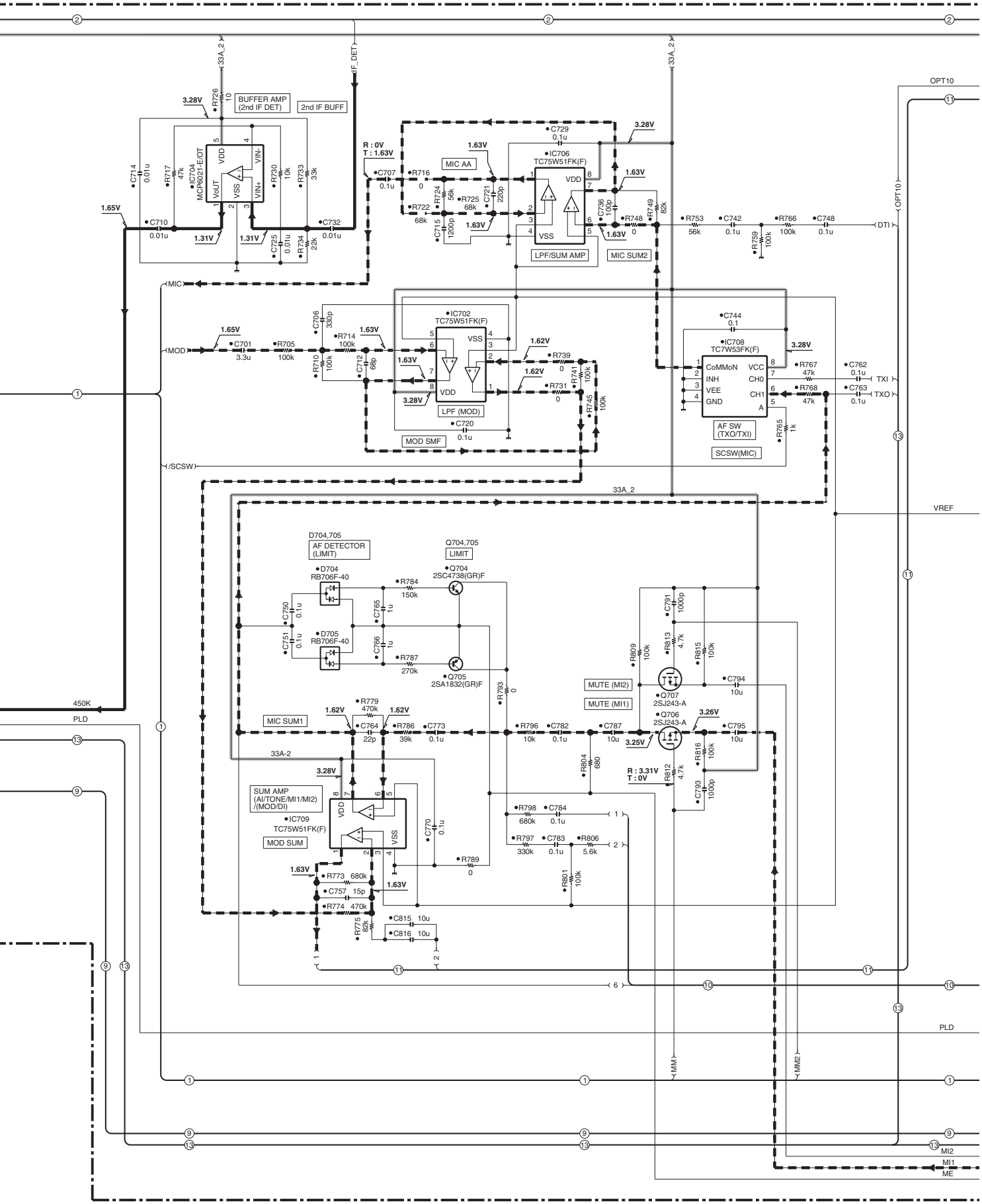

SCHEMATIC DIAGRAM NX-800

TX-RX UNIT (X57-7390-10)

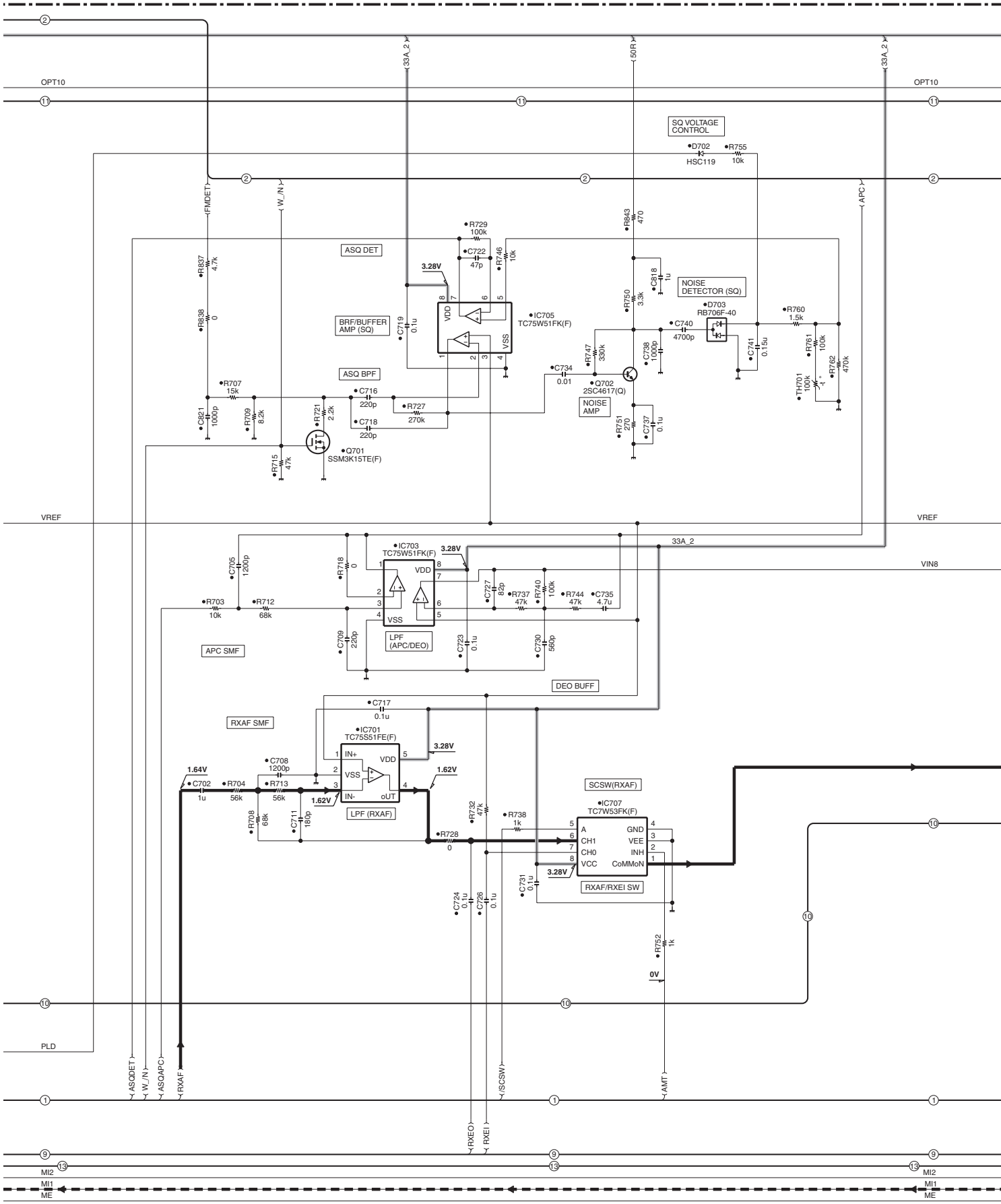

NX-800 SCHEMATIC DIAGRAM

TX-RX UNIT (X57-7390-10)

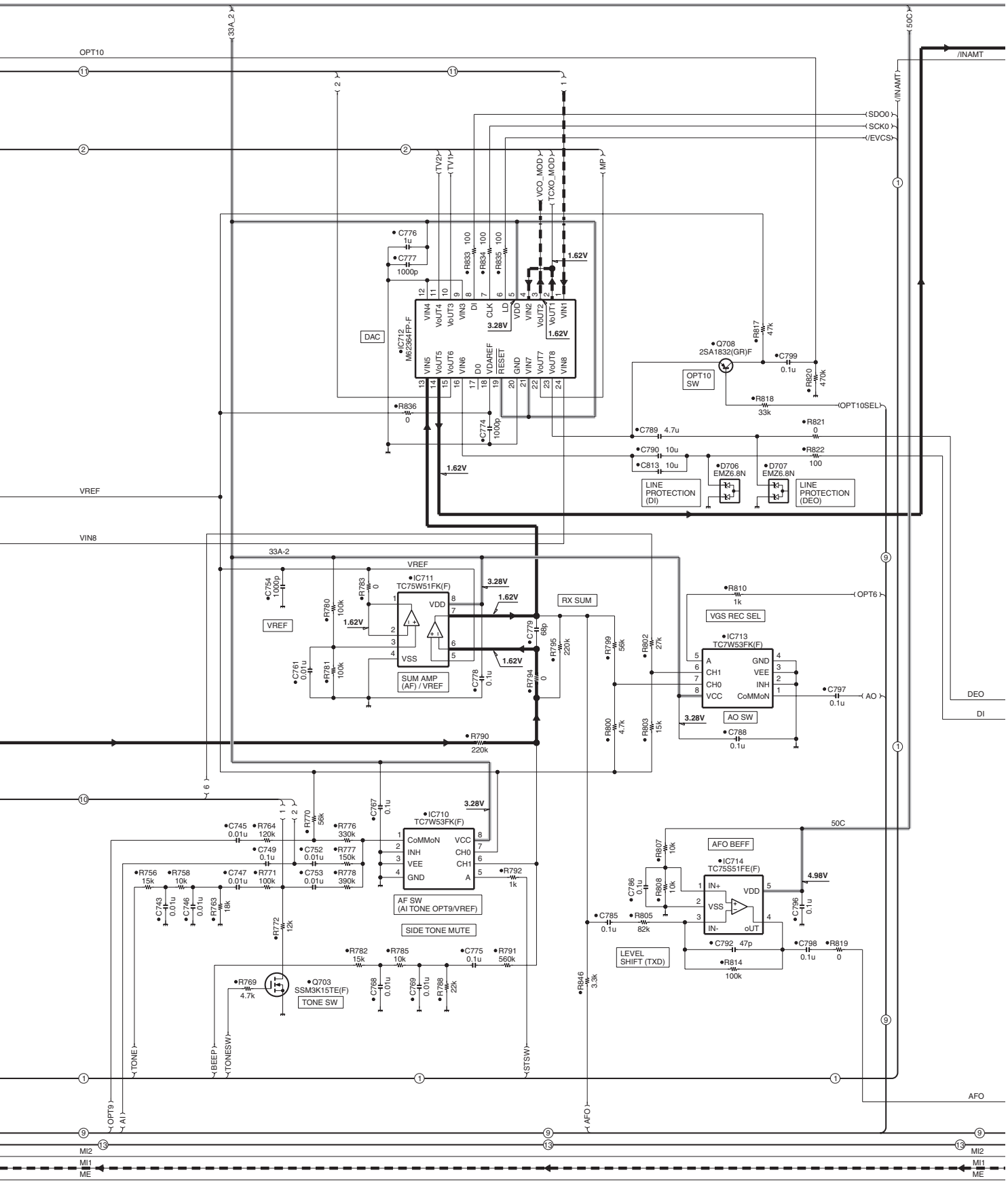

SCHEMATIC DIAGRAM NX-800

TX-RX UNIT (X57-7390-10)

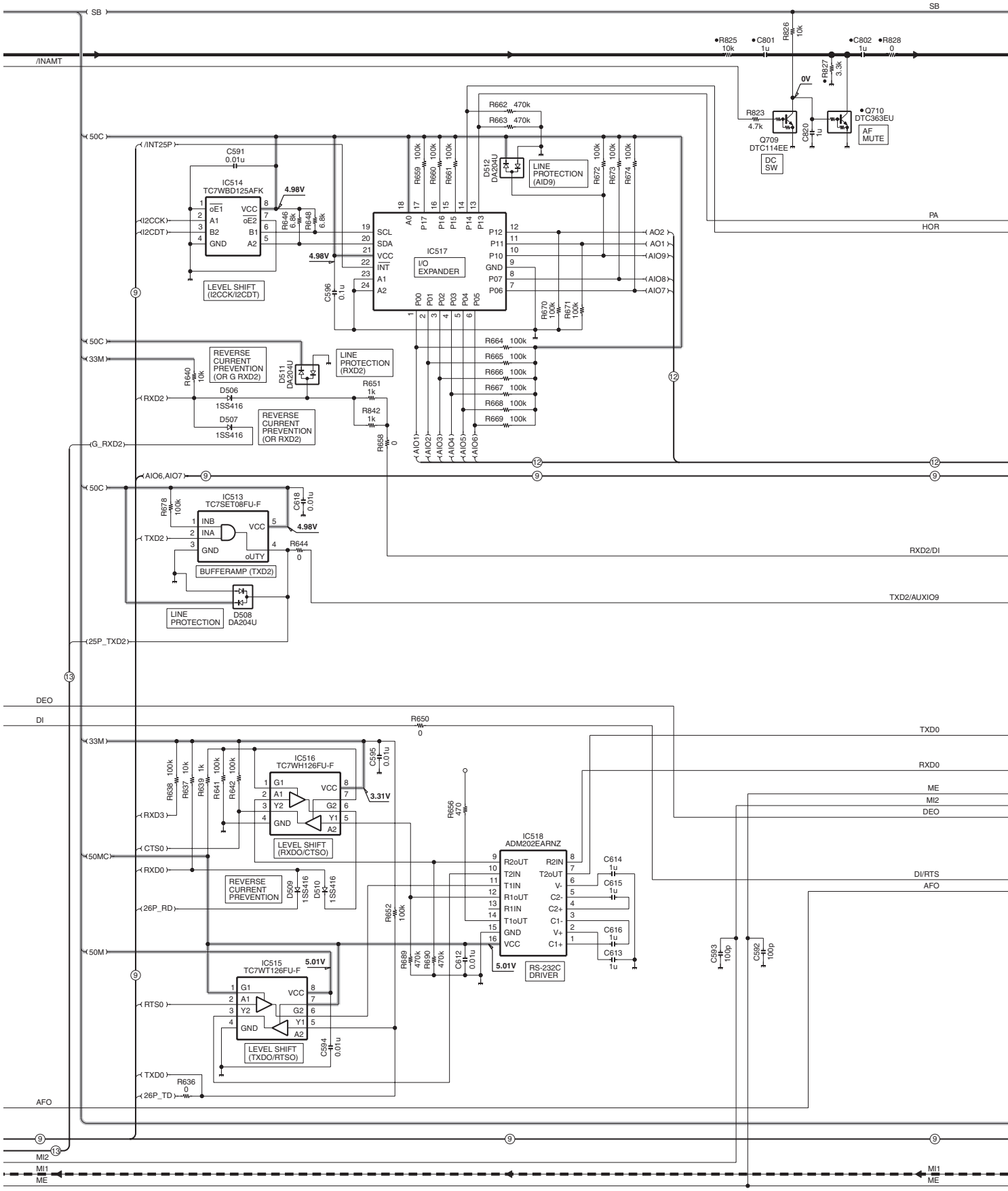

NX-800 SCHEMATIC DIAGRAM

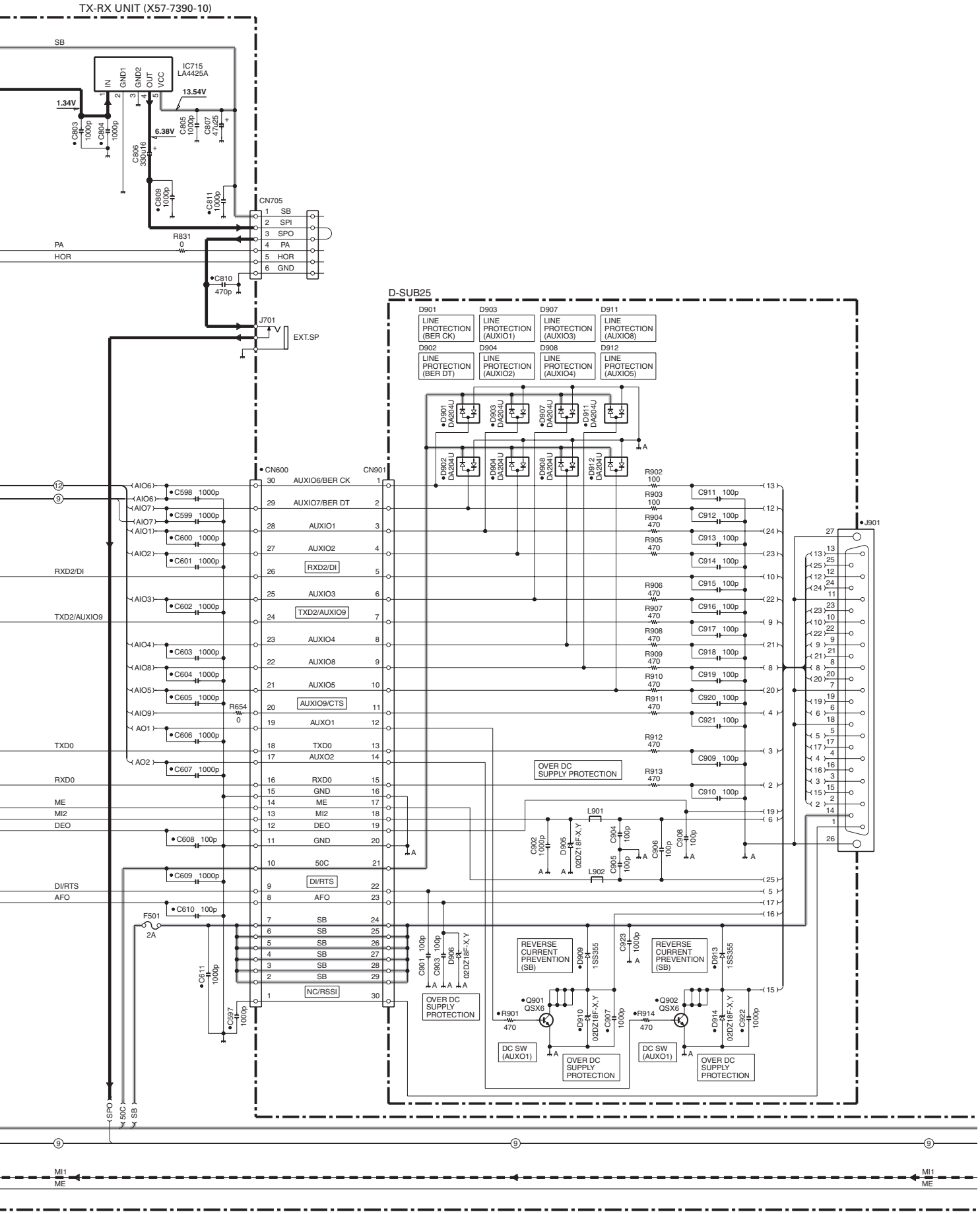

SCHEMATIC DIAGRAM NX-800

Note : The components marked with a dot (●) are parts of layer 1.

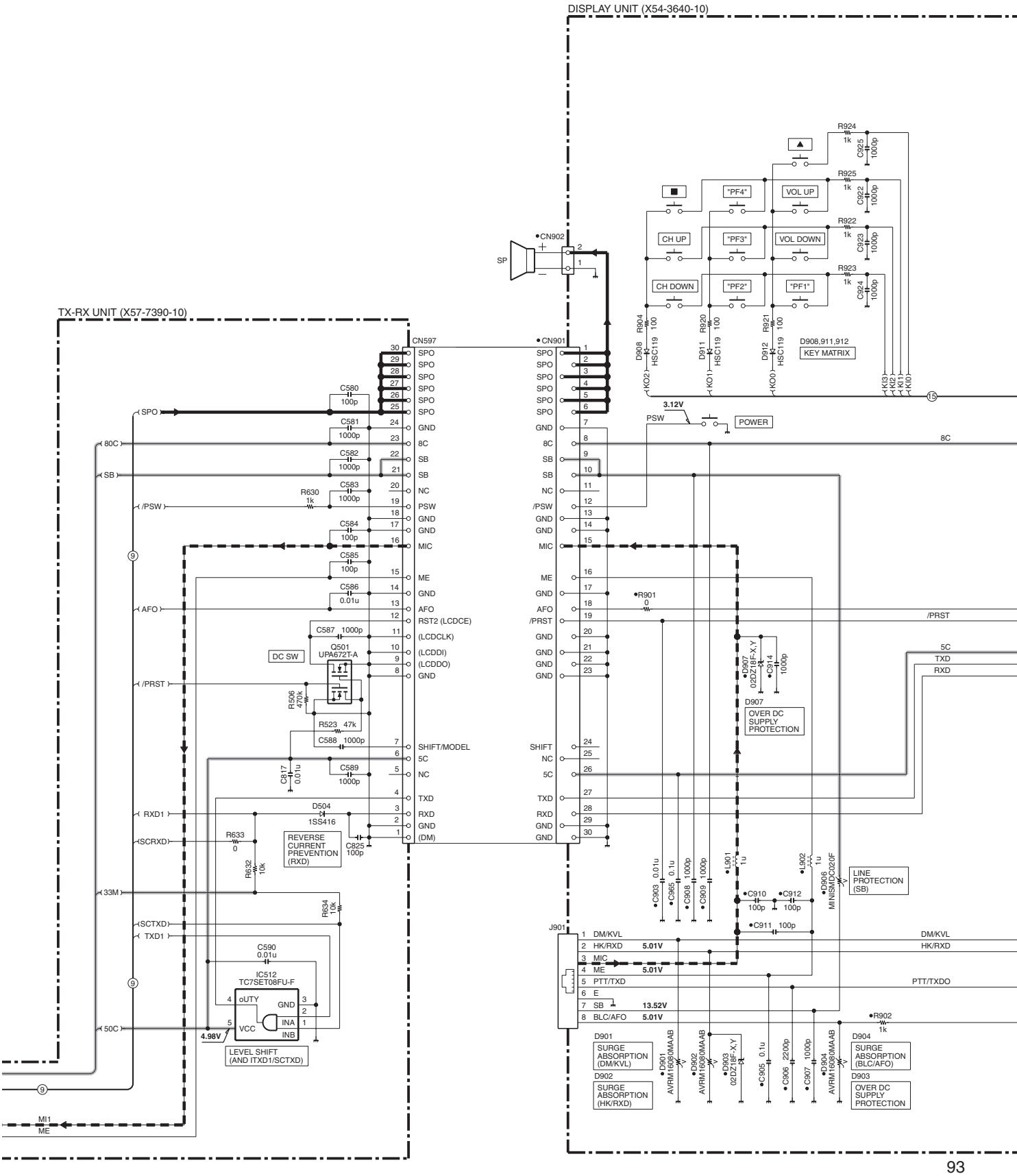

NX-800 SCHEMATIC DIAGRAM

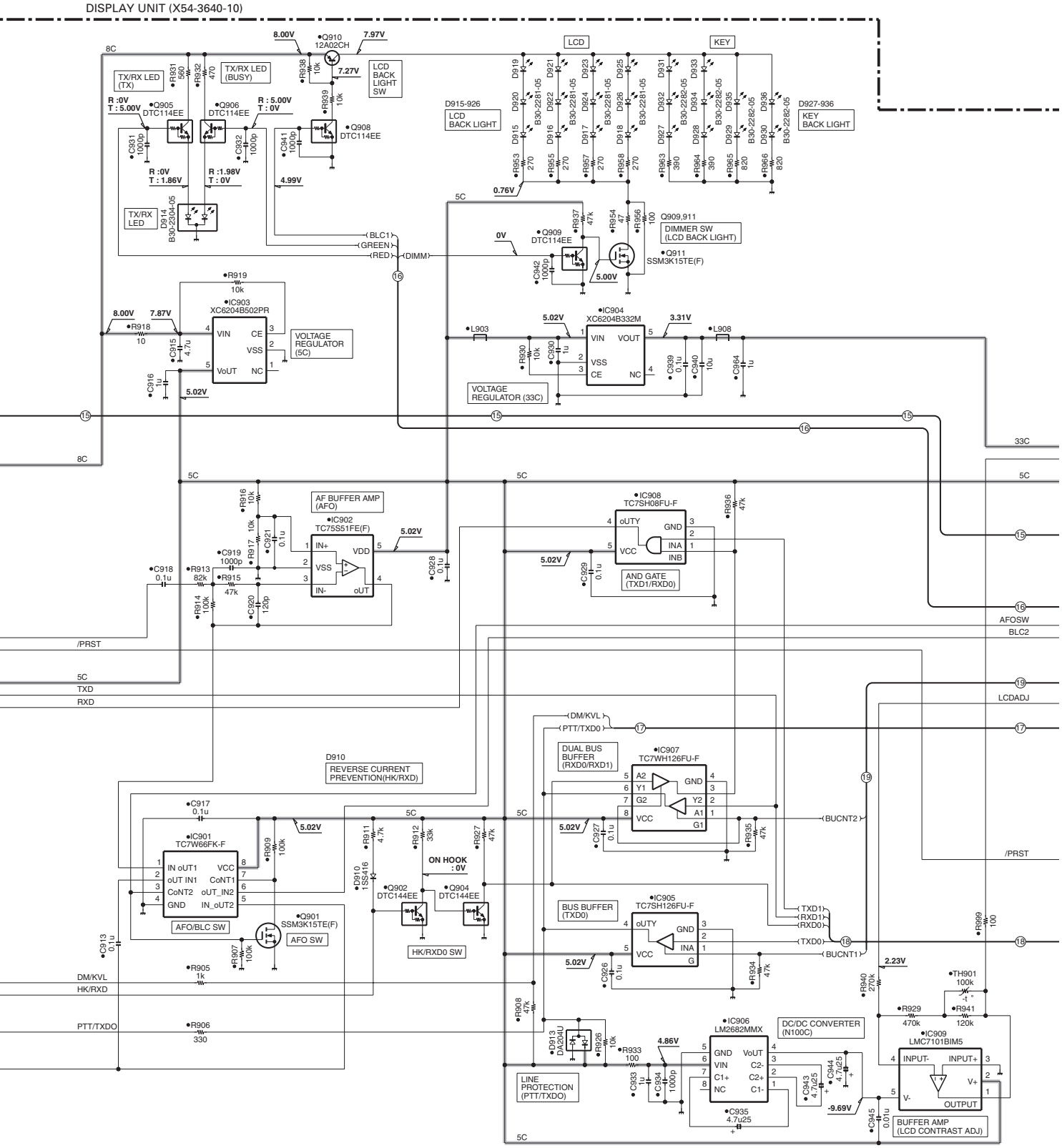

SCHEMATIC DIAGRAM NX-800

Note : The components marked with a dot (●) are parts of layer 1.

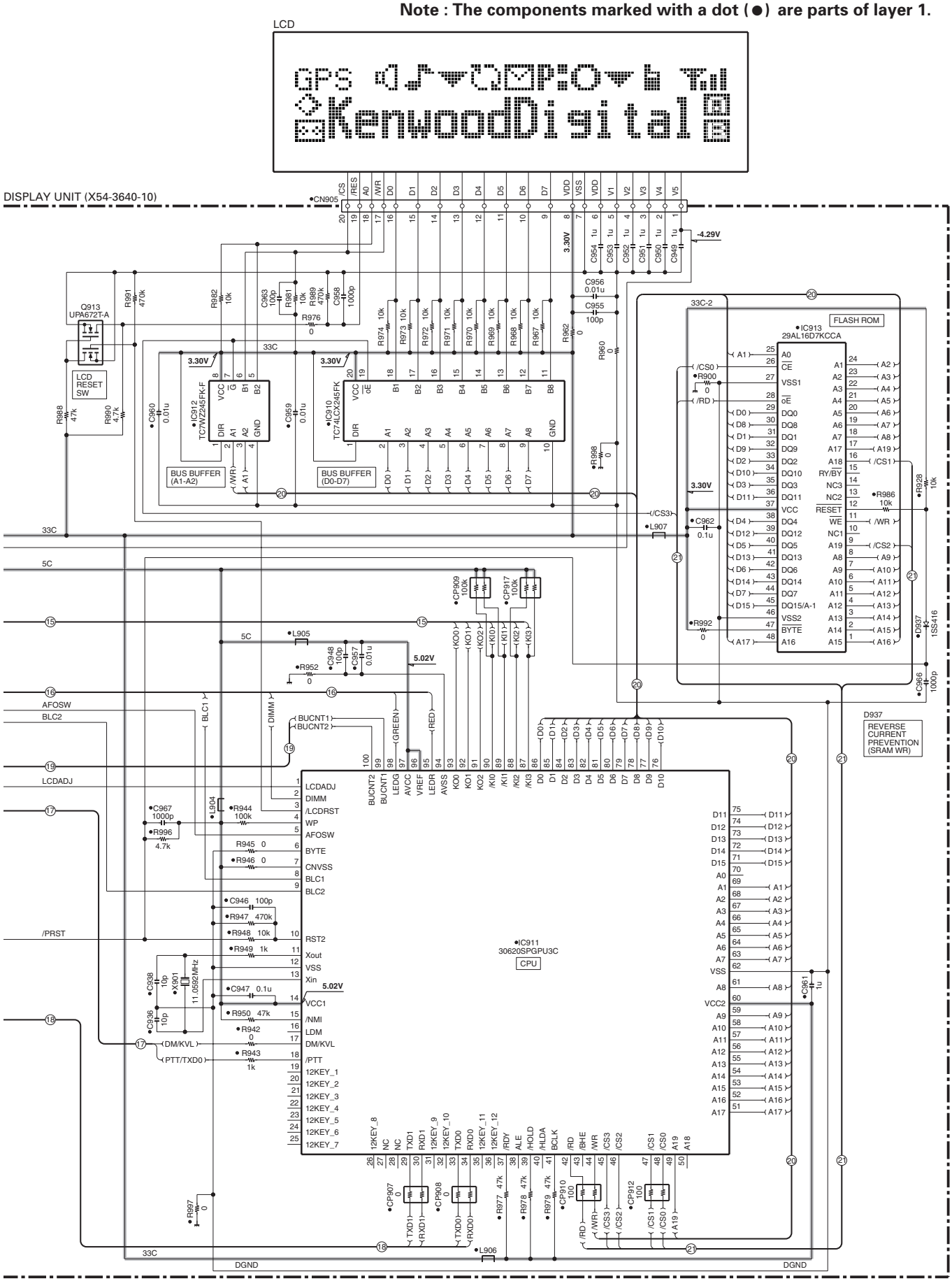

INTERCONNECTION DIAGRAM

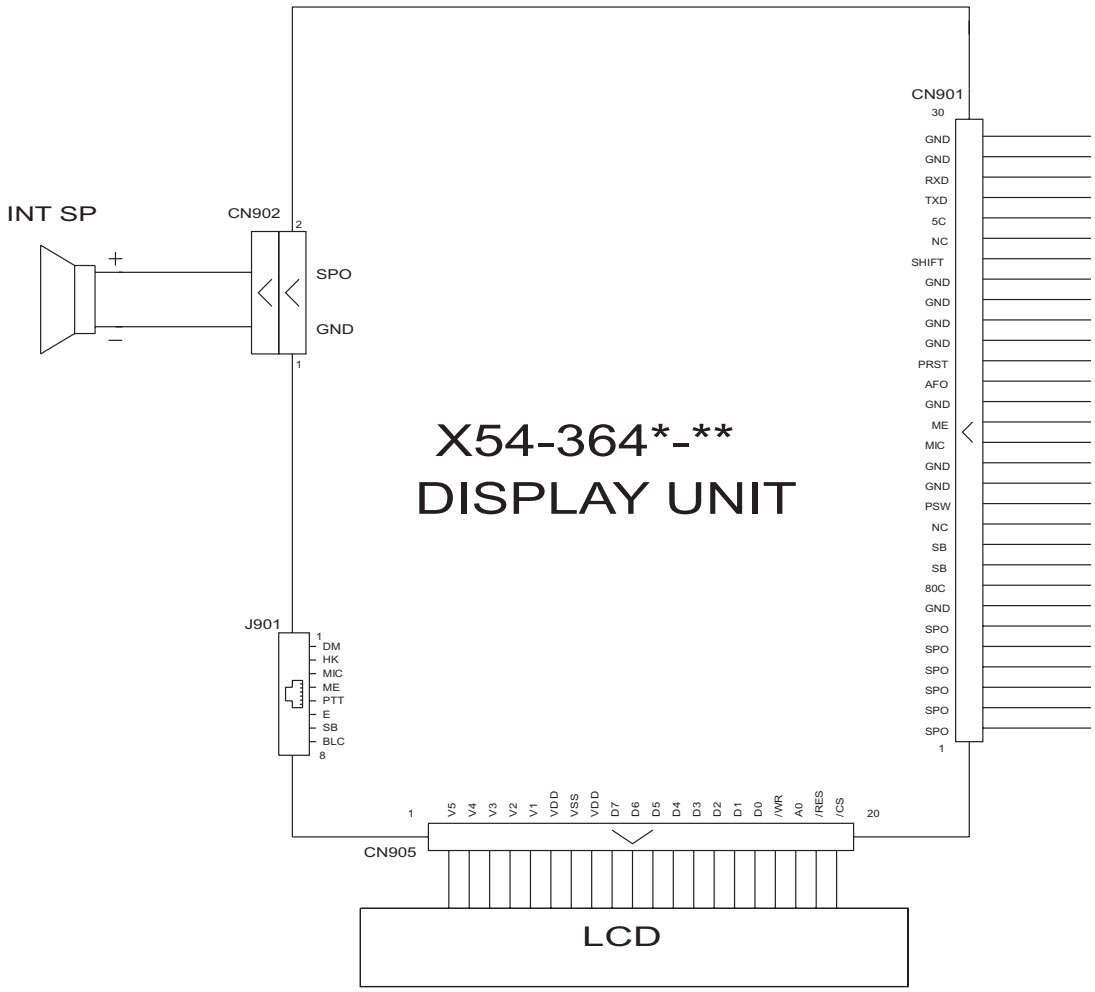

INTERCONNECTION DIAGRAM

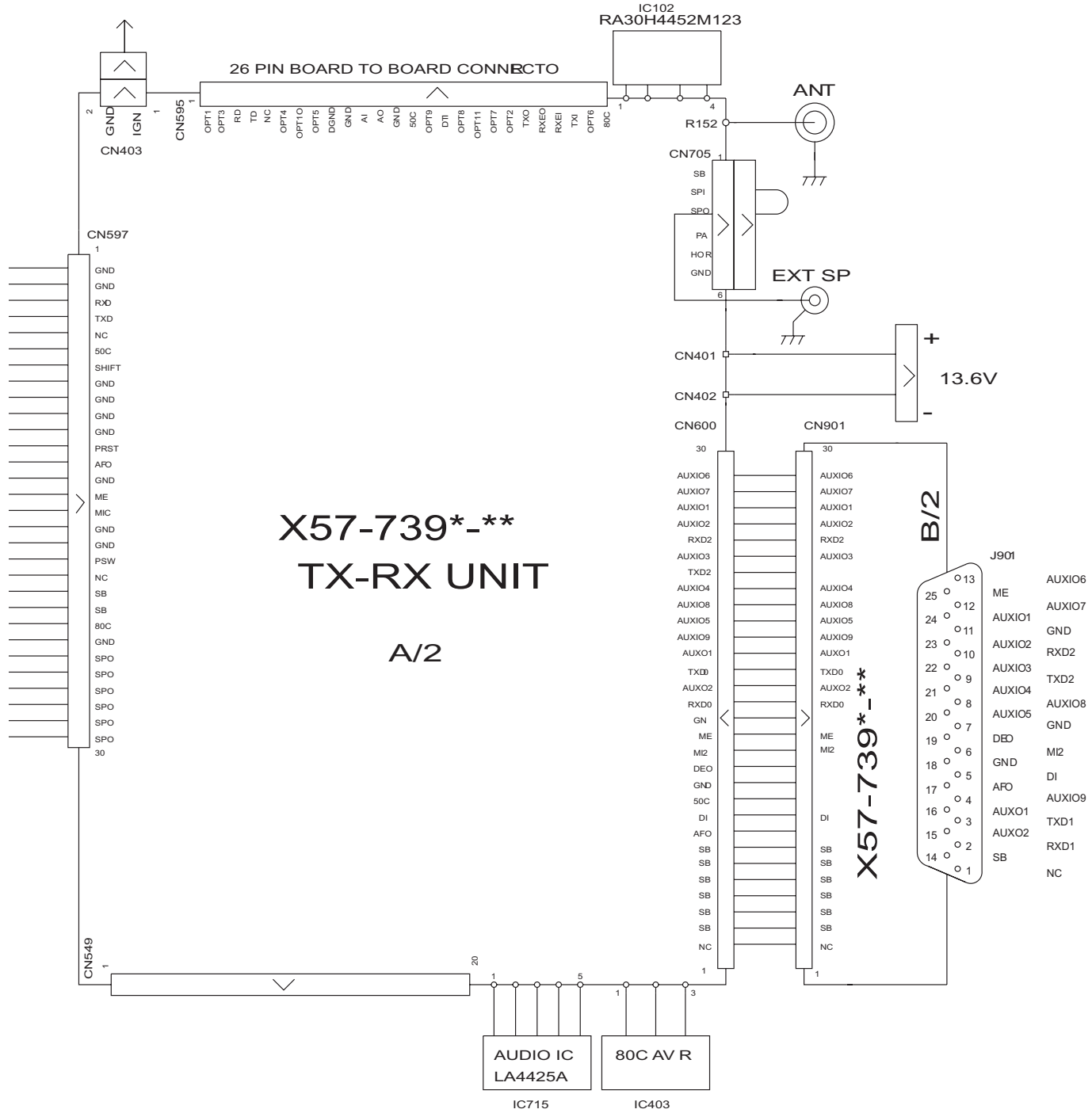

BLOCK DIAGRAM

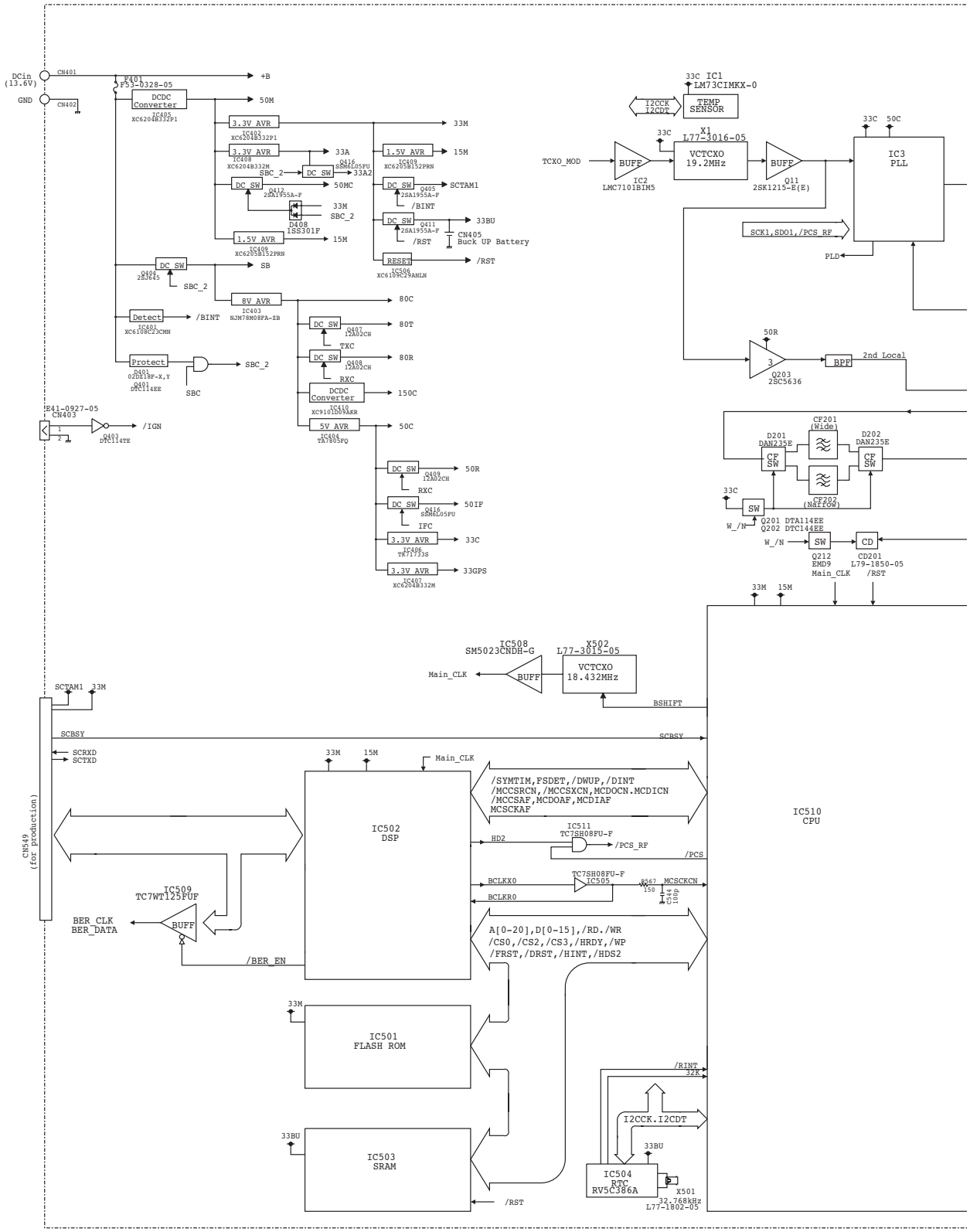

BLOCK DIAGRAM

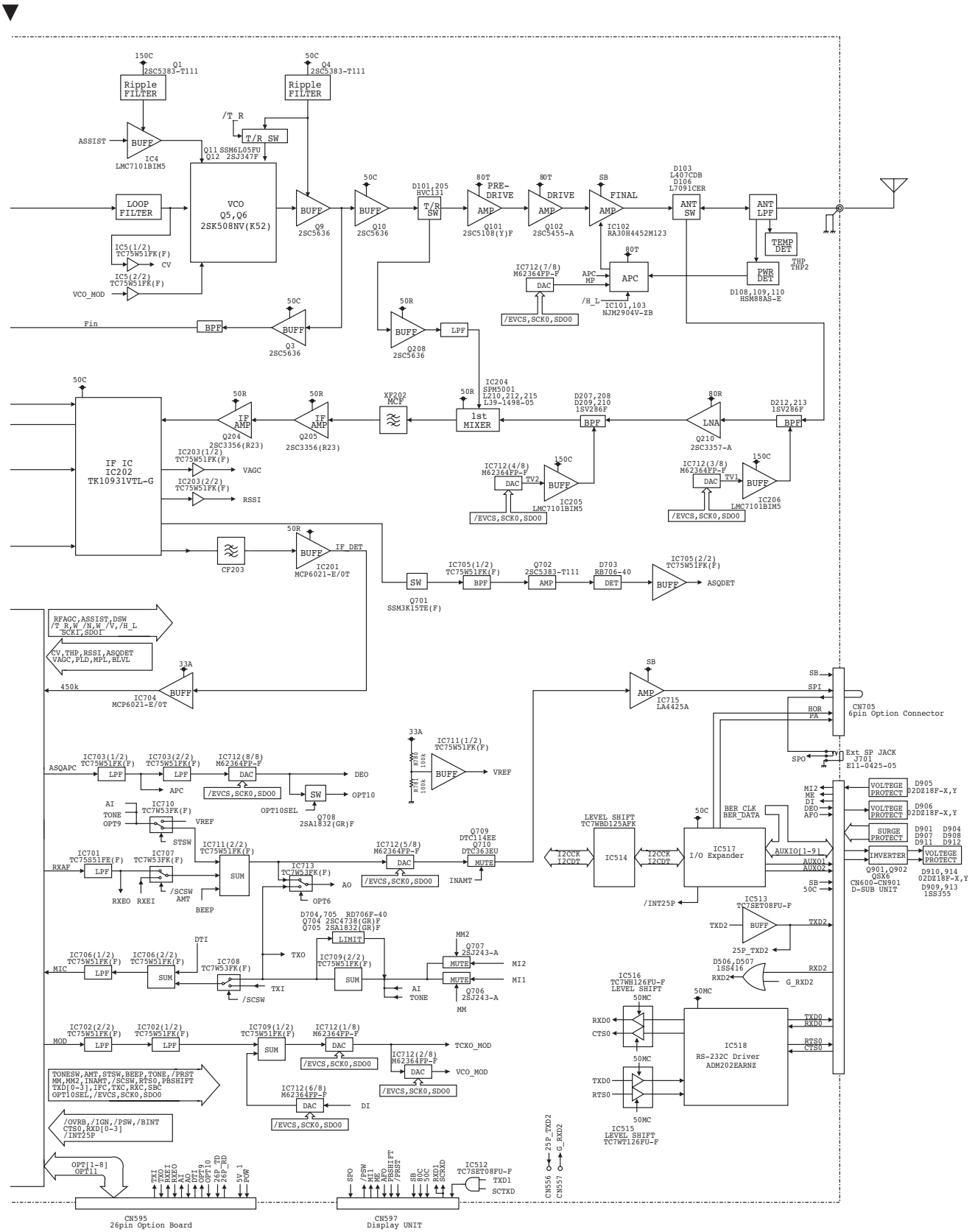

LEVEL DIAGRAM

Receiver Section

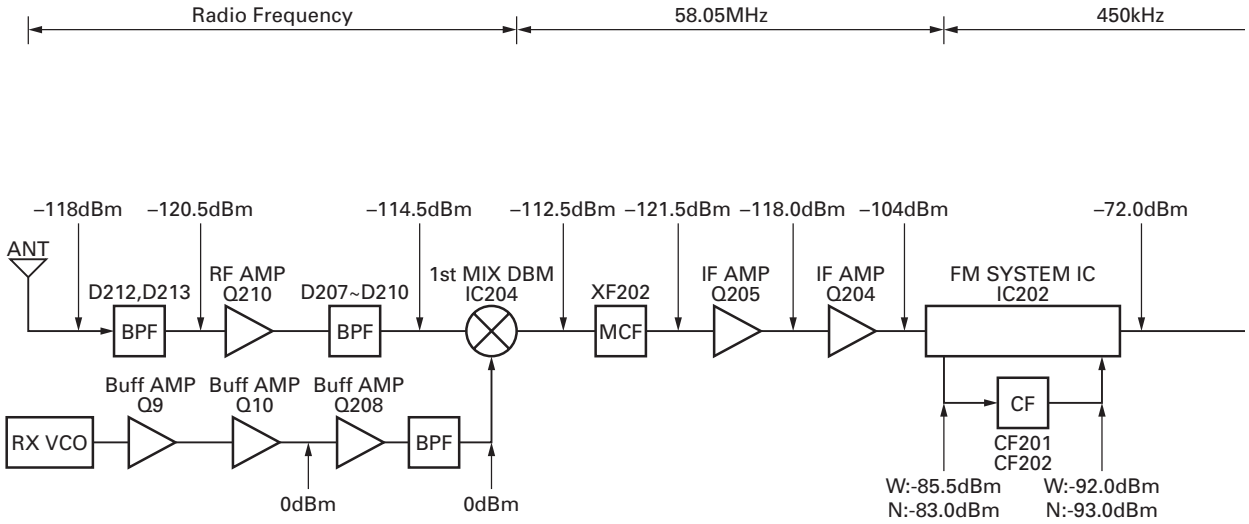

SG input level for 12dB SINAD are obtained Measured by connecting SG to each point via a 0.01μF capacitor.

Transmitter Section

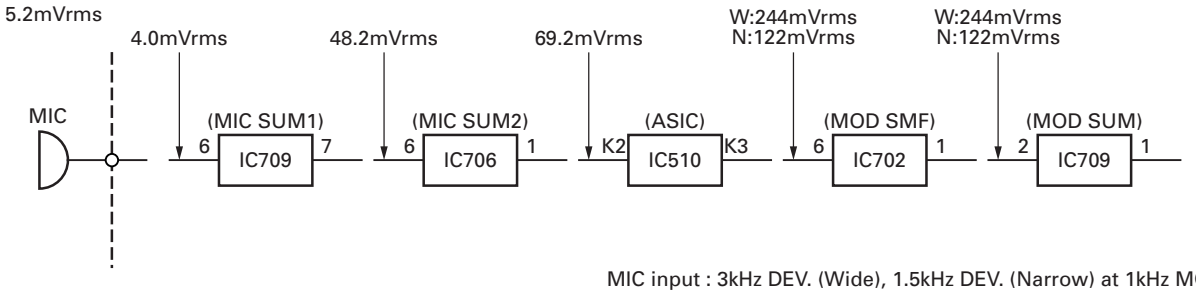

MIC input : 3kHz DEV. (Wide), 1.5kHz DEV. (Narrow) at 1kHz MOD.
Transmitting frequency : Center frequency

LEVEL DIAGRAM

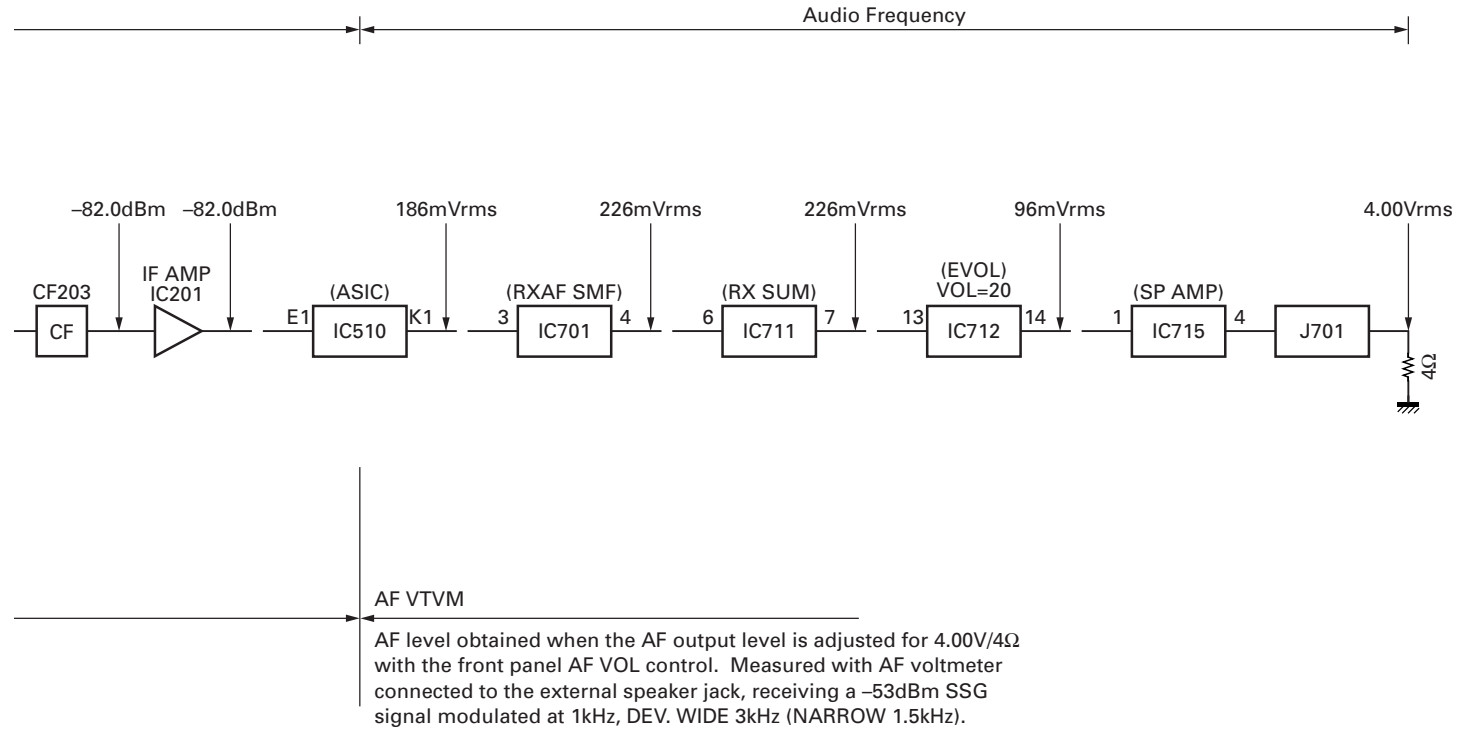

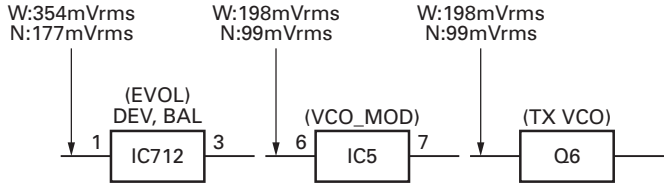

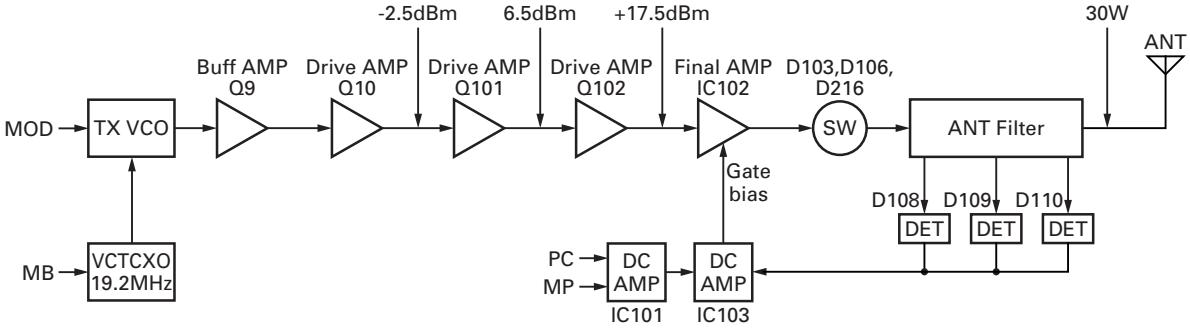

NX-800

SPECIFICATIONS

GENERAL

Frequency Range ..... 450~520MHz
Number of Channels 512
Zones 128
Max. Channels per Zone 250
Channel Spacing..... Analog : 12.5/25 kHz Digital : 6.25/12.5 kHz
Operating Voltage ..... 10.8~15.7V
Operating Temperature Range..... –22°F~+140°F (–30°C~+60°C)
Frequency Stability ..... ±1.0ppm
Antenna Impedance 50Ω
Dimensions (W x H x D) ..... 6.30″ x 1.77″ x 6.18″ in. (160 x 45 x 157 mm)
(Projections not included)
Weight..... 3.03 lbs. (1.38 kg)

RECEIVER

Sensitivity ..... Digital @6.25kHz (3% BER) : 0.20μV Digital @12.5kHz (3% BER) : 0.28μV
Analog 12dB SINAD : 0.25μV
Selectivity ..... Analog @25kHz : -80dB Analog @12.5kHz : -70dB
Intermodulation Distortion ..... Analog @25kHz : -75dB Analog @12.5kHz : -75dB
Spurious Response ..... Analog :- 85dB
Audio Distortion ..... Less than 3%
Audio Output 4W

TRANSMITTER

RF Power Output ..... 1~30W
Spurious Response 75dB
FM Hum and Noise (Typ) ..... Analog @25kHz : 50dB Analog @12.5kHz : 45dB
Modulation 16K0F3E, 14K4F1D, 11K0F3E, 8K30F1E, 8K10F1E, 8K10F1D, 8K30F1D, 8K30F7W, 4K00F1E, 4K00F1D, 4K00F7W, 4K00F2D

Analog measurements made per TIA/EIA 603
KENWOOD reserves the right to change specifications without prior notice or obligation.

Kenwood Corporation

2967-3, Ishikawa-machi, Hachioji-shi, Tokyo, 192-8525 Japan

Kenwood U.S.A. Corporation
P.O. BOX 22745, 2201 East Dominguez Street, Long Beach, CA 90801-5745, U.S.A.

Kenwood Electronics Canada Inc.
6070 Kestrel Road, Mississauga, Ontario, Canada L5T 1S8

Kenwood Electronics Deutschland GmbH
Rembrücker Str. 15, 63150 Heusenstamm, Germany

Kenwood Electronics Belgium N.V.
Leuvensesteenweg 248 J, 1800 Vilvoorde, Belgium

Kenwood Electronics France S.A.
L'Etoile Paris Nord 2, 50 Allée des Impressionnistes, Bp 58416 Villepinte, 95944 Roissy Ch De Gaulle Cedex

Kenwood Electronics UK Limited
KENWOOD House, Dwight Road, Watford, Herts., WD18 9EB United Kingdom

Kenwood Electronics Europe B.V.
Amsterdamseweg 37, 1422 AC Uithoorn, The Netherlands

Kenwood Electronics Italia S.p.A.
Via G. Sirtori, 7/9 20129 Milano, Italy

Kenwood Ibérica, S.A.
Bolivia, 239-08020 Barcelona, Spain

Kenwood Electronics Australia Pty. Ltd.
(A.C.N. 001 499 074)
16 Giffnock Avenue, Centrecourt Estate, North Ryde, N.S.W. 2113 Australia

Kenwood Electronics (Hong Kong) Ltd.
Unit 3712-3724, Level 37, Tower one Metroplaza, 223 Hing Fong Road, Kwai Fong, N.T., Hong Kong

Kenwood Electronics Singapore Pte Ltd
1 Ang Mo Kio Street 63, Singapore 569110

100%

TX-RX UNIT (X57-7390-10) (B/2) Component side view (J79-0130-19 B/2)

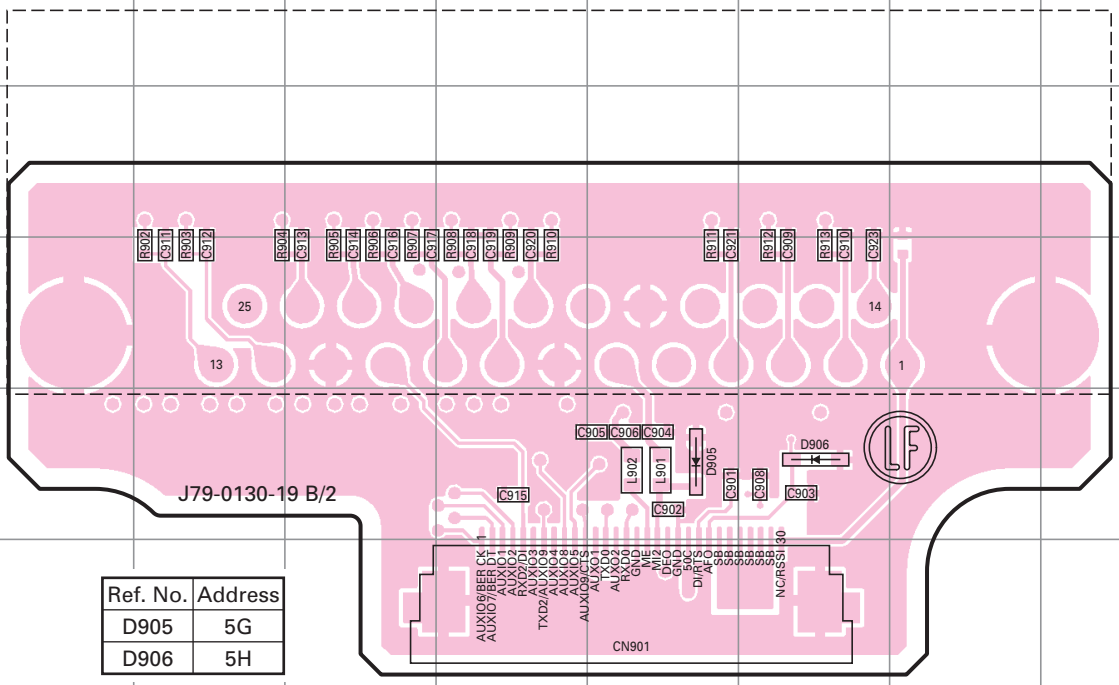

Component side
Layer 1
Layer 2
Layer 3
Layer 4
Layer 5
Layer 6
Foil side

Ref. No.	Address
D905	5G
D906	5H

TX-RX UNIT (X57-7390-10) (B/2) Foil side view (J79-0130-19 B/2)

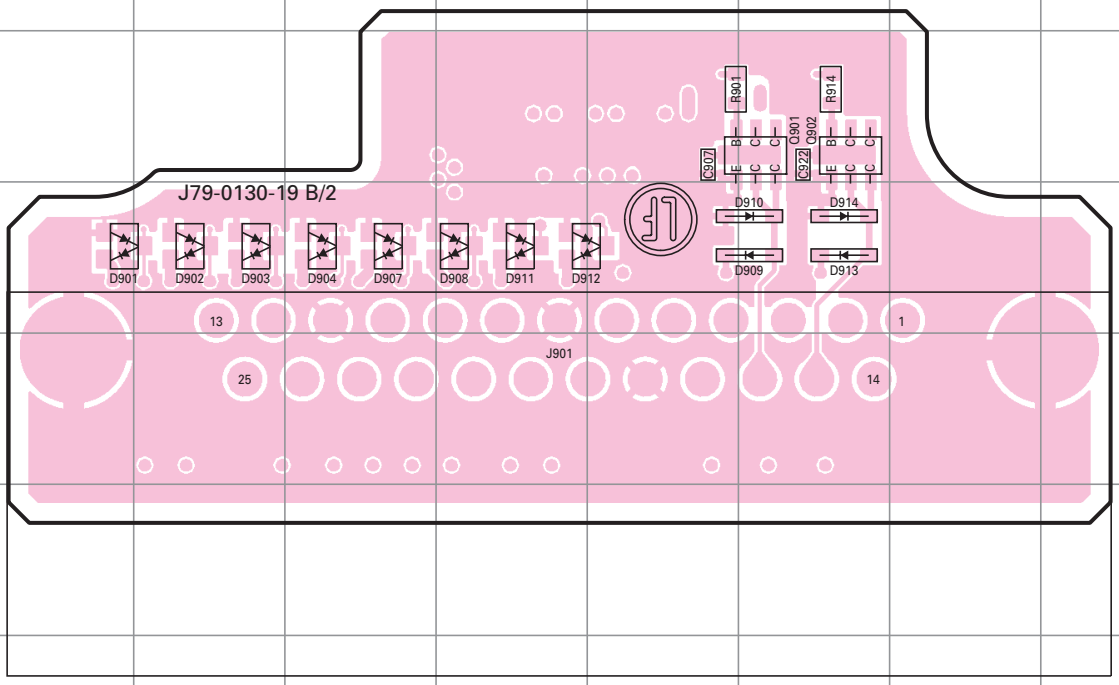

Component side
Layer 1
Layer 2
Layer 3
Layer 4
Layer 5
Layer 6
Foil side

Ref. No.	Address	Ref. No.	Address	Ref. No.	Address
Q901	8H	D904	9E	D911	9F
Q902	8H	D907	9E	D912	9F
D901	9C	D908	9F	D913	9H
D902	9D	D909	9H	D914	9H
D903	9D	D910	9H		

PC BOARD NX-800

TX-RX UNIT (X57-7390-10) (A/2)
Component side view (J79-0130-19 A/2)

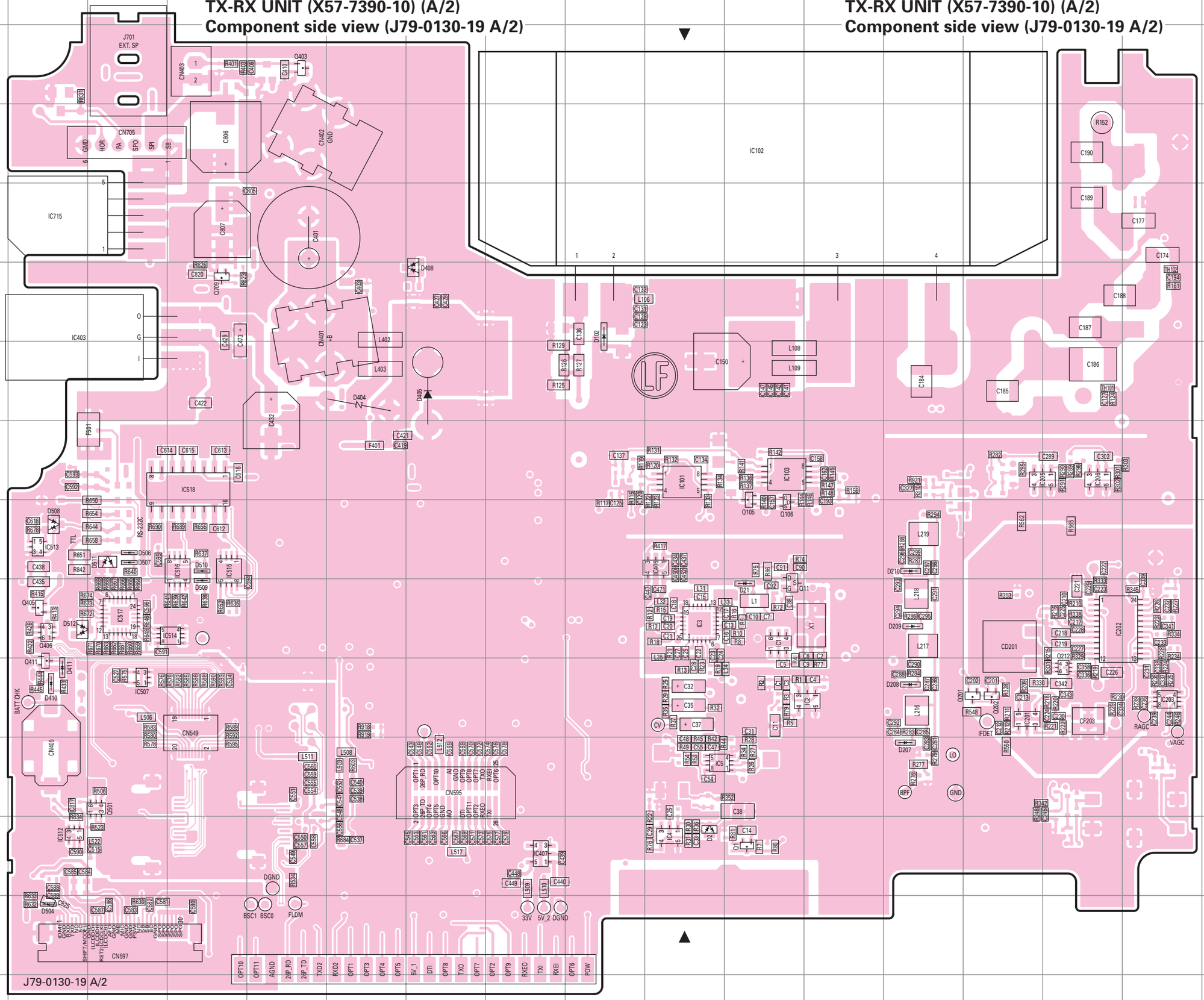

Ref. No.	Address	Ref. No.	Address
IC1	9K	Q201	10N
IC2	10L	Q202	10N
IC3	9J	Q212	10O
IC4	12J	Q403	2E
IC5	11J	Q405	9B
IC101	7J	Q406	9B
IC102	3K	Q411	10B
IC103	7K	Q501	11C
IC201	10N	Q709	5D
IC202	9O	D2	12J
IC203	10P	D21	9K
IC205	7N	D102	5I
IC206	7O	D207	11M
IC403	5B	D208	10M
IC406	8J	D209	9M
IC407	12H	D210	8M
IC507	10C	D404	6F
IC512	12B	D405	6G
IC513	8B	D408	5G
IC514	9D	D410	10B
IC515	8D	D411	10B
IC516	8D	D504	13B
IC517	9C	D506	8C
IC518	7D	D507	8C
IC715	4B	D508	8B
Q1	12K	D509	9D
Q11	9K	D510	8D
Q105	8K	D511	8C
Q106	8K	D512	9B

Component side
Layer 1
Layer 2
Layer 3
Layer 4
Layer 5
Layer 6
Foil side

J79-0130-19 A/2

PC BOARD NX-800

TX-RX UNIT (X57-7390-10) (A/2)
Foil side view (J79-0130-19 A/2)

TX-RX UNIT (X57-7390-10) (A/2)
Foil side view (J79-0130-19 A/2)

Ref. No.	Address	Ref. No.	Address	Ref. No.	Address
IC204	11F	Q6	10J	D4	11J
IC401	7M	Q7	10K	D7	11H
IC402	6N	Q8	10J	D8	11J
IC404	6P	Q9	10I	D9	11H
IC405	5N	Q10	10I	D10	11I
IC408	5M	Q101	7I	D11	11J
IC409	7N	Q102	7J	D12	11I
IC410	12J	Q203	8E	D14	11J
IC501	12P	Q204	9D	D101	9H
IC502	10Q	Q205	10D	D103	5F
IC503	12Q	Q208	10G	D106	6E
IC504	10N	Q210	7G	D108	6D
IC505	10P	Q401	3P	D109	5D
IC506	13P	Q402	4P	D110	4D
IC508	10O	Q404	4P	D201	10E
IC509	9P	Q407	5P	D202	10F
IC510	12O	Q408	5P	D205	9H
IC511	9O	Q409	7O	D212	7E
IC701	12M	Q410	7N	D213	7E
IC702	8N	Q412	6N	D216	7D
IC703	12L	Q413	5P	D401	3O
IC704	10M	Q414	5P	D403	4P
IC705	12L	Q415	7O	D406	3P
IC706	8M	Q416	5N	D407	4N
IC707	12M	Q417	12I	D409	4N
IC708	8N	Q701	12K	D412	5N
IC709	8O	Q702	11L	D501	13O
IC710	11M	Q703	12M	D502	13O
IC711	11L	Q704	7P	D503	9O
IC712	9L	Q705	8P	D702	11L
IC713	11K	Q706	8R	D703	11L
IC714	11L	Q707	8R	D704	7O
Q3	9I	Q708	10L	D705	8O
Q4	9J	Q710	5Q	D706	9L
Q5	10I	D3	11I	D707	9M

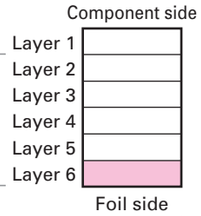

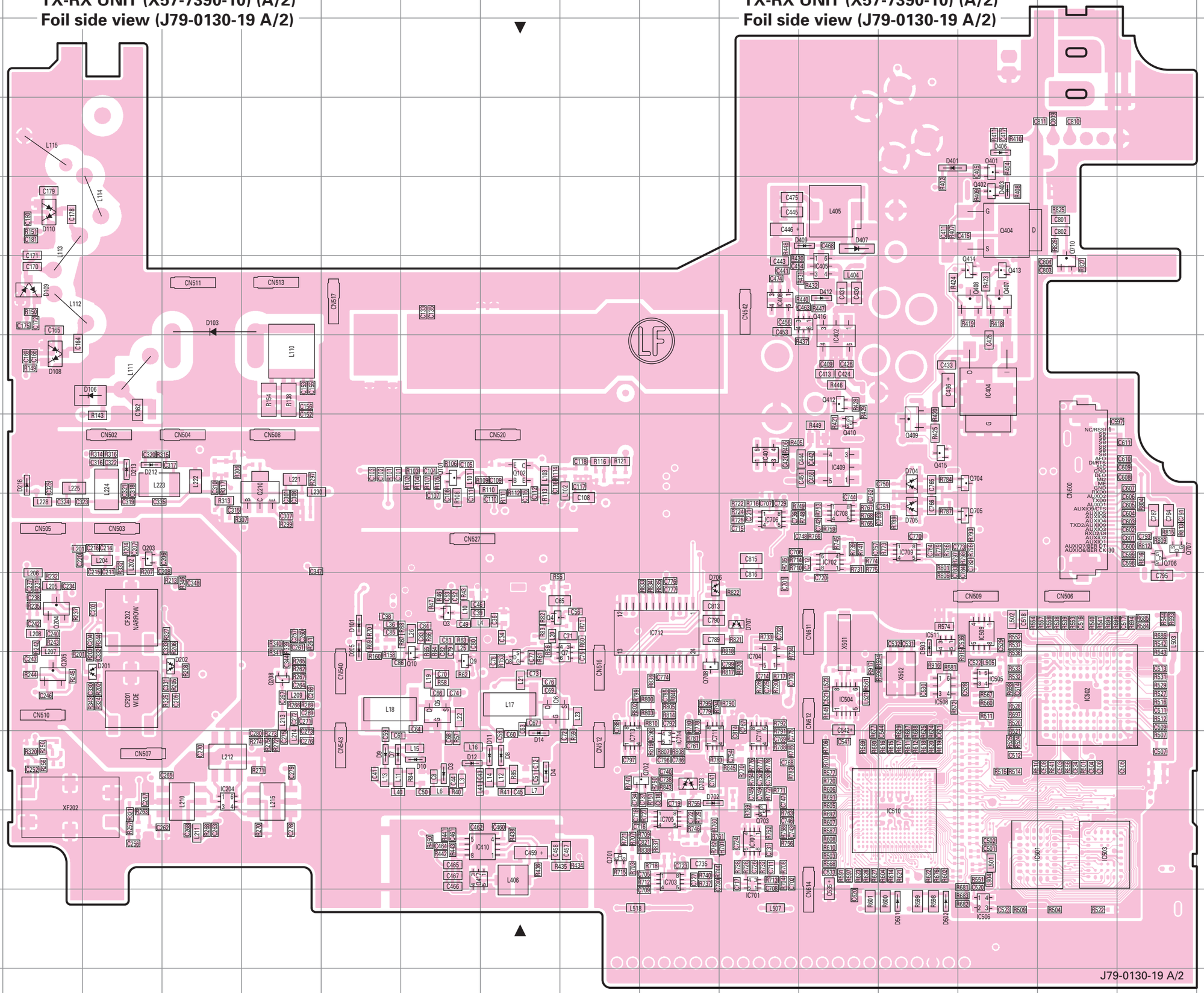

PC BOARD NX-800

DISPLAY UNIT (X54-3640-10) Component side view (J79-0157-19)

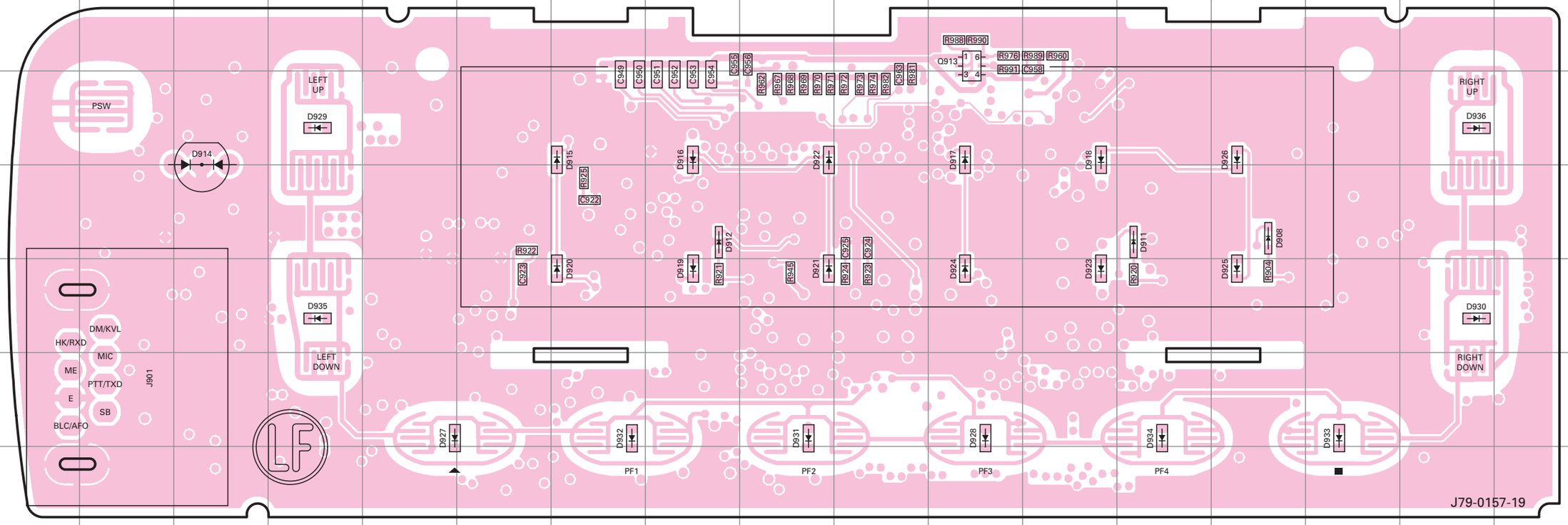

DISPLAY UNIT (X54-3640-10) Component side view (J79-0157-19)

Ref. No.	Address	Ref. No.	Address
Q913	2K	D924	5K
D908	4N	D925	5N
D911	4M	D926	3M
D912	4H	D927	6E
D914	3C	D928	6K
D915	3G	D929	3D
D916	3H	D930	5P
D917	3K	D931	6I
D918	3L	D932	6G
D919	5H	D933	6O
D920	5G	D934	6M
D921	5I	D935	5D
D922	3I	D936	3P
D923	5L		

Component side
Layer 1
Layer 2
Layer 3
Layer 4
Foil side

DISPLAY UNIT (X54-3640-10) Foil side view (J79-0157-19)

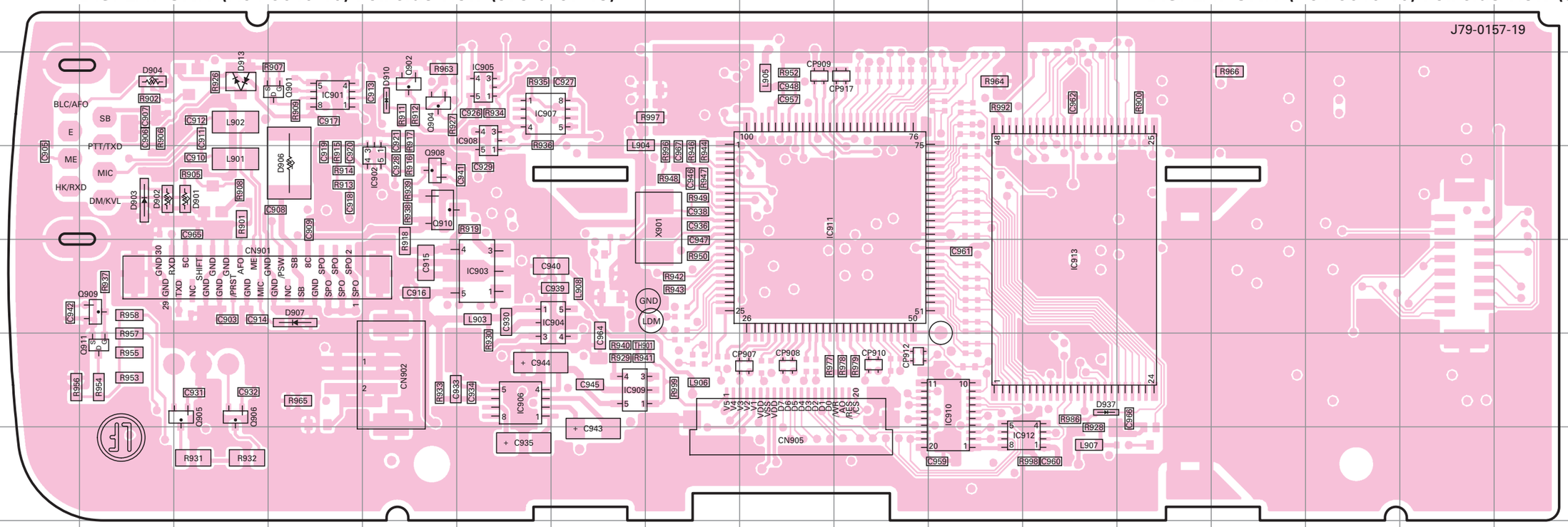

DISPLAY UNIT (X54-3640-10) Foil side view (J79-0157-19)

Ref. No.	Address	Ref. No.	Address
IC901	9D	Q905	12C
IC902	10E	Q906	12C
IC903	11F	Q908	10E
IC904	11G	Q909	11B
IC905	9F	Q910	10E
IC906	12F	Q911	12B
IC907	9F	D901	10C
IC908	9F	D902	10B
IC909	12G	D903	10B
IC910	12K	D904	9B
IC911	10I	D906	10D
IC912	13L	D907	11D
IC913	11L	D910	9E
Q901	9D	D913	9C
Q902	9E	D937	12L
Q904	9E		

Component side
Layer 1
Layer 2
Layer 3
Layer 4
Foil side

NX-800 SCHEMATIC DIAGRAM

Note : The components marked with a dot lie on pcb of type 1.

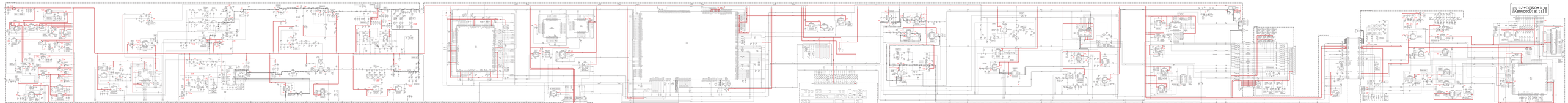

INTERCONNECTION DIAGRAM

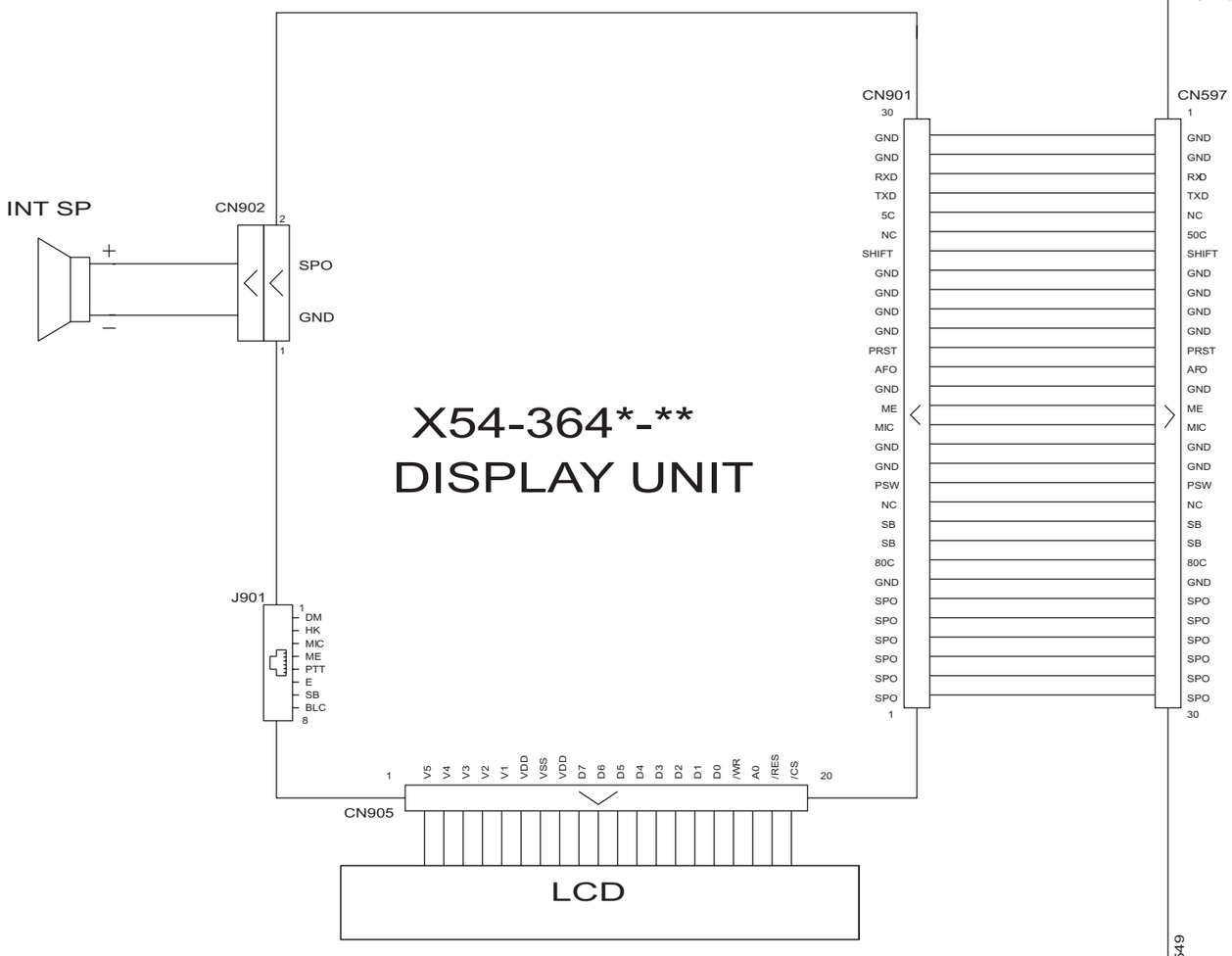

INTERCONNECTION DIAGRAM

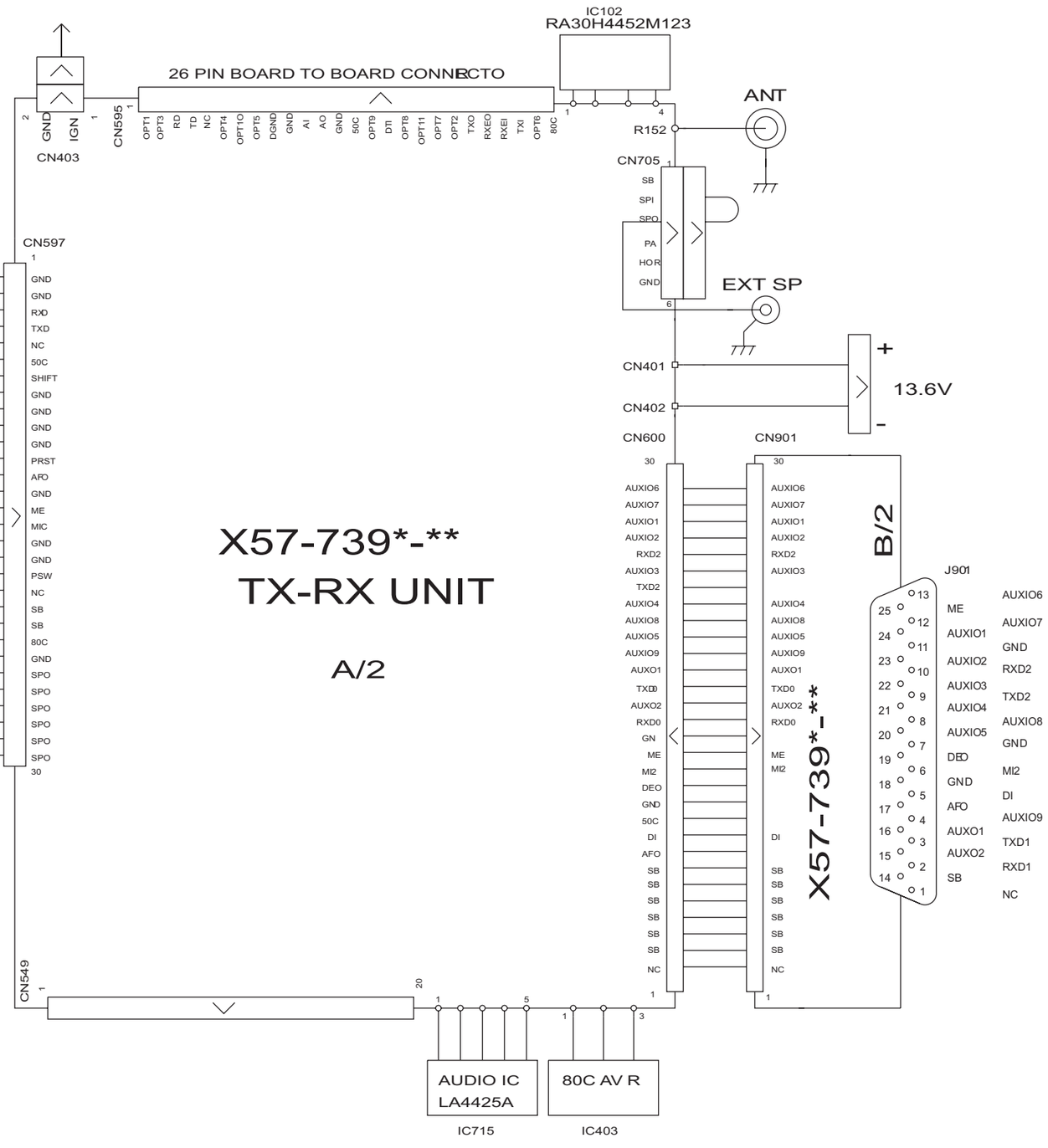

BLOCK DIAGRAM

NX-800

BLOCK DIAGRAM

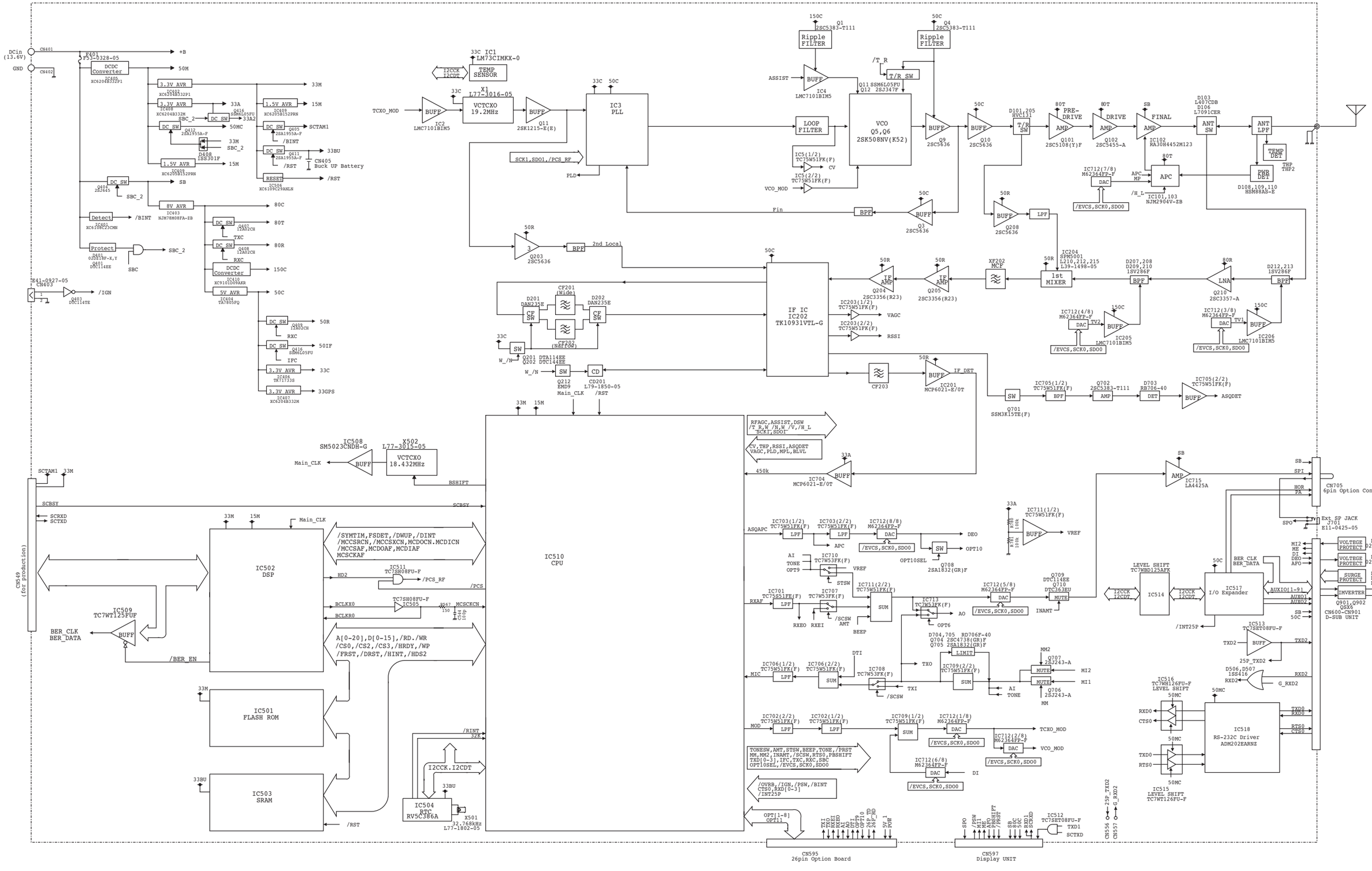

LEVEL DIAGRAM

NX-800

LEVEL DIAGRAM

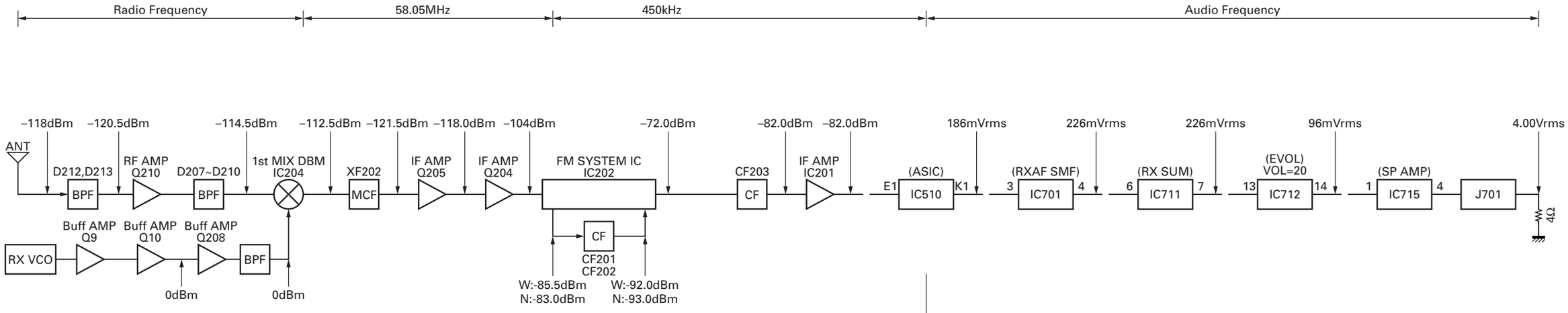

SG input level for 12dB SINAD are obtained Measured by connecting SG to each point via a 0.01μF capacitor.

AF VTVM

AF level obtained when the AF output level is adjusted for 4.00V/4Ω with the front panel AF VOL control. Measured with AF voltmeter connected to the external speaker jack, receiving a –53dBm SSG signal modulated at 1kHz, DEV. WIDE 3kHz (NARROW 1.5kHz).

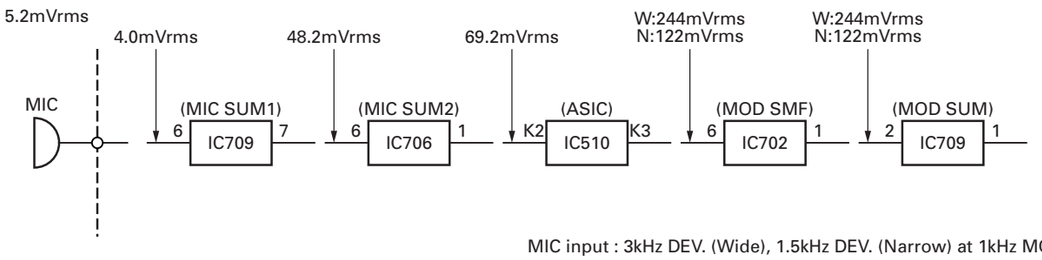

MIC input : 3kHz DEV. (Wide), 1.5kHz DEV. (Narrow) at 1kHz MOD.
Transmitting frequency : Center frequency

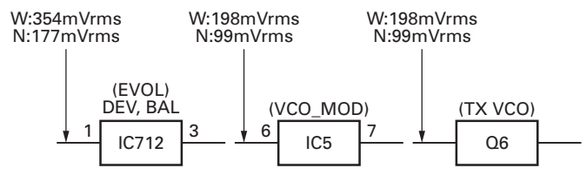

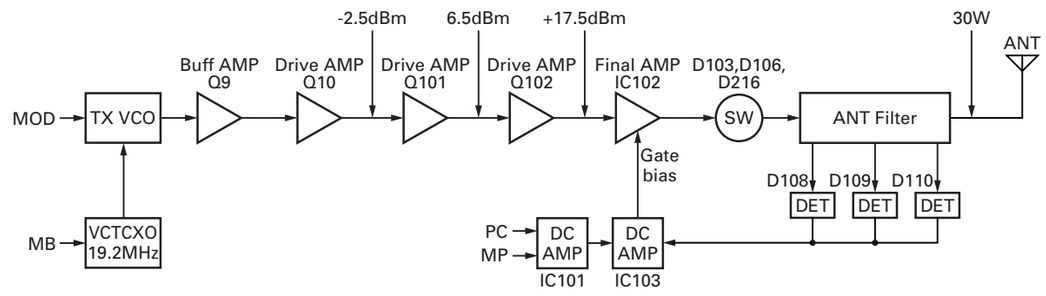

Free Manuals Download Website

http://myh66.com

http://usermanuals.us

http://www.somanuals.com

http://www.4manuals.cc

http://www.manual-lib.com

http://www.404manual.com

http://www.luxmanual.com

http://aubethermostatmanual.com

Golf course search by state

http://golfingnear.com

Email search by domain

http://emailbydomain.com

Auto manuals search

http://auto.somanuals.com

TV manuals search

http://tv.somanuals.com