DOOR/REAR DECK SPEAKER

KFC-HQR10

SERVICE MANUAL

KENWOOD

©1996-1 PRINTED IN JAPAN
B51-6959-00 (MC) 1342

EXTERNAL VIEW

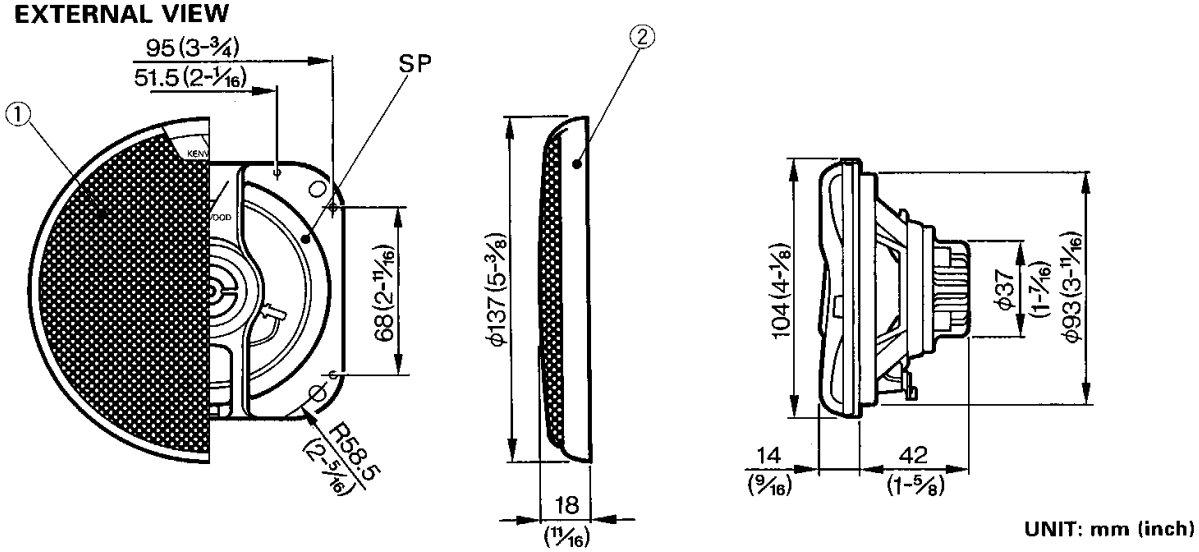

UNIT: mm (inch)

PARTS INCLUDED

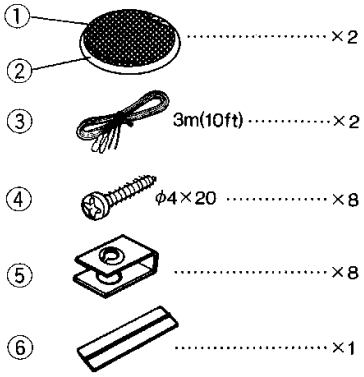

PARTS LIST

★New Parts
Parts without **Parts No.** are not supplied.
Les articles non mentionnés dans le **Parts No.** ne sont pas fournis.
Teile ohne **Parts No.** werden nicht geliefert.

Ref No.	New Parts	Parts No.	Description
①	★	F09-1133-08	Protector
②	★	B06-0988-08	Grille
③	★	E30-5293-08	Speaker cord
④, ⑤		N99-1242-08	Screw set
⑥		J69-0111-08	Adhesive tape
SP	★	T15-0303-08	Speaker

SPECIFICATIONS

Speakers
- Woofer — 104mm (4in) Injection P.P. Cone Type
  8g×2 (0.29oz×2) Neodymium Magnet
- Tweeter — 25mm (1in) P.P.T.A. Balanced Dome Type

Peak Power — 70 Watts
Frequency Response — 45Hz~30,000Hz
Sensitivity — 90dB/W at 1m
Impedance — 4 Ohms
Net Weight With Grille — 460g (1.0lb)/Pair

Note:
KENWOOD follows a policy continuos advancements in development. For this reason specifications may be changed without notice.

Download from Www.Somanuals.com. All Manuals Search And Download.

Free Manuals Download Website

http://myh66.com

http://usermanuals.us

http://www.somanuals.com

http://www.4manuals.cc

http://www.manual-lib.com

http://www.404manual.com

http://www.luxmanual.com

http://aubethermostatmanual.com

Golf course search by state

http://golfingnear.com

Email search by domain

http://emailbydomain.com

Auto manuals search

http://auto.somanuals.com

TV manuals search

http://tv.somanuals.com