KeysFitness®

Keys9000

Owner's Manual

Keys 9000LI
Keys 9000OB

Customer Service
(888) 340-0482

Keys Fitness Products
4009 Distribution Drive
Suite 250
Garland, TX 75041

www.keysfitness.com

CAUTION! Read all precautions and instructions in this manual before using this equipment.

Model Name : KEYS9000LI

Serial Number :

Write down for future reference

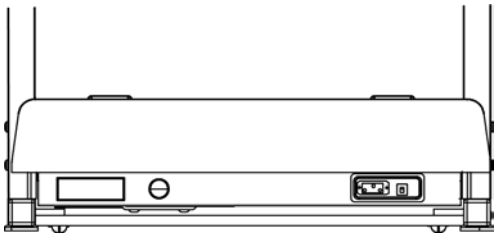

PN 15-0170
05/05 Rev A

Download from Www.Somanuals.com. All Manuals Search And Download.

Table of Contents

Important Safety Information	3
Before You Start	4
Assembly	5-7
Power Requirements	8
Console Panel Functions	9-10
Program Operation	11-15
Heart Rate Mode	16-21
Monitoring Your Heart Rate	22-23
Warm-Up Exercises	24
Changing to MPH or KM	25
Calibration Sequence	26
Belt Adjustment	27
Maintenance Instructions	28
Error Messages	29
Troubleshooting	30
Exploded View	31
Parts List	32
Warranty Information	33

Download from Www.Somanuals.com. All Manuals Search And Download.

Important Safety Information

WARNING! Before using this treadmill or starting any exercise program, consult your physician. This is especially important for persons over the age of 35 and/or persons with pre-existing health problems. The manufacturer or distributor assumes no responsibility for personal injury or property damage sustained by or through the use of this product.

WARNING! To reduce the risk of electrical shock, burns, fire, or other possible injuries to the user it is important to review this manual and the following precautions **before** operation.

SAFETY PRECAUTIONS AND TIPS

1. It is the owner's responsibility to ensure that all users of this treadmill have read the Owner's Manual and are familiar with warnings and safety precautions.
2. This treadmill has a user maximum capacity of **400** pounds.
3. The treadmill should only be used on a level surface and is intended for indoor use only. The treadmill should not be placed in a garage, patio, or near water and should never be used while you are wet. Keys Fitness recommends a treadmill mat be placed under the treadmill to protect floor or carpet and for easier cleaning.
4. Follow safety information in regards to plugging in your treadmill. Keep the power cord away from the incline wheels and do not run the power cord underneath your treadmill. Do not operate the treadmill with a damaged or frayed power cord.
5. Wear comfortable, good-quality walking or running shoes and appropriate clothing. Do not use the treadmill with bare feet, sandals, socks or stockings.
6. Always straddle the belt and allow it to start moving before stepping onto the belt.
7. Hold on to handrail when adjusting speed, incline, or other controls.
8. Always examine your treadmill before use to ensure all parts are in working order.
9. Allow the belt to fully stop before dismounting.
10. Pets should never be allowed near or on the treadmill.
11. Do not leave children unsupervised near or on the treadmill.
12. Never operate the treadmill where oxygen is being administered, or where aerosol products are being used.
13. Never insert any object or body parts into any opening.
14. For safety and to prevent damage to your treadmill, no more than one person should use the treadmill at a time.
15. Always unplug the treadmill before cleaning and/or servicing. Service to your treadmill should only be performed by an authorized service representative, unless authorized and/or instructed by the manufacturer.
16. Failure to follow these instructions will void the treadmill warranty.
17. Never leave the treadmill unattended while it is running.

Download from Www.Somanuals.com. All Manuals Search And Download.

Before You Start

Thank you for purchasing the **Keys 9000LI** or **Keys 9000 OB Treadmill!** This quality product you have chosen was designed to meet your needs for cardiovascular exercise. Before you start, please read the Owner's Manual and become familiar with the operation of your new treadmill.

Remember to take the time to perform the stretching exercises provided to avoid injury.

Do not stand on the walking belt while pressing the Power button or Start/Stop button.

Always adjust the speed of the treadmill in small increments as this treadmill is capable of high speeds.

If you are taking medication, consult your physician to see if the medication will affect your exercise heart rate.

If you have heart problems, you are not active, and/or are over the age of 35 years, do not use the pre-set treadmill programs or start an exercise program without first contacting and receiving approval from your physician.

To avoid the risk of electrical shock, always keep the console dry. Do not spill liquids on the console. Keys Fitness recommends a sealed water bottle for beverages consumed while using the treadmill.

Please review the drawing below (Figure 1) to familiarize yourself with the listed parts. This manual covers several treadmills, so the one pictured below may not be identical to your particular model.

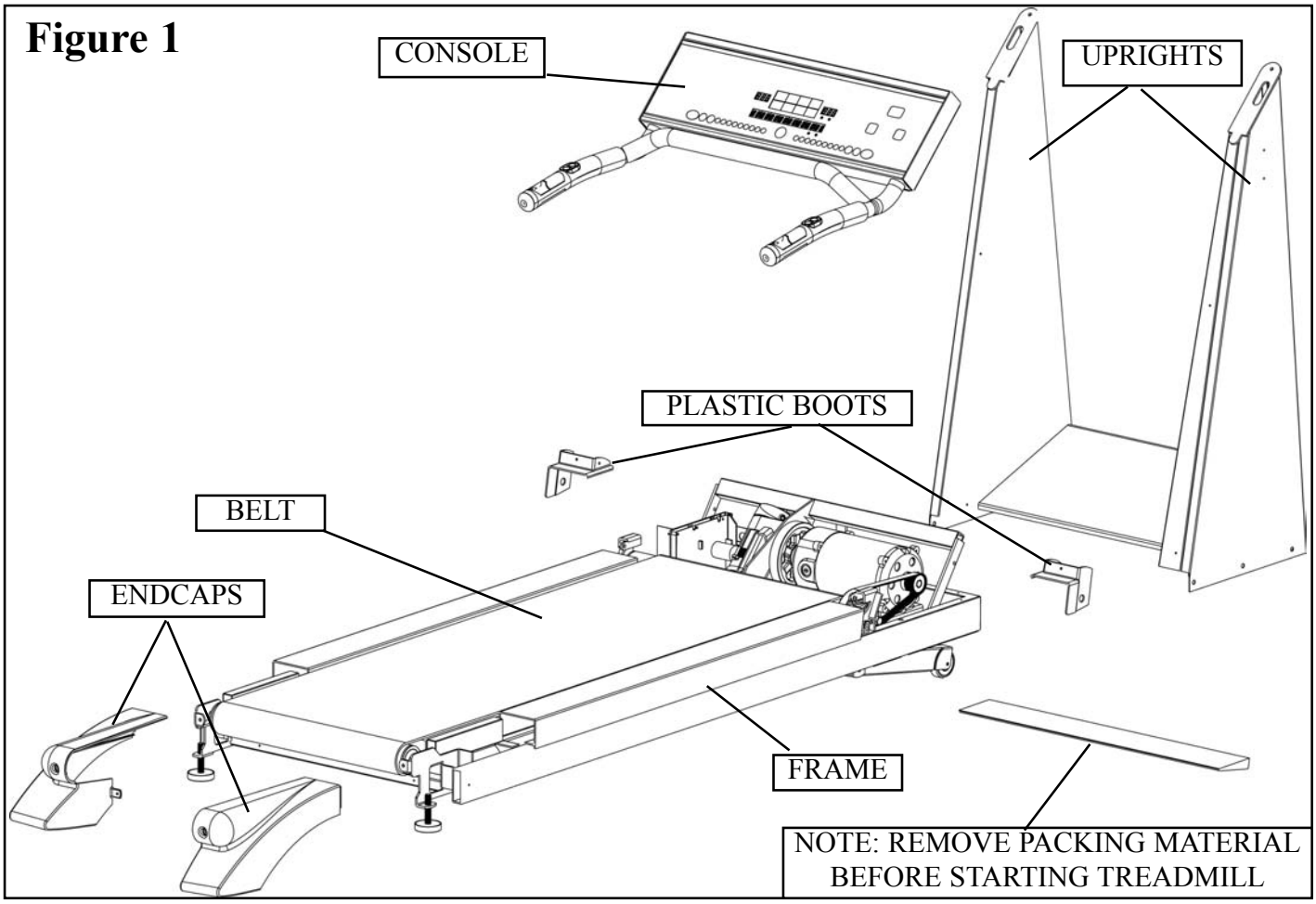

Download from Www.Somanuals.com. All Manuals Search And Download.

Assembly

After opening the box, remove any packing material from the treadmill.
Do not throw away any packing materials until the unit is working properly.
Place the base on a clean, level surface. Make sure the electrical cord will easily reach an electrical outlet.

Locate the hardware pack and identify the following parts required for assembly.

Main Components:	**Key #**	**Qty.**
Console Assembly	24-0279	1
Upright Assembly	23-0199	1
Boot Left	06-0246	1
Boot Right	06-0245	1
Endcap Left	06-0238	1
Endcap Right	06-0239	1

Insert Pack:	**Key #**	**Qty.**
Philip Screw #8*5/8”	02-0004	10
Button Head Screw 5/16-18*3/4”	02-0125	6
Button Head Screw 1/4-20*3/4”	02-0202	2
Safety Key	02-0176	1
Allen Wrench 3/16”	02-0152	1
Allen Wrench 5/16”	02-0154	1
Allen Wrench Clip	06-0024	1
Cup Holder	02-0167	1
Owner’s Manual	15-0170	1
Chest Strap (OB Model Only)	07-0053	1

Download from Www.Somanuals.com. All Manuals Search And Download.

Assembly

WARNING: Do not plug treadmill in until assembly is complete. Failure to follow this warning could result in electrical shock and/or injury.

CAUTION: Keys Fitness recommends using two people to assemble the treadmill. Before beginning, read all instructions and become familiar with the parts. In addition, look at the motor controller circuit board on the base and find the slot where the wire harness plugs in.

Refer to Assembly Diagram (Figure 2) on next page.

1. While one person is holding the Upright Assembly secure in the air, attach the Console Harness to the Lower Board. Place excess cable inside the left upright.

2. Slowly lower the Upright Assembly onto the Deck Assembly while aligning the bolt holes. Secure using 6 Button Head Screw 5/16-18*3/4" on the sides.

3. Attach the Lower Console Harness into the Upper Console Harness. Place excess cable into the left upright.

4. Attach the Console Assembly onto the Upright Assembly and secure using 2 Button Head Screw 5/16-18*3/4.

5. Install Plastic Boots to cover the gaps between the Upright Assembly and Deck Assembly. Secure each Metal Boots with 3 Philip Screw #8*5/8".

6. Install End Caps with 2 Button Head Screw 1/4-20*3/4" on the ends and 2 #8 x 5/8" pan head screws on the sides (see diagram for orientation).

7. Securely tighten all bolts and screws.

8. **Remove packing material before starting treadmill.**

9. Be sure that the treadmill is level to the floor. The rear feet can be adjusted to level the treadmill. Assembly is now complete!

Download from Www.Somanuals.com. All Manuals Search And Download.

Figure 2

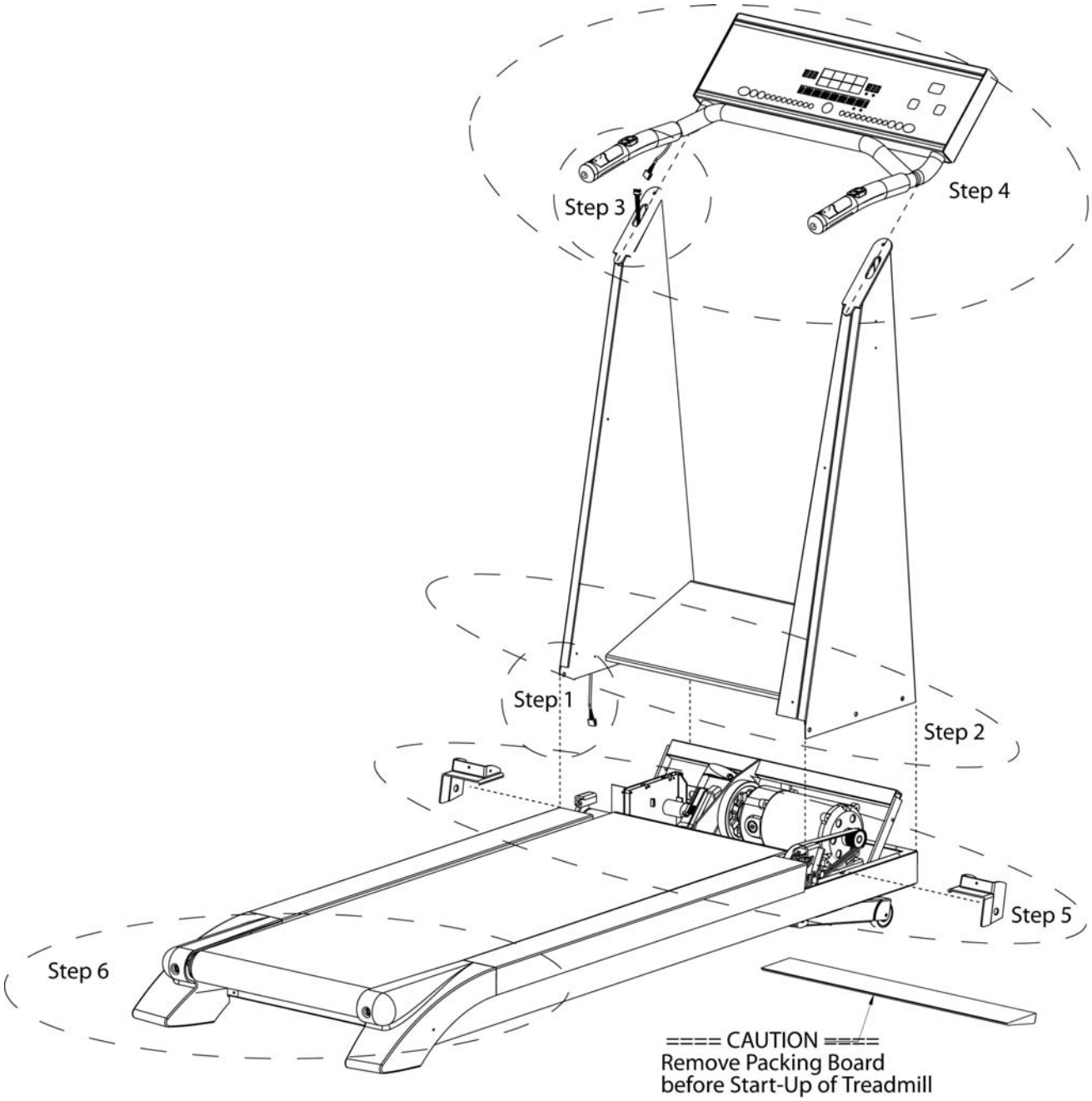

Download from Www.Somanuals.com. All Manuals Search And Download.

Power Requirements

IMPROPER CONNECTION OF THE EQUIPMENT GROUNDING CONNECTOR CAN RESULT IN A RISK OF AN ELECTRIC SHOCK. CHECK WITH A QUALIFIED ELECTRICIAN OR SERVICE MAN IF YOU ARE IN DOUBT AS TO WHETHER THE PRODUCT IS PROPERLY GROUNDED. DO NOT MODIFY THE PLUG PROVIDED WITH THE PRODUCT. IF PLUG WILL NOT FIT THE OUTLET, HAVE A PROPER OUTLET INSTALLED BY A QUALIFIED ELECTRICIAN.

This treadmill can be seriously damaged by sudden voltage changes in your home's electrical power. Voltage spikes, surges, and noise interference can result from weather conditions or from other appliances being turned on or off. To reduce the possibility of treadmill damage, always use a dedicated **surge protector** (not included) with your treadmill.

Surge protectors can be purchased at most hardware stores. The manufacturer recommends a single outlet surge protector with UL 1449 rating as a Transient Voltage Surge Suppressor (TVSS) with UL suppressed voltage rating of 400V or less and an electrical rating of 120VAC, 15 amps.

This treadmill must be grounded to reduce the risk of electrical shock. Grounding provides a path of least resistance for electric current should the treadmill malfunction. This treadmill comes with an electrical cord with an equipment-grounding conductor and a grounding plug. Always plug the power cord into a surge protector, and plug the surge protector into an appropriate outlet that is properly installed and grounded in accordance with all local codes and ordinances. Do not connect other equipment to the surge protector or this could cause permanent damage to your treadmill.
This product is for use on a nominal 120-volt circuit and has a grounding plug that looks like the plug illustrated in the drawing below.

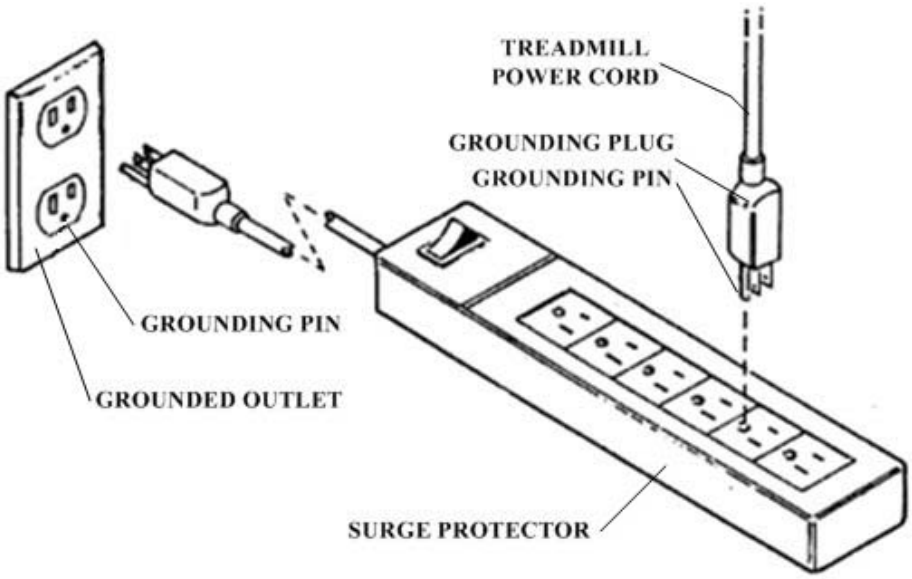

Download from Www.Somanuals.com. All Manuals Search And Download.

Console Panel Functions

There are several display windows on the control panel to provide feedback information. Refer to Figure 3.

CENTER INFORMATION WINDOW: (Long rectangular box near bottom of console) Provides user infor mation before starting. After starting indicates **INCLINE**, **TIME** and **SPEED** or **PACE**.

INCLINE: Indicates incline in percent of grade in .5% increments (0%-15%).

TIME: Indicates elapsed time after pressing START in minutes and seconds(0-99 minutes, 0-59 seconds).

SPEED: Indicates MPH in .1MPH increments (.6 MPH to 12MPH). During operation the MODE button will toggle this window between speed and pace.

PACE: Indicates amount of time required to complete 1 mile at current speed. During operation the ENTER MODE button will toggle this window between SPEED and PACE.

ENTER MODE: Used for programming functions.

DISTANCE: Indicates miles traveled in .01 mile increments up to 9.99 and .1 mile increments above 10 miles.

CALORIES: Indicates estimated calories burned based on 150 lb. person at the indicated speed, incline, and time. During operation the **ENTER MODE** button will toggle this window between calories or pulse.

PULSE: Indicates pulse rate. PULSE will not register unless you have both hands on the handgrips. During operation if PULSE is activated INCLINE will only show when adjustments are made.

DOT MATRIX: In manual mode, indicates Lap Counter in 1/4 mile increments. In program mode, indicates progress of program as a blinking diode and shows program profile.

ENTER PROGRAM: Used to scroll between pre-set and user programs.

PROGRAM UP/ PROGRAM DOWN: Scrolls program levels 1-9, with 1 being the easiest and 9 being the most difficult.

START/STOP: Starts the treadmill after a 3 second delay. Stops the treadmill when it is in operation.

INCLINE+/-: Adjusts the percent of incline during programming or use. Also can be used during programming to scroll through programs.

INCLINE 2-10: One Touch buttons to change percent of grade from 2%-10%. For incline greater than 10% use the UP button.

STOP: Stops the motion of the treadmill at any point during operation. Also used as a Pause function, retaining information in all windows unless safety key is removed.

SPEED 2-10: One touch buttons to change speed in 1MPH increments from 2-10MPH. For speeds greater than 10MPH use the Speed + button.

SPEED +/-: Adjusts the speed in .1 MPH increments during programming or use.

HEART RATE MODE: Used to select heart rate program.

HEART RATE TARGET UP: Scrolls through heart rate programs

HEART RATE TARGET DOWN: Scrolls through heart rate programs

Download from Www.Somanuals.com. All Manuals Search And Download.

KEYS 9000 Overlay

Figure 3

Download from Www.Somanuals.com. All Manuals Search And Download.

QUICK START/MANUAL MODE

1. Plug into a surge protector outlet.
2. Press Power toggle switch on lower rear of unit or press the ENTER PROGRAM button repeatedly to scroll to MANUAL mode.
3. Attach the **Safety Key** to the treadmill console.
4. Stand on the treadmill and straddle belt. Attach safety key clip to your clothes.
5. Press START/STOP button. Belt will begin to move after 3 seconds. Step on belt slowly after the belt starts moving. SPEED or INCLINE may be adjusted at any time by using the appropriate + (increase) or – (decrease) buttons on the console, + (increase) or – (decrease) buttons on the handgrips or one touch buttons on the console. TIME default is 30 minutes.
6. To end your workout, press STOP button. Belt will gradually slow to zero.
7. To pause your workout slow the treadmill to 2 MPH or below using the SPEED - (decrease) buttons on the console, – (decrease) buttons on the handgrips or Speed one touch "2" button on the console. Press the STOP button.
8. To re-start after pausing: Press the START button. **WARNING: THE TREADMILL BELT WILL RESUME AT THE SPEED THE TREADMILL WAS MOVING BEFORE PAUSING.**

MANUAL MODE

1. Plug into a surge protector outlet.
2. Press Power toggle switch on lower rear of unit or press the ENTER PROGRAM button repeatedly to scroll to MANUAL mode.
3. Attach the **Safety Key** to the treadmill console.
4. Stand on the treadmill and straddle belt. Attach safety key clip to your clothes.
5. The Information Window will scroll the following messages:
   ADJUST WEIGHT
   PRESS ENTER MODE
   PRESS START
   The weight that was last entered will show in Information Window. Use the SPEED + - buttons on the console or the SPEED + - buttons on the handgrips to enter desired weight.
6. Press START/STOP button. Belt will begin to move after 4 seconds. Step on belt slowly after the belt starts moving. SPEED or INCLINE may be adjusted at any time by using the appropriate + (increase) or – (decrease) buttons on the console, + (increase) or – (decrease) buttons on the handgrips or one touch buttons on the console. TIME default is 30 minutes.
7. To pause your workout slow the treadmill to 2 MPH or below using the SPEED - (decrease) buttons on the console, – (decrease) buttons on the handgrips or Speed one touch "2" button on the console. Press the STOP button.
8. To re-start after pausing: Press the START button. **WARNING: THE TREADMILL BELT WILL RESUME AT THE SPEED THE TREADMILL WAS MOVING BEFORE PAUSING.**
9. To reset DISTANCE, TIME and CALORIES counter during use, press and hold START/STOP button for approximately 5 seconds or until zeros appear in the DISTANCE, TIME and Information Window. To

Download from Www.Somanuals.com. All Manuals Search And Download.

10. To use Countdown Timer Feature for TIME and DISTANCE, after entering WEIGHT press ENTER-MODE button the Information Window will now scroll through the following items:
    ADJUST TIME + -
    NEXT ENTER
    ADJ DISTANCE
    NEXT ENTER
    PRESS START
11. Adjust TIME using the SPEED + - buttons on the console or the handgrips. Press ENTER MODE.
12. Adjust the DISTANCE using the SPEED + - buttons on the console or handgrips. Press START STOP to begin countdown.
    Note: Once elapsed time or distance has been reached, countodwn reaches 0, the Countdown Feature will begin counting up.
13. To save manual workout: After pressing STOP button , Press and Hold the ENTER/MODE button until SAVE USER 1, SAVE USER 2, or SAVE USER 3 appears in Information Window. Press the + INCLINE button until USER 1, USER 2 or USER 3 message appears in the Information Window. When you have selected the USER PROGRAM that you would like to save your workout to, press and hold the ENTER/MODE button until SAVE USER 1, SAVE USER 2 or SAVE USER 3 appears in the Information Window. Your program is now saved.
    Note: You must remove the Safety Key for the information to be entered into the console's computer. If you do not remove the Safety Key the USER PROGRAM will not be saved.

PROGRAM MODE

1. Plug into a surge protector outlet.
2. Press Power toggle switch on lower rear of unit or press the ENTER PROGRAM button repeatedly to scroll to MANUAL mode.
3. Attach the **Safety Key** to the treadmill console.
4. Stand on the treadmill and straddle belt. Attach safety key clip to your clothes.
   The weight that was entered last will show in Information Window. Use the SPEED + - buttons on the console or the SPEED + - buttons on the handgrips to enter desired weight.
5. Press ENTER MODE.
6. The Information Window will now scroll through the following items:s NEXT UP/DOWN, ENTER MODE, PRESS START. To select a program use the INCLINE + - on the console or handgrips or use the PROGRAM UP or PROGRAM DOWN buttons to scroll through the following programs:
   MANUAL - See previous section.
   USER - See following section for USER PROGRAM instructions.
   KILLER HILLS - Designed to have a constant SPEED while incrementally increasing the INCLINE through the first half of the program, then decreasing the INCLINE through the second half of the program.
   WEIGHT MANAGER - Designed to have a constant SPEED while alternating the INCLINE through the entire program.
   PLATEAU - Designed to incrementally increase the SPEED and INCLINE through the first half of the program, then decrease the SPEED and INCLINE through the second half of the program.
   INTERVAL RUNNING - Designed to have a constant INCLINE while alternating the SPEED through the entire program.

Download from Www.Somanuals.com. All Manuals Search And Download.

* See Figure 4 for graphs of SPEED and INCLINE for each program. See Figure 5 for charts of SPEED and INCLINE settings for each PROGRAM LEVEL.

7. You do not have to select the program, just scroll through until you see the desired program in the Infomation Window. After a few seconds the Information Window will scroll the following messages:
   ADJUST LEVEL +/-
   NEXT UP/DOWN
   PRESS START
8. To select a program intensity level (See Calorie Window) use the PROGRAM UP and PROGRAM DOWN buttons to select a level 1-9. The higher the level, the more intense the workout will be.
9. Press ENTER MODE button to select Program Level.
10. The Infomation Window will now scroll the following messages:
    ADJUST TIME +/-
    ENTER MODE
    PRESS START
11. To set the TIME for your workout use the SPEED + - buttons on the console or handgrips, or the one touch buttons on the console to select the TIME duration for your workout. Minimum time is 15 minutes.

Figure 4

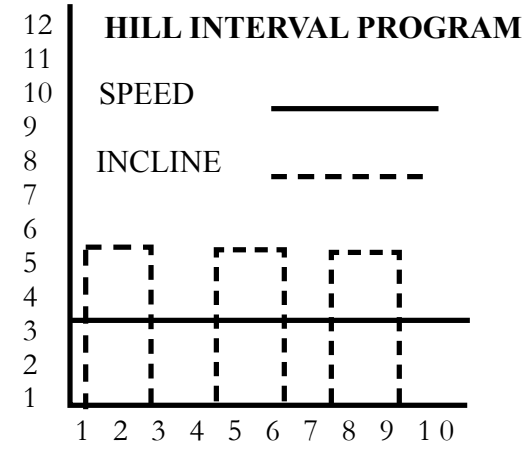

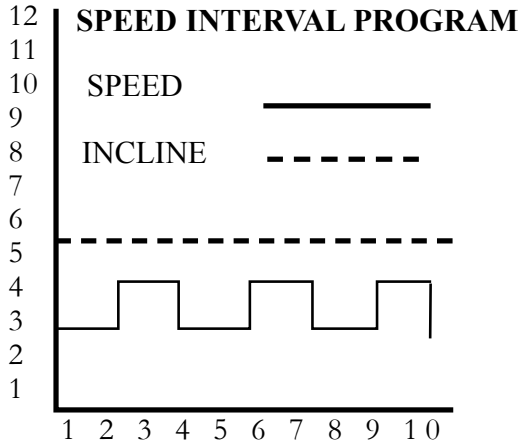

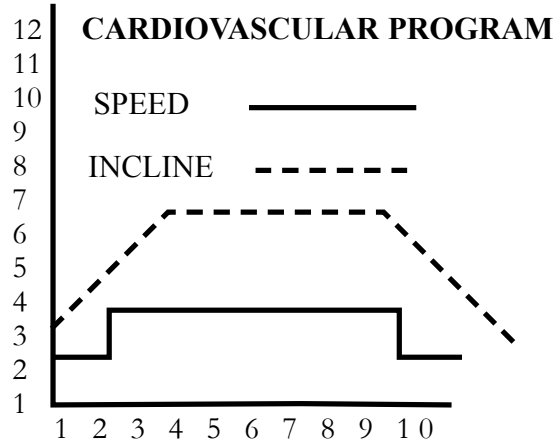

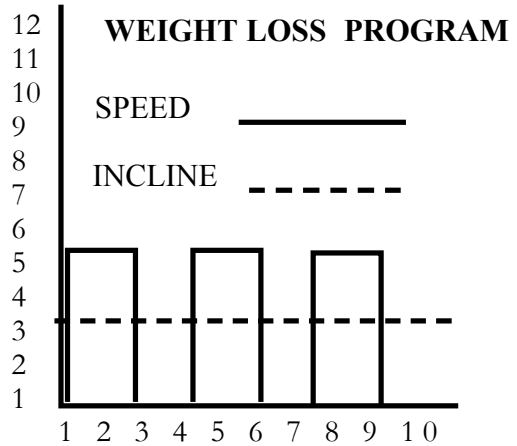

Download from Www.Somanuals.com. All Manuals Search And Download.

12 Press the START/STOP. Treadmill will begin operation after 3 seconds.
13. Once treadmill program has begun you can adjust the SPEED and INCLINE by using the + - buttons on the console or handgrips, or the one touch buttons on the console.
14. To pause your workout slow the treadmill to 2 MPH or below using the SPEED - (decrease) buttons on the console, – (decrease) buttons on the handgrips or Speed one touch "2" button on the console. Press the STOP button. This will retain the treadmill and retain all workout information. To resume workout press START/STOP button.
15. To reset DISTANCE, TIME and CALORIES counter during use, press and hold START/STOP button for approximately 5 seconds or until zeros appear in the DISTANCE, TIME and Information Window. To reset when not in use, press and hold the STOP button for 5 seconds.
16. You may change between programs while using treadmill by pressing the ENTER PROGRAM button until the desired program is shown in Information Window. Press PROGRAM UP or DOWN to change programs. Workout will resume from the original time entered.

USER PROGRAM -
The USER PROGRAM allows up to 50 changes to be made to SPEED and/or INCLINE. The treadmill is equipped with 3 USER programs. One SPEED and INCLINE change can be made for every 30 second time block.

1. To enter a USER PROGRAM start and complete a manual workout that you would like to save.
2. Press STOP.
3. Press and hold the ENTER MODE button until SAVE USER 1 appears in the Information Window.
4. Press the + INCLINE button until USER 1, USER 2 or USER 3 message appears in the Information Window.
5. When you have selected the USER PROGRAM that you would like to save your workout to, press and hold the ENTER/MODE button until SAVE USER 1, SAVE USER 2 or SAVE USER 3 appears in the Information Window.
6. Your USER PROGRAM is now saved.

Note: You must remove the Safety Key for the information to be entered into the console's computer. If you do not remove the Safety Key the USER PROGRAM will not be saved.

Download from Www.Somanuals.com. All Manuals Search And Download.

Figure 5

HILL INTERVAL PROGRAM		
LEVEL	SPEED MPH MAX	INCLINE MAX
1	2.4	4.0
2	2.8	5.0
3	3.2	6.0
4	3.6	7.0
5	4.2	8.0
6	4.6	9.0
7	5.0	10.0
8	5.4	11.0
9	6.0	12.0

WEIGHT LOSS PROGRAM		
LEVEL	SPEED MPH MAX	INCLINE MAX
1	2.6	2.0
2	2.8	3.0
3	3.0	4.0
4	3.2	5.0
5	3.4	6.0
6	3.6	7.0
7	3.8	8.0
8	4.0	9.0
9	4.2	10.0

CARDIOVASCULAR PROGRAM		
LEVEL	SPEED MPH MAX	INCLINE MAX
1	2.4	4.0
2	2.8	5.0
3	3.2	6.0
4	3.6	7.0
5	4.2	8.0
6	4.6	9.0
7	5.0	10.0
8	5.4	11.0
9	6.0	12.0

SPEED INVTERVAL PROGRAM		
LEVEL	SPEED MPH MAX	INCLINE MAX
1	2.4	4.0
2	2.8	5.0
3	3.2	6.0
4	3.6	7.0
5	4.2	8.0
6	4.6	9.0
7	5.0	10.0
8	5.4	11.0
9	6.0	12.0

Download from Www.Somanuals.com. All Manuals Search And Download.

HEART RATE MODE

The treadmill may be used at any time in the Heart Rate Mode. The Heart Rate program is designed to keep your heart at a desired amount of "beats per minute" by automatically adjusting the incline. For example, you have programmed in a desired heart rate of 125 BPM and your heart rate is only at 110 BPM. If you are wearing the Chest Strap Transmitter correctly, the incline will automatically increase to intensify the work load, causing your heart rate to slowly climb to 125 BPM. It is suggested that the Chest Strap Transmitter be positioned as close to your heart as possible, against the skin, 1-2 inches below the pectoral muscles. The PULSE light on the console will blink when the Chest Strap signal is reaching the console. The treadmill will attempt to maintain your target heart rate through adjustments to the incline for the remainder of your workout. In the same respect, if your heart rate is above your programmed amount of BPM's, the incline will automatically decrease to lower your heart rate. See Figure 3, Figure 4, and section entitled"Monitoring Your Heart Rate" for additional information on TARGET HEART RATES.

The Heart Rate Mode is safe and easy to understand. The user first sets the maximum Incline, Heart Rate Target and Time. The workout is divided into three stages: Warm Up, Heart Rate Interactive and Cool Down. In the Warm Up stage the treadmill is in MANUAL mode while the user adjusts Speed and Incline while approaching Target Heart Rate. The Warm Up stage ends and the Heart Rate INTERACTIVE Mode begins when the user's Target Heart Rate is within 10 beats of the preset Target Heart Rate. The treadmill will take over and adjust Incline in .5 increments up to the maximum Incline programmed to keep user's Heart Rate within 10 beats of preset target. In the COOL DOWN stage the treadmill is in MANUAL mode while the user gradually decreases INCLINE and SPEED to slowly cool down.

HEART RATE PRESET PROGRAM OVERVIEW

There are a total of 14 different Heart Rate Programs. These are divided into three groups. The following is a brief description of each of the three groups.

Time Based Target Heart Rate Programs- Programs are all Time based. There are five different programs in this group. You may preset your Target Heart Rate and maximum Incline.

Distance Based Target Heart Rate Programs - Programs are all Distance based. There are 4 different programs in this group: 2 Mile, 4 Mile, 5K or 10K You may preset your Target Heart Rate and maximum Incline. The Time of your workout will depend on your SPEED.

Interval Time Based Target Heart Rate Programs - These Programs allows you to program periods of rest between periods of work. You must enter your Target Heart Rate, maximum Incline, duration of workout, and duration of work and rest intervals.

HEART RATE PROGRAM OPERATION FOR TIME AND DISTANCE PROGRAMS

1. Plug treadmill into a surge protector outlet.
2. Press Power toggle switch on lower rear of unit..
3. Attach the Safety Key on to the treadmill console.
4. Attach the Heart Rate Monitor as previously instructed. If the display is receiving a signal from the chest strap, the incline window will begin to display your current heart rate. If no signal is being received adjust the Heart Rate Monitor location.
5. Stand on the treadmill and straddle belt. Attach safety key clip to your clothes.
6. The Information Window will scroll the following messages:
   ADJUST WEIGHT
   PRESS ENTER MODE
   PRESS START
   The weight that was entered last will show in Information Window. Use the SPEED + - buttons on the console or the SPEED + - buttons on the handgrips to enter desired weight. Press ENTER MODE
7. Press the HEART RATE MODE button. Use Heart Rate Target UP and DOWN buttons to scroll to the desired HEART RATE PROGRAM.

Download from Www.Somanuals.com. All Manuals Search And Download.

8. You do not have to select the program. After a few seconds the Information Window will scroll through the following items:
   ENTER MODE
   NEXT UP/DOWN
   PRESS START
9. Press ENTER MODE button. The Information Window will now scroll through the following items:
   ADJUST TARGET +/-
   NEXT MODE
   PRESS START
10. Using the HEART RATE UP or DOWN button on the console adjust your TARGET HEART RATE to the desired BPM (beats per minute). Press ENTER MODE.
11. The Information Window will now scroll through the following items::
   ADJ TIME +/-
   NEXT MODE
   PRESS START
12. Using the SPEED +/- buttons on the console or handgrips, or the one touch buttons on the console adjust Time. Note: TIME is not entered for Distance programs, 2 Mile, 4 Mile, 5K or 10K. Press ENTER MODE button.
13. The Information Window will now scroll through the following items:
   ADJMXGRADE +/ -
   NEXT MODE
   PRESS START
14. Using the INCLINE +/- buttons on the console or handgrips, or the one touch buttons on the console to enter maximum INCLINE for y our work out.
15. You are now ready to START your Time or Distance HEART RATE workout. Press START to begin.
16. Your workout will begin in the Warm Up Stage. In this stage, the treadmill will operate in Manual Mode. By gradually increasing the SPEED, INCLINE or both you should gradually approach your TARGET HEART RATE. Note: The INCLINE can not exceed the maximum that was programmed previously.
17. Once you are within 15 BPM of your TARGET HEART RATE, the Information window will read:
   APPROACHING TARGET XXX.
18. Once you are within 10 BPM of your TARGET HEART RATE, the Information window will read:
   BEGINNING
   TARGET HR
   HANDS FREE
19. At this point, the treadmill computer will take over and adjust INCLINE automatically to keep to increase TARGET HEART RATE. The TIME window will reset and begin counting down from the time entered during programming.
20. Once you are within 2 BPM of programmed HEART RATE the Information Window will read:
   AT TARGET
   21. When TIME is elapsed the HEART RATE INTERACTIVE stage is complete. The Information Window will read:
   COOL DOWN
   DIST XXX
   CALS XXXX
   TIME XX:XX
   COOL DOWN

Download from Www.Somanuals.com. All Manuals Search And Download.

22. COOL DOWN will remain in the Information Window to remind you that you are in the COOL DOWN stage.
23. The treadmill will now operate in MANUAL MODE. The TIME will reset to zero and begin counting up. Gradually decrease INCLINE, SPEED or both to lower HEART RATE. Spend at least two minutes in the COOL DOWN mode. It is recommended that equal time be spent in the WARM UP and COOL DOWN stages.
24. Press STOP to finish workout. The Information Window will display your workout information. This will include:
    Average Heart Rate
    Distance
    Calories
    Each time your press STOP the information will display again.

    NOTES: Do not touch the INCLINE button once reaching your TARGET HEART RATE. The tread mill's computer will automatically switch from the HEART RATE INTERACTIVE stage to the COOL DOWN stage. If your INCLINE reaches the preset maximum, MAXGRADE will display in the INFOR MATION WINDOW.
    If you need to adjust the TARGET HEART RATE during INTERACTIVE stage, press the HEART RATE MODE button. Adjust the TARGET HEART RATE using the HEART RATE TARGET UP or DOWN buttons.

HEART RATE PROGRAM OPERATION FOR INTERVAL PROGRAMS

Interval workouts offer variety and help you attain higher levels of conditionaing in a shorter period of time. It is recommended that you do not do an Interval workout until you have used your treadmill on a regular basis and have a working knowledge of your Target Heart rate and condition level.

1. Plug treadmill into a surge protector outlet.
2. Press Power toggle switch on lower rear of unit or the ENTER PROGRAM button.
3. Attach the Safety Key on to the treadmill console.
4. Attach the Heart Rate Monitor as previously instructed. If the display is receiving a signal from the chest strap, the incline window will begin to display your current heart rate. If no signal is being received adjust the Heart Rate Monitor location.
5. Stand on the treadmill and straddle belt. Attach safety key clip to your clothes.
6. The Information Window will scroll the following messages:
   ADJUST WEIGHT
   ENTER MODE
   PRESS START
   The weight that was entered last will show in Information Window. Use the SPEED + - buttons on the console or the SPEED + - buttons on the handgrips to enter desired weight. Press ENTER MODE
7. Press the HEART RATE MODE button. The Information Window will now scroll through the following items:
   NEXT UP/DOWN
   ENTER MODE
   PRESS START
8. Use Heart Rate Target UP and DOWN buttons to scroll to the desired INTERVAL HEART RATE PRO GRAM. Press ENTER MODE.

Download from Www.Somanuals.com. All Manuals Search And Download.

9. The Information Window will now scroll through the following items:
   ADJUST TARGET +/-
   NEXT MODE
   PRESS START
10. Using the HEART RATE UP or DOWN button on the console or handgrips, or the one touch buttons on the console adjust your TARGET HEART RATE to the desired BPM (beats per minute). Press ENTER MODE.
11. The Information Window will now scroll through the following items::
   ADJWORK +/-
   NEXT MODE
   PRESS START
12. Using the SPEED +/- buttons on the console or handgrips, or the one touch buttons on the console, select your desired work interval. Interval may be adjusted from 30 seconds to 3 minutes, in 5 second seg ments. Press ENTER MODE.
13. The Information Window will now scroll through the following items::
   ADJREST +/-
   NEXT MODE
   PRESS START
14. Using the SPEED +/- buttons on the console or handgrips, or the one touch buttons on the console, select your desired rest interval. Interval may be adjusted from 30 seconds to 3 minutes, in 5 second seg ments. Press ENTER MODE.
15. The Information Window will now scroll through the following items::
   ADJMXGRADE + -
   NEXT MODE
   PRESS START
16. Using the INCLINE +/- buttons on the console or handgrips, or the one touch buttons on the console to enter maximum INCLINE for your workout.
17. You are now ready to START your Interval HEART RATE workout. Press START to begin.
18. The Information Window will now scroll through the following items::
   STARTING 3
   STARTING 2
   STARTING 1
   ADJSPEED +/-
   ADJGRADE +/-
   WARM UP
   TARGET XXX
19. Your workout will begin in the Warm Up Stage. In this stage, the treadmill will operate in Manual Mode. By gradually increasing the SPEED, INCLINE or both you should gradually approach your TARGET HEART RATE. Note: The INCLINE can not exceed the maximum that was programmed previously.
20. Once you are within 15 BPM of your TARGET HEART RATE, the Information window will read: APPROACHING TARGET XXX.
21. Once you are within 10 BPM of your TARGET HEART RATE, the Information window will read:
   BEGINNING
   TARGET HR
   HANDS FREE

Download from Www.Somanuals.com. All Manuals Search And Download.

22. At this point, the treadmill computer will take over and adjust INCLINE automatically to keep Target Heart Rate at preset level.
23. Once you are within 2 BPM of programmed HEART RATE the Information Window will read:
    AT TARGET
    WORKINT XX:XX
24. TIME will decrease from the Work Interval Time preset previously.
25. When the countdown reaches zero, the Information Window will read:
    RESTINT XX:XX
26. Time will decrease from the Rest Invterval time preset previously.
27. As your Heart Rate increases or decreases from the Target the treadmill will automatically make adjust ments to the INCLINE to keep your heart rate near the target.
25. When you return to the Work Interval, your INCLINE will return to a calculated average of the INCLINE that was used in previous Work Intervals.
26. To end your workout press STOP.
27. The Information Window will now scroll through the following items::
    COOL DOWN
    DIST XXX
    CALS XXXX
    TIME XX:XX
    COOL DOWN
28. COOL DOWN will remain in the Information Window to remind you that you are in the COOL DOWN stage.
29. The treadmill will now operate in MANUAL MODE. The TIME will reset to zero and begin counting up. Gradually decrease INCLINE, SPEED or both to lower Heart Rate. Spend at least two minutes in the COOL DOWN mode. It is recommended that equal time be spent in the WARM UP and COOL DOWN stages.
30. Press STOP to finish workout. The Information Window will display your workout information. This will include:
    Average Heart Rate
    Distance
    Calories
    Each time your press STOP the information will display again.

Download from Www.Somanuals.com. All Manuals Search And Download.

Monitoring Your Heart Rate

KeysFitness

Monitoring Your Heart Rate

To obtain the greatest cardiovascular benefits from your exercise workout, it is important to work within your target heart rate zone. The American Heart Association (AHA) defines this target as 60%-75% percent of your maximum heart rate.

Your maximum heart rate may be roughly calculated by subtracting your age from 220. Your maximum heart rate and aerobic capacity naturally decreases as you age. This may vary from one person to another, but use this number to find your approximate effective target zone. For example, the maximum heart rate for an average 40 year-old is 180 bpm. The target heart rate zone is 60%-75% of 180 or 108-135 bpm. See ***Fitness Safety*** below.

Before beginning your workout, check your normal resting heart rate. Place your fingers lightly against your neck, or against your wrist over the main artery. After finding your pulse, count the number of beats in 10 seconds. Multiply the number of beats by six to determine your pulse rate per minute. We recommend taking your heart rate at these times; at rest, after warming up, during your workout and two minutes into your cool down, to accurately track your progress as it relates to better fitness.

During your first several months of exercising, the AHA recommends aiming for the lower part of the target heart rate zone-60%, then gradually progressing up to 75%.
According to the AHA, exercising above 75% of your maximum heart rate may be too strenuous unless you are in top physical condition. Exercising below 60% of your maximum will result in minimal cardiovascular conditioning.

Check your pulse recovery rate – If your pulse is over 100 bpm five minutes after you stop exercising, or if it's higher than normal the morning after exercising, your exertion may have been too strenuous for your current fitness level. Rest and reduce the intensity next time.

Fitness Safety *The target heart rate chart(Figure 7) indicates average rate zones for different ages. A variety of different factors (including medication, emotional state, temperature and other conditions) can affect the target heart rate zone that is best for you. Your physician or health care professional can help you determine the exercise intensity that is appropriate for your age and condition.*

(MHR) = Maximum Heart Rate
(THR) = Target Heart Rate

220 - age = maximum heart rate (MHR)
MHR x .60 = 60% of your maximum heart rate.
MHR x .75 = 75% of your maximum heart rate.

For example, if you are 30 years old, your calculations will be as follows:
220 - 30 = 190
190 x .60 = 114 (low end or 60% of MHR)
190 x .75 = 142 (high end or 75% of MHR)
30 year-old (THR) Target Heart Rate would be 114-142
See Heart Rate Table (on next page) for additional calculations.

Download from Www.Somanuals.com. All Manuals Search And Download.

FIGURE 7

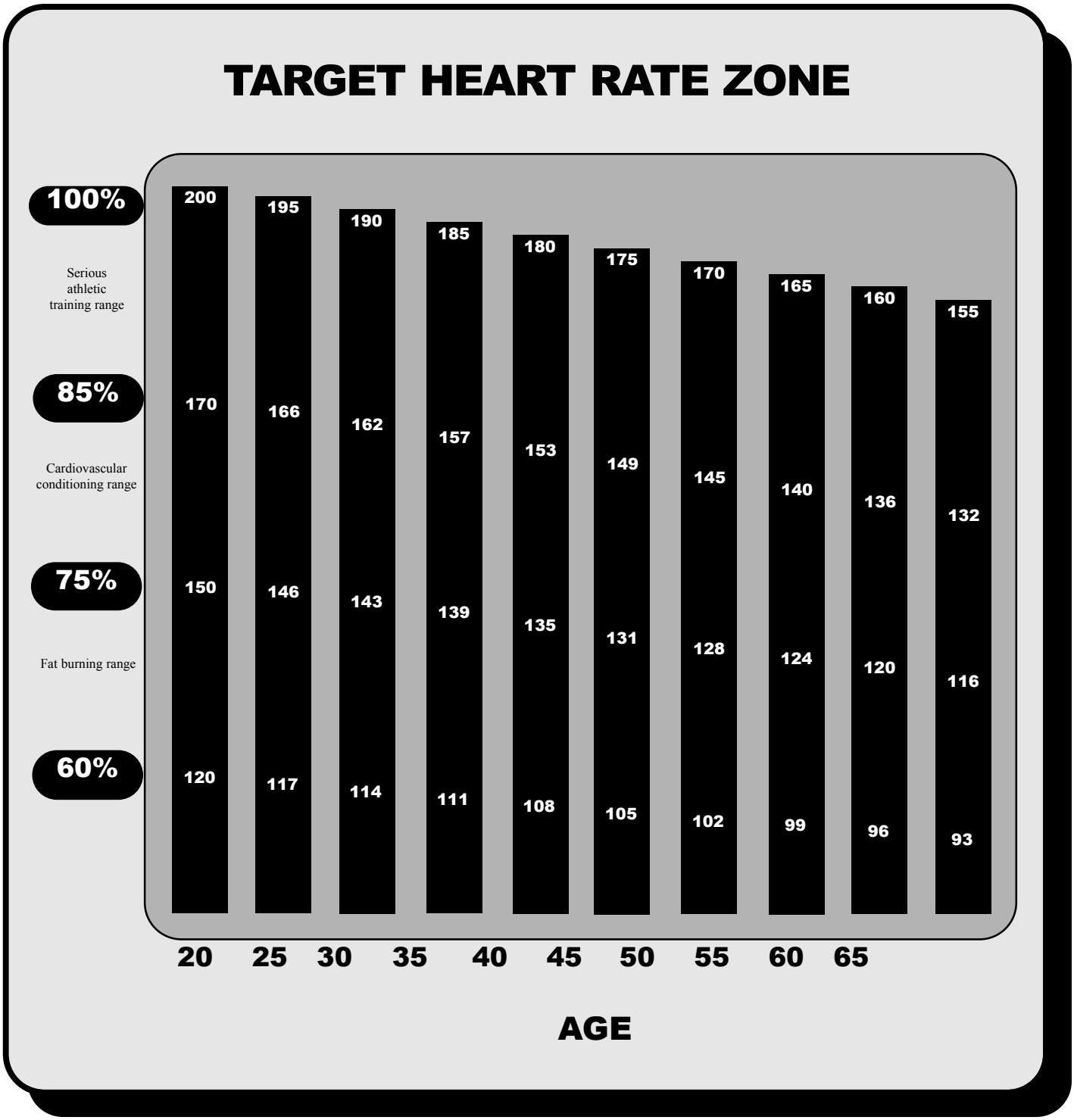

Download from Www.Somanuals.com. All Manuals Search And Download.

EXERCISE GUIDELINES

WARNING! Before beginning this or any exercise program, you should consult your physician. This is especially important for individuals over the age of 35 or individuals with pre-existing health problems.

Warming up prepares the body for the exercise by increasing circulation, supplying more oxygen to the muscles and raising body temperature. Begin each workout with 5 to 10 minutes of stretching and light exercise to warm up. The photos on this page show several forms of basic stretching you may perform before your workouts. In order to achieve an adequate warm-up, perform each stretch three times.

TOE TOUCH STRETCH

Stand, bending your knees slightly and slowly bend forward from your hips. Allow your back and shoulders to relax as you reach down toward your toes as far as possible. Hold for 15 counts, then relax. This will stretch your hamstrings, back of knees, and back.

HAMSTRING STRETCH

Sit with one leg extended. Bring the sole of the opposite foot toward you and rest it against the inner thigh of your extended leg. Reach toward your toes as far as possible. Hold for 15 counts, then relax. This will stretch your hamstrings, lower back, and groin.

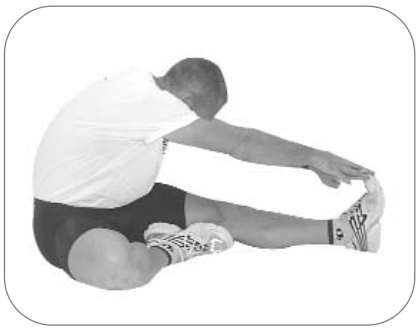

CALF/ACHILLES STRETCH

With one leg in front of the other, reach forward and place your hands against a wall. Keep your back leg straight and your back foot flat on the floor. Bend your front leg, lean forward and move your hips toward the wall. Hold for 15 counts, then relax. To cause further stretching of the Achilles tendon, bend your back leg as well. This will stretch your calves, Achilles tendons, and ankles.

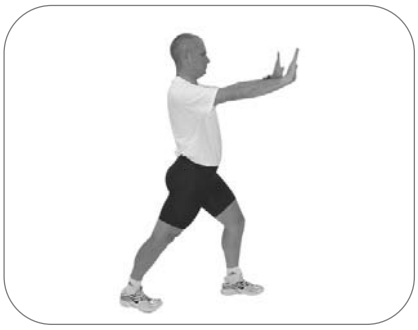

QUADRICEPS STRETCH

With one hand against a wall for balance, reach back and grasp one foot with your other hand. Bring your heel as close to your buttocks as possible. Hold for 15 counts, then relax. This will stretch your quadriceps and hip muscles.

INNER THIGH STRETCH

Sit with the soles of your feet together and your knees outward. Pull your feet toward your groin area as far as possible. Hold for 15 counts, then relax. This will stretch your quadriceps and hip muscles.

Download from Www.Somanuals.com. All Manuals Search And Download.

Change to MPH or KPH

Your treadmill will operate in British Units (miles per hour) or International Units (kilometers per hour). All treadmills are calibrated at the factory for British Units (miles per hour). To change the display to read in kilometers, follow the steps described here:

1. Turn power OFF. (Do not unplug treadmill.) Attach the safety key to the console.

2. Activate the calibration mode switch by inserting the eraser end of a pencil into the opening in the backside of the console (see diagram below).

3. Depress the calibration mode switch ONCE. CL11 should appear in the TIME window.

4. Pressing the SPEED +/- button will activate your choice.

5. To accept the setting, press the START/STOP button.

Download from Www.Somanuals.com. All Manuals Search And Download.

Calibration Sequence

Do not attempt to calibrate the treadmill unless an Error Code is present. See Error Messages (page 22).
Our treadmill is equipped with a software package that will perform a calibration sequence unique to your specific model number.
Please perform the following steps to calibrate the **Keys9000.**

1. Unplug power cord from outlet strip.
2. Attach Safety Key to console.
3. Plug power cord into outlet strip.
4 . Initiate calibration sequence. Locate the hole on the back of the console and insert the eraser end of a pen cil through the hole and press the calibration switch **twice**. As show on **page 18**.
5. **CL21** should appear in the Time window, if not, continue to press the calibration switch until CL21 appears.

Note: During the calibration sequence, the Time window will display which step you are at in the process (C21, C22, C23 and so on). The CAL/DIST window will display which key should be pressed next. For example, "E" for Enter, "P" for Power, or "SS" for Start / Stop.

6. **CL21:** MPH or KPH will be flashing in the Speed window, pressing the Speed +/ - button will toggle options. Choose **MPH** (KPH), press Enter.
7. **CL22:** 8, 10, or 12 (13, 16, or 20 in KPH mode) will be displayed in the Speed window, pressing the Speed +/ - button will toggle options. Choose **12** (or 16 for KPH mode), press Enter.
8. **CL23:** FFF, UUU, or HHH will be displayed in the Speed window, pressing the Speed +/ - button will tog gle options. Choose **UUU**, press Enter.
9. **CL24:** 111 or 222 will be displayed in the Speed window, pressing the Speed +/ - button will toggle options. Choose **222**, press Enter.
10. **CL25:** Verify "---" is displayed, press Enter.
11. **CL26:** OPA or OPI will be displayed in the Speed window, pressing the Speed +/ - button will toggle options. Choose **OPA**, press Enter.
12. **CL27:** Blank (nothing), "a", "b", "c", "d" or "e" will be displayed in the Incline window, pressing the Speed +/ - button will toggle options. Choose **"blank"**, press Enter.
13. CAL/DIST window will display **"55"**. Press Start / Stop. "**E"** will display in CAL/DIST window.
14. Press Enter Program button.
15. At this time, make sure you are not standing on the walking belt, as the machine will automatically initiate belt movement and run through a complete calibration and diagnostic routine. Press **Enter**. Belt will begin to move. Unit will begin self-calibration.
16. When Speed and Incline calibration has finished, press Power button **twice**, display should be blank, and treadmill should be ready for use.

To avoid possible damage to the treadmill and the possibility of injury, do not operate the treadmill until the problem is corrected. Call Keys Fitness Customer Service at (888)-340-0482 if problem persists.

Download from Www.Somanuals.com. All Manuals Search And Download.

Belt Adjustment

WARNING! Do not over-tighten rollers! This will cause premature roller bearing failure!
Belt adjustment and tension performs two functions: adjustment for tension and centering. Your new treadmill comes pre-adjusted from the factory for tension and centering. Please follow the procedures below if the belt shifts to the left or right while walking:

WALKING BELT IS SHIFTING TO THE LEFT (Diagram 1)
First, turn treadmill on to run at 1 mph. Using the hex key provided, turn the left rear roller adjustment bolt ¼ turn in the clockwise direction. Next, run the treadmill at 2.5 mph. You should see the belt start to correct itself by moving back toward the center. Repeat the above procedure until the walking belt is centered. It may be necessary to set walking belt tension once you have completed this procedure if the belt feels like it is slipping while walking. Refer below to the "Walking Belt Slipping" instructions.

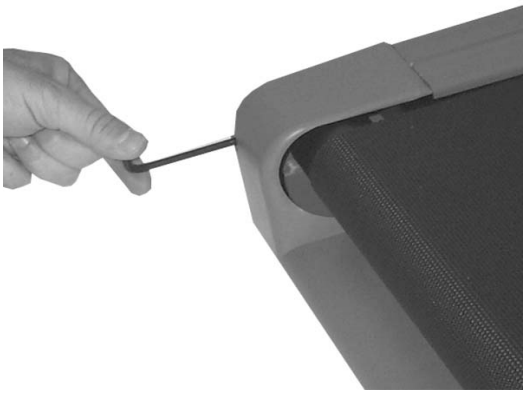

Diagram 1

WALKING BELT IS SHIFTING TO THE RIGHT (Diagram 2)
First, turn the treadmill on to run at 1 mph. Using the hex key provided, turn the right rear roller adjustment bolt ¼ turn in the clockwise direction. Next, run the treadmill at 2.5 mph. You should see the belt start to correct itself, moving back toward the center. Repeat the above procedure until the walking belt is centered. It may be necessary to set walking belt tension once you have completed this procedure if the belt feels like it is slipping while walking. Refer below to the "Walking Belt Slipping" instructions.

Diagram 2

WALKING BELT IS SLIPPING DURING USE (Diagram 3)
First, unplug the power cord from the surge protector. Using the hex key provided, turn both left and right rear roller adjustment bolts the same distance, usually a ¼ turn, in the clockwise direction. Plug the power cord back into the surge protector and run the treadmill at 2.5 mph. You should now walk on the belt to determine if the belt is still slipping. Repeat the above procedure until the walking belt is not slipping. The tension should be just tight enough not to slip.

Note: Turning the hex key counter clockwise brings the rear rollers and belt towards you.
Turning the hex key clockwise pushes the rear roller and belt away from you.

Diagram 3

Download from Www.Somanuals.com. All Manuals Search And Download.

Maintenance Instructions

WARNING! Before performing any maintenance to your treadmill, always unplug the power cord from the surge protector.

CLEANING: Routine cleaning of your unit will extend the life of your unit.
WARNING! To prevent electrical shock, be sure the power to the treadmill is OFF and the unit is unplugged from the wall electrical outlet before attempting any cleaning or maintenance.
AFTER EACH WORKOUT: Wipe off the console and other treadmill surfaces with a clean, water dampened soft cloth to remove excess perspiration. USE NO CHEMICALS.
WEEKLY: Use of a treadmill mat is recommended for ease of cleaning. Dirt from your shoes contacts the belt and eventually makes it to underneath the treadmill. Vacuum underneath treadmill once a week.
DECK LUBRICATION: The walking belt has been pre-lubricated at the factory. However, it is recommended that the walking board be checked periodically for lubrication to ensure optimal treadmill performance. Every 30 days or 30 hours of operation, lift the sides of the walking belt and feel the top surface of the walking board as far under as you can reach. If you feel signs of silicone, no further lubrication is required. If it feels dry to the touch, lubrication is needed. Keys Fitness recommends "Lube N Walk" for cleaning and lubricating the treadmill belt and deck. Ask your retailer or call Keys Fitness at 888-340-0482. You may also use silicone such as "Napa 8300" (available at most NAPA Auto Parts stores).
TO APPLY LUBRICANT TO THE WALKING BOARD
1) Position the walking belt so that the seam is located on top and in the center of the center of the walking board.
2) Insert the spray nozzle into the spray head of the lubricant can.
3) While lifting the side of the walking belt, position the spray nozzle between the walking belt and the board approximately 6" from the front of the treadmill. Apply the silicone spray to the walking board, moving from the front of the treadmill to the rear. Repeat this on the other side of the belt. Spray approximately 4 seconds on each side.
4) Allow the silicone to 'set' for one minute before using the treadmill.

WARNING: Do not over-lubricate the walking board. Excess lubricant should be wiped off with a clean towel.

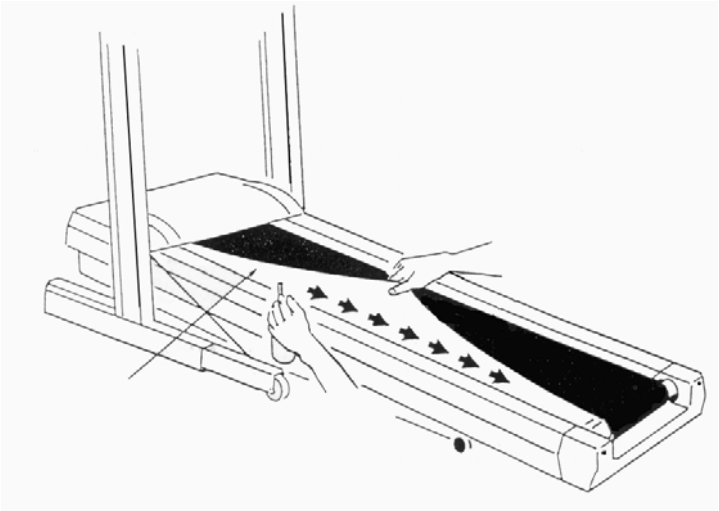

Download from Www.Somanuals.com. All Manuals Search And Download.

Treadmill Error Messages.

Your treadmill is equipped with a software package that enables error messages to be displayed when there is a problem. The following error codes will be displayed in the console display windows.

Safety Interlock Error Messages

SI 1 - Safety key missing, replace and try again.
SI 2 - Over voltage protection trip. Notify Keys Fitness Customer Service.

Other Error Messages

E11 - Lack of speed feedback data from belt motor. Attempt calibration. See Calibration Sequence section of this Owners Manual for detailed information.
E22 - Under Speed condition detected from the belt motor. Attempt calibration. See Calibration Sequence section for detailed information.
E33 - Over Speed condition detected from the belt motor. Attempt calibration. See Calibration Sequence section for detailed information.
E44 - Stuck key detected at power up, Notify Keys Fitness Customer Service.

To avoid possible damage to the treadmill and the possibility of injury, do not operate the treadmill until the problem is corrected. Call Keys Customer Service at 888-340-0482.

Download from Www.Somanuals.com. All Manuals Search And Download.

Treadmill will not start.

1. Is the **Safety Key** inserted into the treadmill Console?
2. Make sure the power cord is plugged into a surge protector, the surge protector is plugged into a properly grounded outlet, and the surge protector is turned on. (Refer to "Power Requirements" .)
3. Check the circuit breaker located on the front of the treadmill. If the switch protrudes, it has tripped. Wait five minutes and then press the switch back in.
4. Check the house electrical breaker box and the circuit breaker for the room where the treadmill is located. If it has tripped, reset or have an electrician replace the breaker in home.
5. Have an electrician check to insure there is adequate voltage at the outlet.

Treadmill loses power during use.

1. Check the circuit breaker located on the front of the treadmill. If the switch protrudes, it has tripped. Wait five minutes and then press the switch back in.
2. Check the house electrical breaker box and the circuit breaker for the room where the treadmill is located. If it has tripped, reset or have an electrician replace the breaker in home.
3. If the treadmill will not operate, please call Keys Fitness Customer Service at (888)-340-0482.

Treadmill walking belt slows during use.

1. Check to make sure the treadmill is securely plugged into an UL-listed surge protector, rated at 15 amps, with a 14-gauge cord of five feet or less and the surge protector is securely plugged into the outlet.
2. If treadmill will not operate, please call Keys Fitness Customer Service at (888)-340-0482.

Treadmill walking belt slips or is not centered on rear roller.

1. Refer to "Belt Adjustment" section.
2. Need help? Call Keys Fitness Customer Service at (888)-340-0482.

Treadmill Error Messages.

Your treadmill is equipped with a software package that enables error messages to be displayed when there is a problem.

To avoid possible damage to the treadmill and the possibility of injury, do not operate the treadmill until the problem is corrected. Call Keys Fitness Customer Service at (888)-340-0482, or see "Error Messages" on page 22 of this Owner's Manual.

Download from Www.Somanuals.com. All Manuals Search And Download.

Exploded View

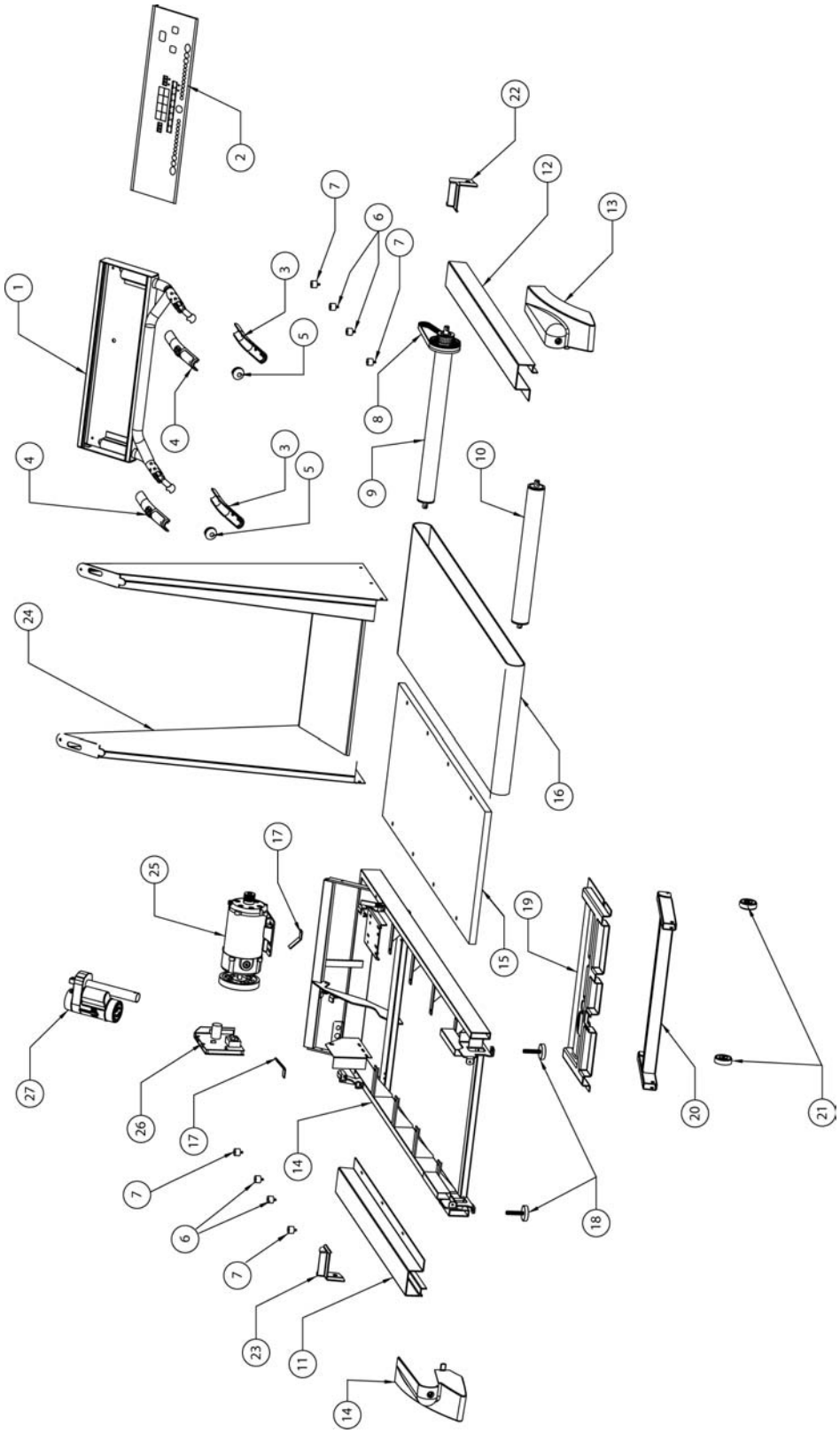

Download from Www.Somanuals.com. All Manuals Search And Download.

Keys 9000LI Treadmill

REF#	KEYS PART#	DESCRIPTION	QTY.
1	24-0279	CONSOLE ASSEMBLY KEYS9000 SERIES	1
2	14-0549	OVERLAY CONSOLE	1
3	06-0221	HANDGRIP BOTTOM RT CURVED	2
4	06-0219	HANDGRIP TOP RT SPEED CURVED	2
5	06-0005	PLUG-DOME 1.5 - 16GA	2
6	10-0002	ISOLATOR-BOARD 3/4" HARD	4
7	10-0057	ISOLATOR-BOARD 3/4" SOFT	4
8	04-0023	BELT POLY V 260J8	1
9	24-0106	FRONT ROLLER ASSEMBLY	1
10	09-0026	ROLLER REAR 2 1/2 X 21 1/8 2004	1
11	11-0054	ALUM SIDE BOARD LT EXT DECK	1
12	11-0053	ALUM SIDE BOARD RT EXT DECK	1
13	06-0238	END CAP RIGHT ID1 BOSS	1
14	06-0239	END CAP LEFT ID1 BOSS	1
15	03-0025	WALKBOARD 20.625 X 55.0625 REVISED	1
16	04-0041	WALKBELT 19.75 X 124.5" 1 PLY OVAL	1
17	19-0019	GUIDE- BELT-GLAVANIZED	2
18	10-0008	FOOT-REAR-KEYS SERIES	2
19	21-0161	INSIDE DRILL 06-0041 BTM PAN	1
20	23-0206	WIDER WHEEL ELEVATION	1
21	06-0247	WHEEL 3 1/2	2
22	06-0245	SIDE BOOT RT	1
23	06-0246	SIDE BOOT LT	1
24	23-0199	SHEET METAL UPRIGHT ASSEMBLY	1
25	12-0032	MOTOR BALDOR 3.0HP-SM9.3P	1
26	08-0050	CONTROLLER	1
27	12-0026	ACTUATOR- 600# BOSS	1

Keys 9000-OB Treadmill

REF#	KEYS PART#	DESCRIPTION	QTY.
1	24-0279	CONSOLE ASSEMBLY KEYS9000 SERIES	1
2	14-0549	OVERLAY CONSOLE	1
3	06-0221	HANDGRIP BOTTOM RT CURVED	2
4	06-0219	HANDGRIP TOP RT SPEED CURVED	2
5	06-0005	PLUG-DOME 1.5 - 16GA	2
6	10-0002	ISOLATOR-BOARD 3/4" HARD	4
7	10-0057	ISOLATOR-BOARD 3/4" SOFT	4
8	04-0023	BELT POLY V 260J8	1
9	24-0106	FRONT ROLLER ASSEMBLY	1
10	09-0027	ROLLER REAR 2.375 09-0026 FOR ORTHO BELT	1
11	11-0054	ALUM SIDE BOARD LT EXT DECK	1
12	11-0053	ALUM SIDE BOARD RT EXT DECK	1
13	06-0238	END CAP RIGHT ID1 BOSS	1
14	06-0239	END CAP LEFT ID1 BOSS	1
15	03-0025	WALKBOARD 20.625 X 55.0625 REVISED	1
16	04-0039	WALKBELT 19.75 X 124.5" QUIET ORTHO	1
17	19-0019	GUIDE- BELT-GLAVANIZED	2
18	10-0008	FOOT-REAR-KEYS SERIES	2
19	21-0161	INSIDE DRILL 06-0041 BTM PAN	1
20	23-0206	WIDER WHEEL ELEVATION	1
21	06-0247	WHEEL 3 1/2	2
22	06-0245	SIDE BOOT RT	1
23	06-0246	SIDE BOOT LT	1
24	23-0199	SHEET METAL UPRIGHT ASSEMBLY	1
25	12-0032	MOTOR BALDOR 3.0HP-SM9.3P	1
26	08-0050	CONTROLLER	1
27	12-0026	ACTUATOR- 600# BOSS	1

Download from Www.Somanuals.com. All Manuals Search And Download.

KEYS FITNESS PRODUCTS, LP - LIMITED WARRANTY

HOME USE WARRANTY:

	Frame:	Motor:	Deck & Belt:	Parts:	Labor:
PRODUCT: KEYS 9000-OB	Lifetime	Lifetime	5 Years	2 Years	1 Year
PRODUCT: KEYS 9000-LI	Lifetime	3 Years	1 Year	1 Year	1 Year

This Limited Warranty applies in the United States and Canada to products manufactured or distributed by Keys Fitness Products, LP ("Keys") under the KEYS brand name. The warranty period to the original purchaser is listed above in the table.

Keys warrants that the Product you have purchased for use from Keys or from an authorized Keys reseller is free from defects in materials or workmanship under normal use during the warranty period. Your sales receipt, showing the date of purchase of the Product, is your proof of purchase. This warranty only extends to you, the original purchaser. It is not transferable to anyone who subsequently purchases the Product from you. It excludes expendable parts (wear items). Wear items pertain to components that might need to be replaced due to normal wear and tear. These items vary per product but will include computer overlays, pedal straps, rope cords, seats, grips, chains, bottom bracket assemblies, pads, upholstery, pulleys, bearings, etc. Please contact a Keys Fitness customer service representative for specifics on wear items. This Limited Warranty becomes VALID ONLY if the product is purchased through a Keys Fitness authorized dealer unless otherwise authorized by Keys Fitness in writing.

During the warranty period Keys will repair or replace (at Keys' option) the product if it becomes defective, malfunctions, or otherwise fails to conform with this Limited Warranty under normal use. In repairing the Product, Keys may replace defective parts, or at the option of Keys, serviceable used parts that are equivalent to new parts in performance. All exchanged parts and Products replaced under this warranty will become the property of Keys. Keys reserves the right to change manufacturers of any part to cover any existing warranty.

This warranty DOES NOT COVER shipping charges, export taxes, custom duties and taxes, or any other charges associated with transportation of the parts or Product.

To obtain warranty service, you must contact a Keys authorized retailer, service technician or Keys Fitness at our phone numbers located in this manual. Any parts determined to be defective must be returned to Keys to obtain warranty service. You must prepay any shipping charges, export taxes, custom duties and taxes, or any other charges associated with transportation of the parts or Product. In addition, you are responsible for insuring any parts or Product shipped or returned. You assume the risk of loss during shipment. You must present Keys with proof-of-purchase documents (including the date of purchase). Any evidence of alteration, erasing or forgery of proof-of-purchase documents will be cause to void this Limited Warranty.

This warranty does not extend to any product not purchased from Keys or from an authorized Keys reseller. This Limited Warranty does not extend to any Product that has been damaged or rendered defective; (a) as a result of accident, misuse, or abuse; (b) by the use of parts not manufactured or sold by Keys; (c) by modification of the Product or normal wear and tear; (d) operation on incorrect power supplies; or (e) as a result of service by anyone other than Keys, or an authorized Keys warranty service provider. Product on which the serial number has been defaced or removed is not eligible for warranty service. Should any Product submitted for warranty service be found ineligible, an estimate of repair cost will be furnished and the repair will be made if requested by you upon Keys' receipt of payment or acceptable arrangements for payment.

EXCEPT AS EXPRESSLY SET FORTH IN THIS WARRANTY, KEYS MAKES NO OTHER WARRANTIES, EXPRESSED OR IMPLIED, INCLUDING ANY IMPLIED WARRANTIES OF MERCHANTABILITY AND FITNESS FOR A PARTICULAR PURPOSE. KEYS EXPRESSLY DISCLAIMS ALL WARRANTIES NOT STATED IN THIS LIMITED WARRANTY. ANY IMPLIED WARRANTIES THAT MAY BE IMPOSED BY LAW ARE LIMITED TO THE TERMS OF THIS LIMITED WARRANTY. NEITHER KEYS NOR ANY OF ITS AFFILIATES SHALL BE RESPONSIBLE FOR INCIDENTAL OR CONSEQUENTIAL DAMAGES. SOME STATES DO NOT ALLOW LIMITATIONS ON HOW LONG AN IMPLIED WARRANTY LASTS OR THE EXCLUSION OR LIMITATION OF INCIDENTAL OR CONSEQUENTIAL DAMAGES, SO THE ABOVE LIMITATIONS OR EXCLUSION MAY NOT APPLY TO YOU. This Limited Warranty gives you specific legal rights and you may also have other rights that may vary from state to state. This is the only express warranty applicable to Keys-branded products. Keys neither assumes nor authorizes anyone to assume for it any other express warranty.

PLEASE SEND IN THE WARRANTY CARD WITHIN TEN (10) DAYS OF PURCHASE TO REGISTER YOUR UNIT WITH KEYS FITNESS PRODUCTS, LP.
MAIL WARRANTY CARD TO:
KEYS FITNESS PRODUCTS, PO BOX 551239, DALLAS, TX 75355

Download from Www.Somanuals.com. All Manuals Search And Download.

Customer Service
(888) 340-0482

Keys Fitness Products
4009 Distribution Drive
Suite 250
Garland, TX 75041

www.keysfitness.com

Download from Www.Somanuals.com. All Manuals Search And Download.

Free Manuals Download Website

http://myh66.com

http://usermanuals.us

http://www.somanuals.com

http://www.4manuals.cc

http://www.manual-lib.com

http://www.404manual.com

http://www.luxmanual.com

http://aubethermostatmanual.com

Golf course search by state

http://golfingnear.com

Email search by domain

http://emailbydomain.com

Auto manuals search

http://auto.somanuals.com

TV manuals search

http://tv.somanuals.com