# INSTRUCTION BOOK

**MINI SYSTEM DIGITAL AM/FM 5 CD CHANGER**
**DUAL CASSETTE RECORDER**
**WITH TURNTABLE AND REMOTE CONTROL**

# MODEL: MX5510

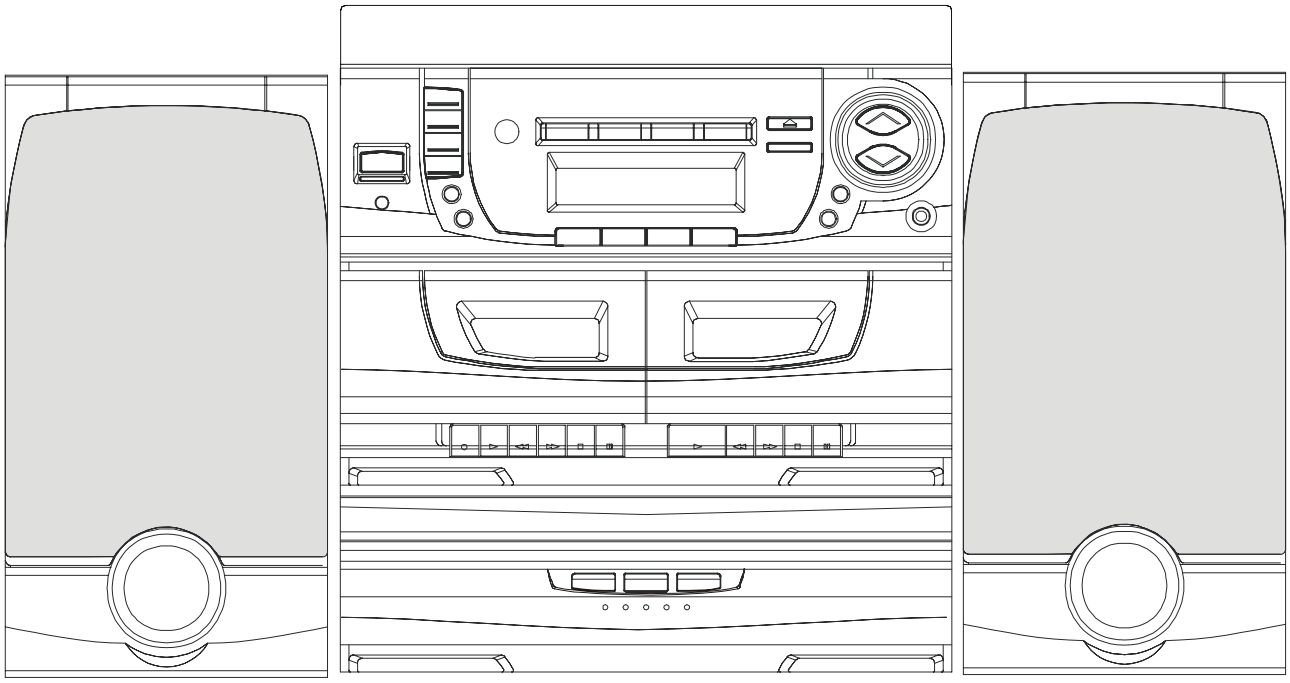

**BEFORE OPERATING THIS PRODUCT,**
**PLEASE READ THESE INSTRUCTIONS COMPLETELY**

Download from Www.Somanuals.com. All Manuals Search And Download.

**CAUTION**

RISK OF ELECTRIC SHOCK
DO NOT OPEN

CAUTION: TO PREVENT THE RISK OF ELECTRIC SHOCK, DO NOT REMOVE COVER (OR BACK).
NO USER-SERVICEABLE PARTS INSIDE.
REFER SERVICING TO QUALIFIED SERVICE PERSONNEL.

WARNING: TO PREVENT FIR OR SHOCK HAZARD, DO NOT EXPOSE THIS APPLIANCE TO RAIN OR MOISTURE.

This symbol indicates that dangerous voltage constituting a risk of electric shock is present within this unit.

This symbol indicates that there are important operating and maintenance instructions in the literature accompanying this unit.

WARNING: UNAUTHORIZED RECORDING OF COPYRIGHTED MATERIAL MAY VIOLATE APPLICABLE COPYRIGHT LAWS, MANUFACTURER ASSUMES NO RESPONSIBILITY FOR UNAUTHORIZED DUPLICATION, USE OR OTHER ACTS WHICH INFRINGE UPON THE RIGHT S OF COPYRIGHT OWNERS.

## Explanation of Symbols

This symbol is intended to alert the user of the presence of uninsulated "dangerous voltage" within the product encasement that may be of sufficient magnirude to constitute a risk of electric shock to persons.

This symbol is intended to alert the user of the presence of important operating and maintenance (servicing) instructions in the literature accompanying the appliance.

WARNING

To prevent fire or shock hazard, do not expose this appliance to rain or moisture.
If this happens, make sure the power to the electrical outlet is turned off before.

## SAFETY CERTIFICATION

This unit is made and tested to meet exacting safety standards. It meets UL and FCC requirements and complies with safety performance standards of the U.S Department of Health and Human Services.

CAUTION - USE OF CONTROLS OR ADJUSTMENTS OR PERFORMANCE OF PROCEDURES OTHER THAN THOSE SPECIFIED HEREIN MAY RESULT IN HAZARDOUS RADIATION EXPOSURE.

THIS UNIT SHOULD NOT BE ADJUSTED OR REPAIRED BY ANYONE EXCEPT PROPERLY QUALIFIED SERVICE PERSONNEL.

FCC INFORMATION
For CD player section:
This device complies with Part 15 of the FCC Rules.
Operation is subject to the following two conditions:
(1) This device may not cause harmful interference, and (2) this device must accept any interference received, including interference that may cause undesired operation.

NOTE:
This equipment has been tested and found to comply with the limits for a Class B digital device, pursuant to Part 15 of the FOC Rules. These limits are designed to provide reasonable protection against harmful interference in a residential installation. This equipment generates, uses and can radiate radio frequency energy and, If not installed and used in accordance with the Installed and used in accordance with the Instructions, may cause harmful interference to radio communications. However, there is no guarantee that interference will not occur in a particular installation. If this equipment does cause harmful interference to radio or television reception, which can be determined by turning the equipment off and on, the user is encouraged to try to correct the interference by one or more of the following measures:

- Relocate the receiving antenna.
- Increase the separation between the equipment and receiver.
- Connect the equipment into outlet on a circuit different from that to which the receiver is connected.
- Consult the dealer or an experienced radio/TV technician for help.

Download from Www.Somanuals.com. All Manuals Search And Download.

1.Read Instructions - All the safety and operating instructions should be read before the appliance is operated.

2.Retain Instructions - The safety and operating instructions should be retained for future reference.

3.Heed Warning - All warnings on the appliance and in the operating instructions should be followed.

Safety Instructions
Do not operate the unit from any power scurce except that indicated on the stereo or in the owner's manual.

Do not install the unit near or over a radiator,or other heat sources.

Do not mount the unit to a wall or ceiling except as recommended by the manufacturer.

Do not place the unit in a built-in enclosure such as a bookcase or cabinet, unless proper ventllation is provided.

Do not block the ventilation openings of the unit by placing it on a bed, soft, rug, etc.

Do not allow objects to fall or liquids to spill into the unit through the openings.

Do not use the unit near water, such as bath tub, washbowl, sink, laundry tub, swimming pool, etc.
Do not allow anything to rest on, roll over, or pinch the power cord, or place the power cord where it is subject to traffic or abuse; this may result in a fire hazard.

Do not use a cart or stand not recommended by the manufacturer.

Do not try to roll cart with small castors across thresholds or deep pile carpets. Quick stops, excessive force, and uneven surfaces may cause the unit and cart combination to overturn.

Do not clean the unit except as described in the owner's manual.

Do not attempt to service the unit beyond that described in the owner's manual: all other servicing should be referred to qualified service personnel.

Do not leave the unit on when unattended; a malfunction may result in a fire hazard.

NOTE: For added protection during a lightning storm or whenever the unit will be left unattended for a long period of time, disconnect the power source.

Have The Unit Serviced
If — — — — — — — — — —
--the power cord or the plug has been damaged.

--objects have fallen, or liquid has been spilled onto the unit.

--the unit has been exposed to rain or excessive molsture.

--the unit does not appear to operate normally or exhibits a marked change in performance.

--the unit has been dropped or the encasement damaged.

**Example of Antenna Grounding as per NEC - National Electric Code**

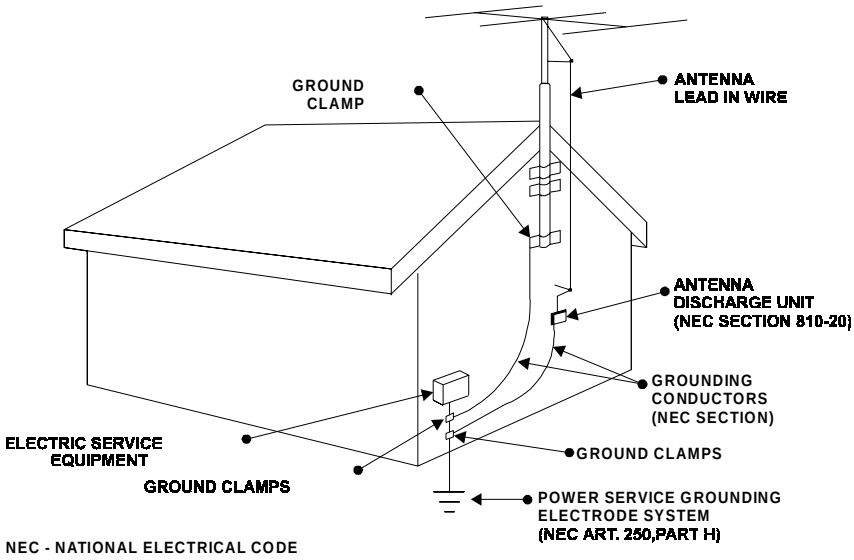

Download from Www.Somanuals.com. All Manuals Search And Download.

# TABLE OF CONTENTS

**INSTALLATION**.....**2~5**
Accessories.....2
Positioning Your Main Unit.....2
Rear Panel Connections.....3
Connecting the Speakers.....4
Connecting Optional Equipment.....5

**FUNCTIONAL OVERVIEW**.....**6~11**
Front Panel.....6 - 8
LCD Display.....9
Remote Control.....10-11

**AMPLIFIER**.....**12**
General.....12

**TIMER SETTING** .....**12~13**
Clock Setting.....12
Time On/Off Setting.....12-13
Sleep Timer.....13

**TURNTABLE/ PHONO**.....**14**

**CD CHANGER**.....**15~17**
Loading Disc Into The CD Tray.....15
Disc Status.....15
Normal CD Playback.....15
CD Random Playback.....16
CD Repeat Playback.....16
Displaying Time Information.....16-17
CD Program ( CD Memory ).....17

**TAPE PLAYER**.....**18~19**
Loading One Tape.....18
Normal Playback ( Deck A and Deck B ).....18
Recording ( Deck A ).....18-19
Sequential Playback ( Deck B to Deck A).....19

**TUNER**.....**20**
Auto (automatic)/Manual Tuning.....20
Preset Memory.....20

**GENERAL INFORMATION**.....**21**
Troubleshooting.....21
System Specifications.....22



Download from Www.Somanuals.com. All Manuals Search And Download.

# INSTALLATION

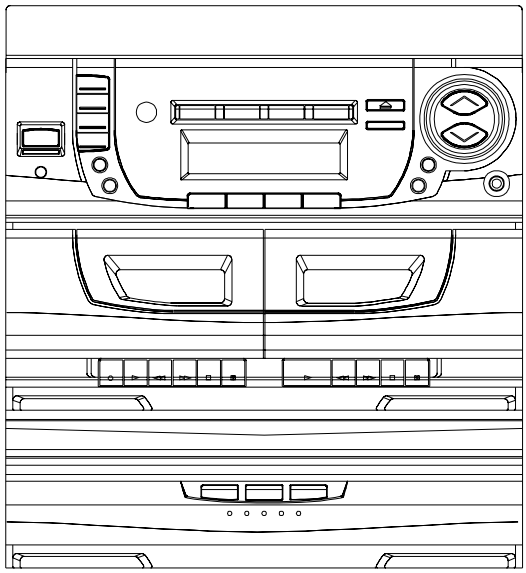

MAIN UNIT

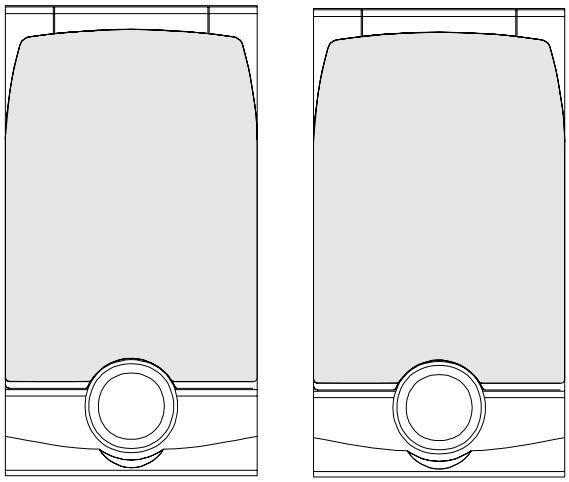

Front Left/Right Speakers

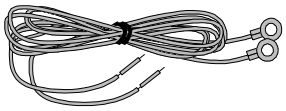

FM Antenna

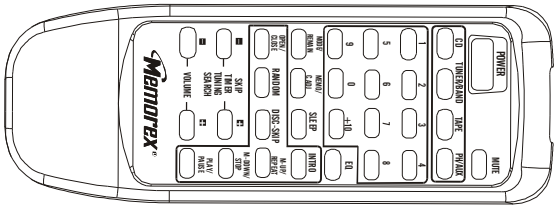


REMOTE CONTROL

## ACCESSORIES

This package contains:
- 1 Main Unit
- 2 Front Speakers
- 1 FM Antenna
- 1 Remote Control
- 1 Instruction book

## POSITIONING YOUR MAIN UNIT

Place the unit on stable, level surface, out of direct sunlight and away from sources of excessive dust, dirt, heat, water, moisture, vibration and strong magnetic fields.

Do not connect the unit to the AC power supply until all other connections have been made and the AC voltage (indicated on the type plate on the back cover) has been checked.

When positioning the unit, bear in mind that every receiver produces heat which must be able to dissipate freely. For this reason do not cover any vents and make sure that there is sufficient ventilation around the unit.

Always remove all CDs from the changer before moving the system.


Download from Www.Somanuals.com. All Manuals Search And Download.

# INSTALLATION

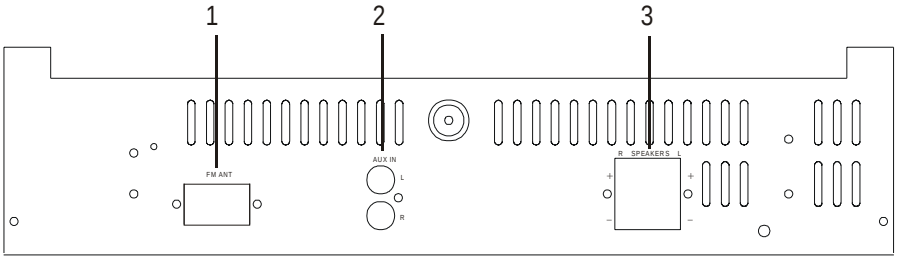


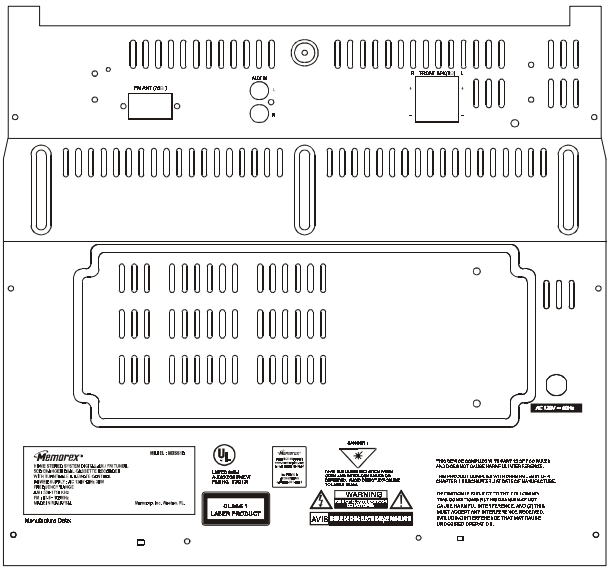

## REAR PANEL CONNECTIONS

**1. FM ANTENNA (FM 300 ohm)**
For connecting the 300 ohm antenna supplied.

**2. AUX IN (L/R)**
For connecting optional video equipment.

**3. FRONT SPEAKERS (4 OHM)**
Connect supplied left and right front speakers here.

**4. AC POWER CORD**
Plug into a standard 120V/60Hz household wall outlet.

## CONNECTING THE FM ANTENNA

Plug the FM antenna to the FM terminal of the main unit.

## ANTENNA OR SPEAKER WIRE CONNECTION TO TERMINALS

***NOTE:*** *Push and hold speaker terminal tab down to insert wire. Release tab to lock wire in terminal. Make sure the insulation is completely removed from the ends of the antenna and speaker wires at all connection points.*

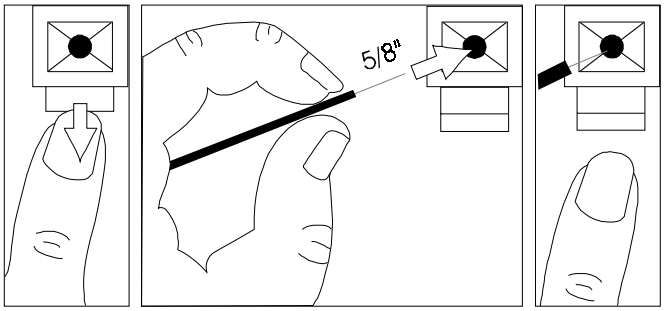




Download from Www.Somanuals.com. All Manuals Search And Download.

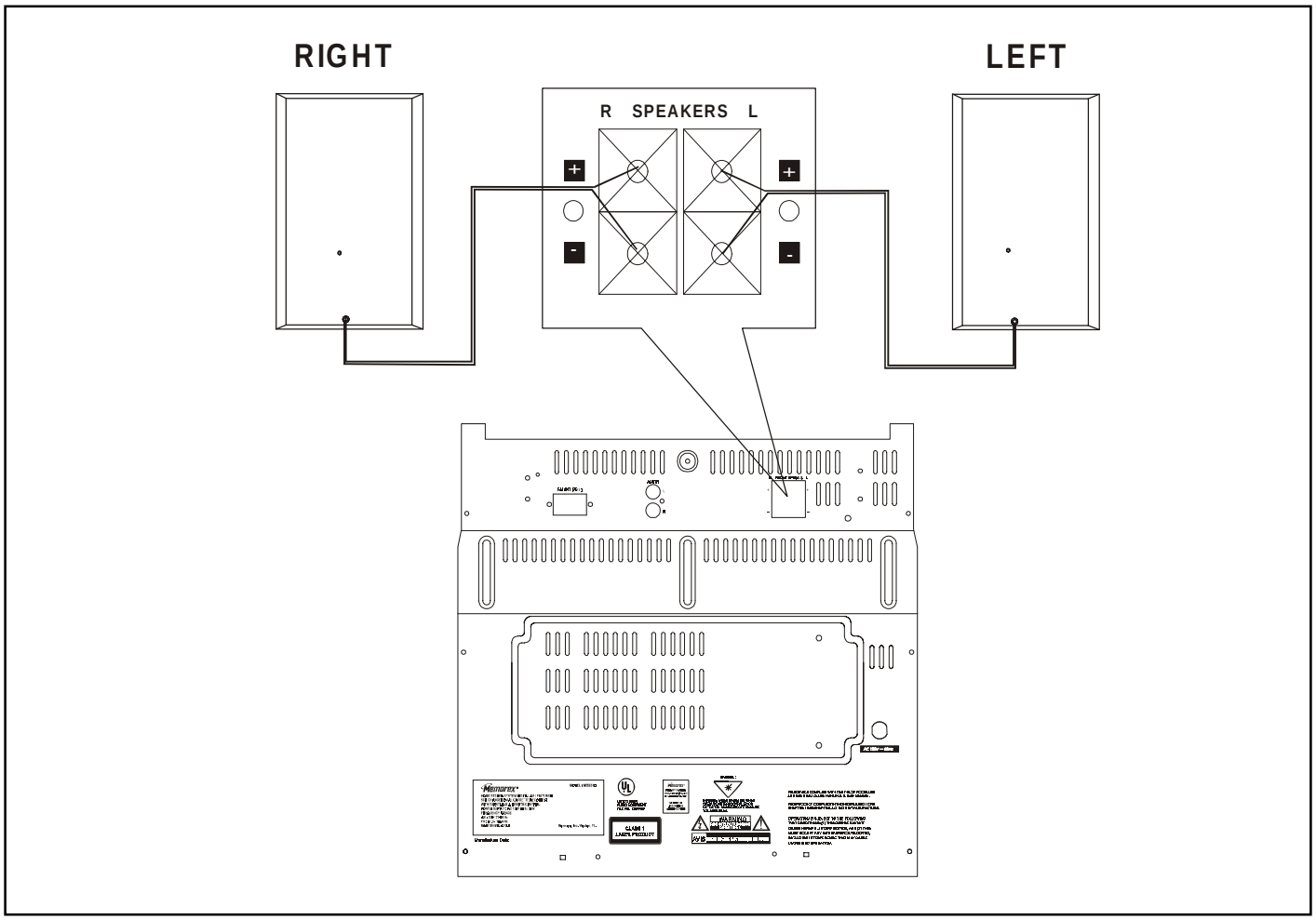


## CONNECTING THE SPEAKERS

**Connecting the Front Speakers**

Connect the right front speaker to the front speaker ²R² terminal on the back of the main unit, and the left front speaker to the front speaker ²L² terminal.

Make sure the (+) (red) and (-) (black and red) cables are connected to the correct front speaker terminals [(+) to (+) and (-) to (-)].



Download from Www.Somanuals.com. All Manuals Search And Download.

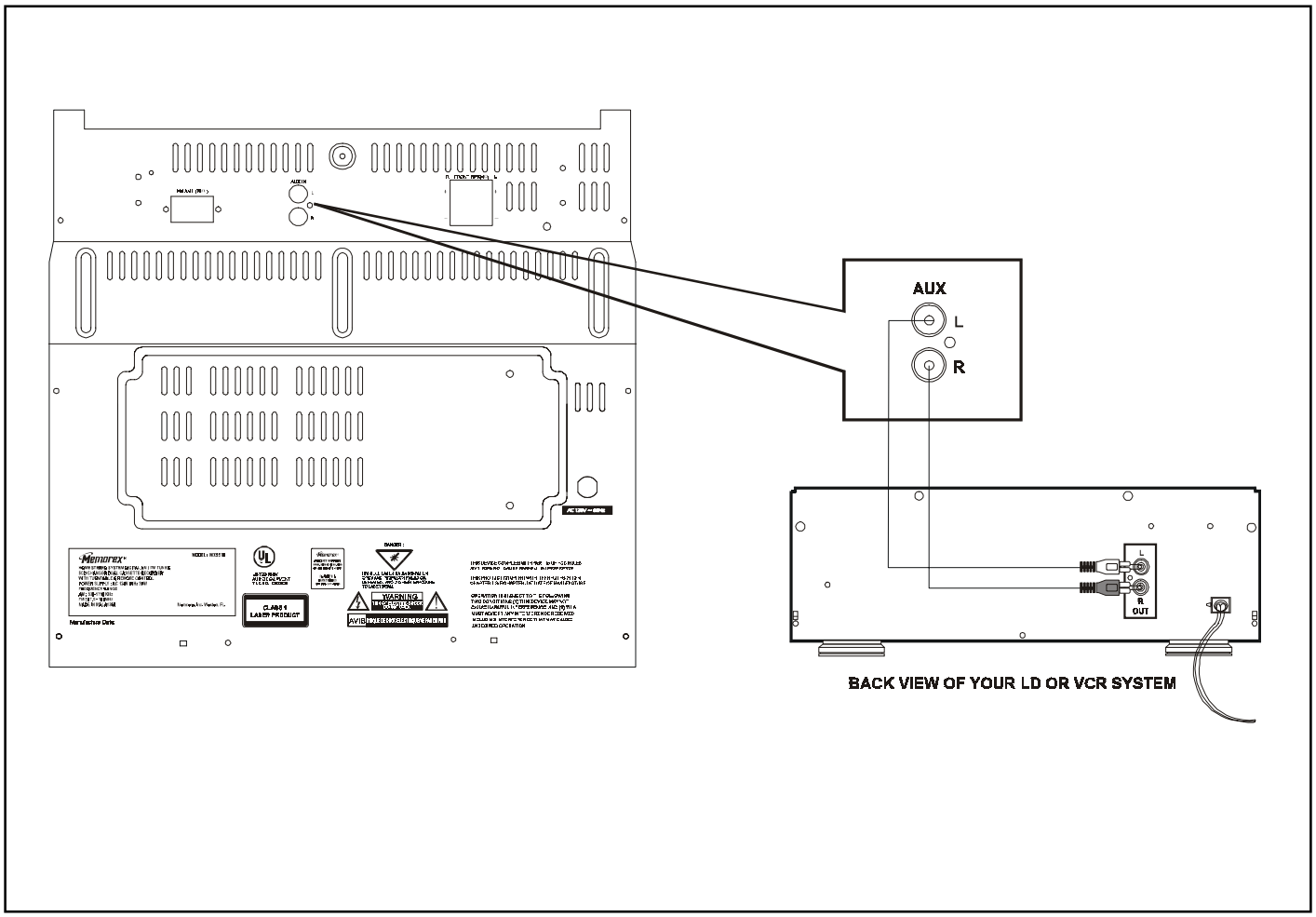


## CONNECTING OPTIONAL EQUIPMENT

### Connecting a Video system

Connect the ²L ²and ²R ²Audio output terminals of your laser disc or VCR system to the ²L ²and ²R ²VIDEO INPUT terminals of the main unit.



Download from Www.Somanuals.com. All Manuals Search And Download.

# FUNCTIONAL OVERVIEW

## FRONT PANEL

## FRONT PANEL

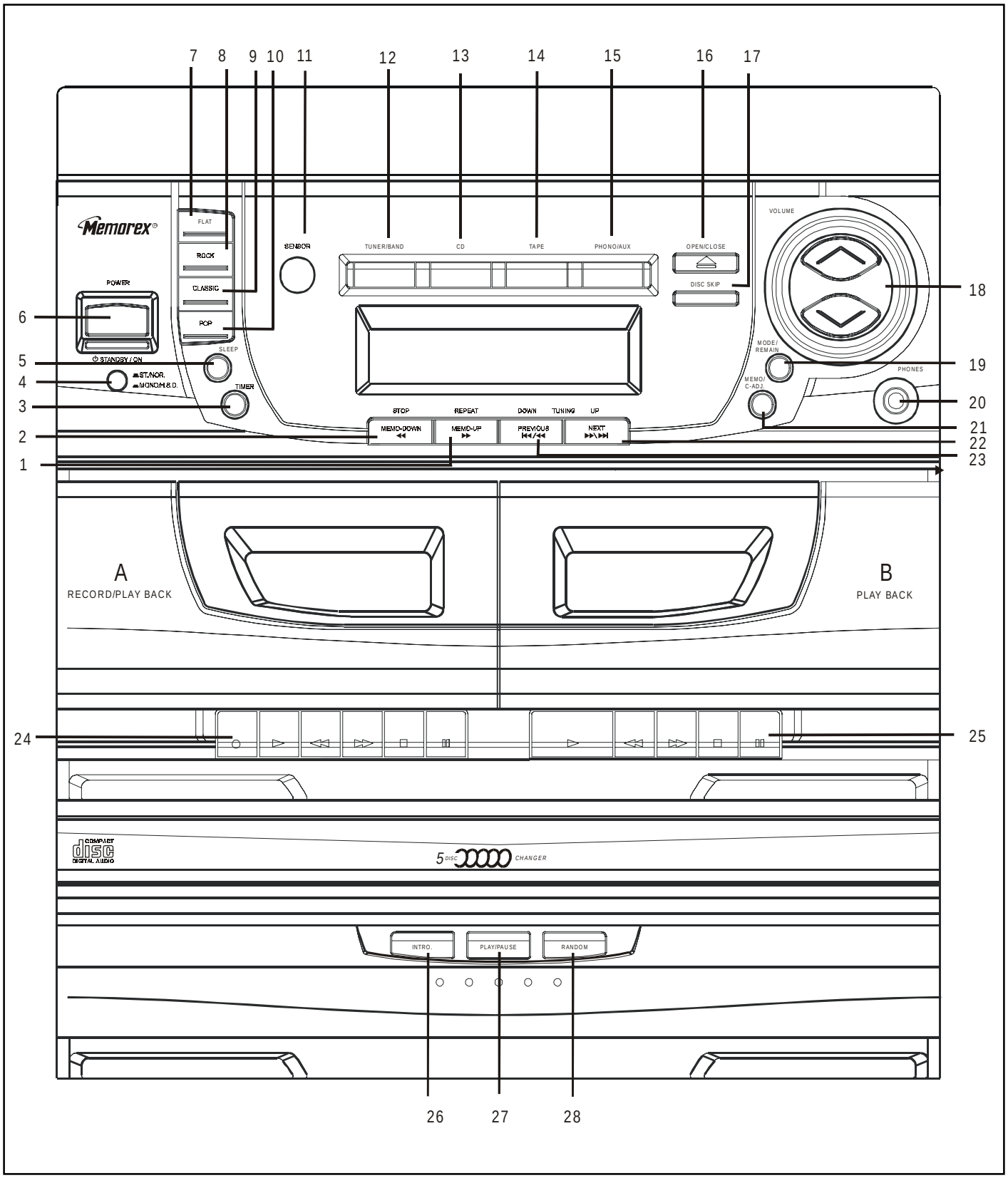




Download from Www.Somanuals.com. All Manuals Search And Download.

# FUNCTIONAL OVERVIEW

## FRONT PANEL

**1. REPEAT / MEMO • UP**

•In CD mode, press to change the following repeat play mode : All disc, Rpeat all disc, Repeat one disc, Repeat one track.

•In TUNER mode, press to display the preset memory in ascending order.

**2. STOP / MEMO • DOWN**

•In CD mode, press to stop CD playing and exit CD memory registration mode. When CD is stoped, press this key to clear CD memory.

•In TUNER mode, press to display the preset memory in descending order.

**3. TIMER**

Press to set timer on or off. When timer is on, will illuminate.

**4. ST. / NOR & MONO. / H.S.D.**

•In TAPE RECORD mode, press to select normal mode or to increase the TAPE recording speed to twice the normal recording speed.

•In FM mode, press to select either STEREO sound or MONO sound.

**5. SLEEP**

Press to select the SLEEP timer on or off. Keep pressing this key to set the sleep time from 00 to 90 minutes.

**6. POWER**

Press the POWER button to switch the main power of the unit to ON or STANDBY.

**7. FLAT**

Press to select FLAT sound mode.

**8. ROCK**

Press to select ROCK sound mode.

**9. CLASSIC**

Press to select CLASSIC sound mode.

**10. POP**

Press to select POP sound mode.

**11. SENSOR**

Infrared rays sensor, to receive the information transmitted from the remote control.

## FRONT PANEL

**12. TUNER / BAND**

•Not in TUNER mode, press to set TUNER mode.

•In TUNER mode, press to change the receiving BAND between FM and AM

**13. CD**

•Not in CD mode, press to set CD mode.

•In CD mode, it has the same function as the DISC SKIP key. Press to set or skip to next valid disc in ascending order.

**14. TAPE**

Press to select the function of TAPE.

**15. PHONO / AUX**

Press to select the PHONO function or the AUX input source. Both PHONO and AUX are mixing-channels. You can mix sounds if you play the PHONO and input another signal from the AUX at the same time.

**16. OPEN / CLOSE**

Press to open or close the CD door

**17. DISC SKIP**

•In CD memory set mode, press to set to next valid disc number in ascending order.

•In CD normal play or stop mode,press to skip to next valid disc in ascending order.

•Not in CD mode, press to skip to next valid disc in ascending order when the door is open.

**18. VOLUME**

Press the VOLUME button to adjust the volume level up or down.

**19. MODE / REMAIN**

•In TUNER mode, press to change the following display : Band and Frequency, Time display.

•In CD normal play mode, press to change the following display : Each playing time, Each remaining time, Total remaining time, Total playing time, Time display.

•In CD random play mode, press to change the following display : Each playing time, Each remaining time, Time display.

•In CD memory play mode, press to change the following display : Each playing time, Each remaining time, Program number, Time display.

•In CD stop mode, press to change the following display : All time display, Time display.

•In TAPE or AUX mode, press to change the following display : AUX or TAPE, Time display.

***NOTE:*** *The above **Time display** includes: Clock display, Time ON, Time OFF.*



Download from Www.Somanuals.com. All Manuals Search And Download.

## FRONT PANEL

**20. PHONES**

Plug headphones into this jack. Press the volume button to adjust the sound level.

**21. MEMO / C-ADJ.**

- In TUNER mode, press to store AM/FM stations in the memory locations.
- In CD mode, press to do CD program in memory locations.
- In clock adjust mode, press to set clock or timer adjustment.

**22. TUNING • UP / NEXT**

- In TUNER mode, press less than 0.5 second to do manual tuning in ascending order.
- In TUNER mode, press longer than 0.5 second to do auto tuning in ascending order.
- In CD mode, press less than 0.5 second to move track in ascending order.
- In CD mode, when CD is playing, press longer than 0.5 second to search in ascending order.
- In clock or timer adjusting mode, press to adjust clock time in ascending order.

**23. TUNING • DOWN / PREVIOUS**

- In TUNER mode, press less than 0.5 second to do manual tuning in descending order.
- In TUNER mode, press longer than 0.5 second to do auto tuning in descending order.
- In CD mode, press less than 0.5 second to move track in descending order.
- In CD mode, when CD is playing, press longer than 0.5 second to search in descending order.
- In clock or timer adjusting mode, press to adjust clock time in descending order.

**24. [ DECK A ] CASSETTE FUNCTION KEYS**

- ● **RECORD** ..... Press to activate cassette recording.
- ▶ **PLAY** ..... Press to activate cassette playing.
- ◀◀ **REWIND** ..... Press to activate cassette rewinding.
- ▶▶ **F. FWD.** ..... Press to activate cassette fast forwarding.
- ■ **STOP / EJECT** .. Press once to stop play, rewind or fast forward. Press a second time to eject the cassette.
- ❚❚ **PAUSE** ..... Press to pause playback.

## FRONT PANEL

**25. [ DECK B ] CASSETTE FUNCTION KEYS**

- ▶ **PLAY** ..... Press to activate cassette playing.
- ◀◀ **REWIND** ..... Press to activate cassette rewinding.
- ▶▶ **F. FWD.** ..... Press to activate cassette fast forwarding.
- ■ **STOP / EJECT** ... Press once to stop play, rewind or fast forward. Press a second time to eject the cassette.
- ❚❚ **PAUSE** ..... Press to pause playback.

**26. INTRO**

Press to set or release the intro scan play mode in CD mode.

**27. PLAY / PAUSE**

Press to begin playback of the CD and press again to pause CD playback.

**28. RANDOM**

Press to toggle CD random play mode. The RANDOM indicator appears on the display and tracks on all discs are played in random order. When the last track of the last disc is played, the system will automatically stop, unless you have selected REPEAT mode.



Download from Www.Somanuals.com. All Manuals Search And Download.

# FUNCTIONAL OVERVIEW

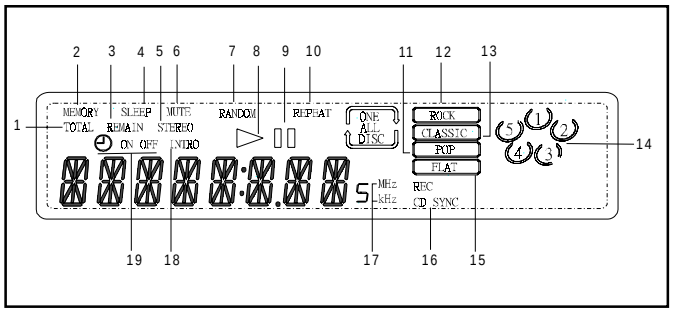


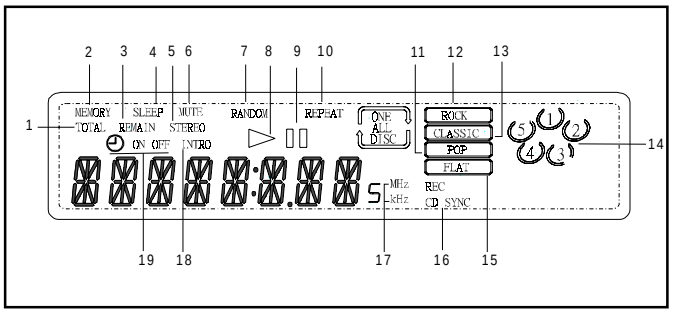


## LCD DISPLAY

**1. TOTAL**
Illuminates if you select the total remain time or total time in CD normal play mode.

**2. MEMORY**
Illuminates if any track or station has been stored to a CD program or tuner memory in CD mode or TUNER mode.

**3. REMAIN**
Illuminates if you select the each remain time or total remain time in CD play mode.

**4. SLEEP**
Illuminates if you select the SLEEP function.

**5. STEREO**
Illuminates if a stereo singal is received in tuner mode.

**6. MUTE**
Illuminates if you select the MUTE function.

**7. RANDOM**
Illuminates if you select the random play function in CD mode.

**8. ▶**
Illuminates during CD playback mode.

**9. ❚❚**
Illuminates when CD playback has been paused.

**10. REPEAT**
Illuminates if you select the repeat play function in CD mode.

**11. POP**
Illuminates if the POP EQ mode is selected.

**12. ROCK**
Illuminates if the ROCK EQ mode is selected.

## LCD DISPLAY

**13. CLASSIC**
Illuminates if the CLASSIC EQ mode is selected.

**14. DISC NUMBER**
Illuminates if the corresponding tray has disc in CD mode.

**15. FLAT**
IIluminates if the FLAT EQ mode is selected.

**16. REC CD SYNC**
Illuminates if the CD-SYNC tape recording function has been selected.

**17. MHz/KHz**
Illuminates while the FM or AM station has been selected in TUNER mode.

**18. INTRO**
Illuminates if you select the INTRO play function in CD mode.

**19. ON / OFF**

will illuminate if the Timer is on by pressing the TIMER button on the remote to select.

**ON** will flash if Time ON function is selected by pressing the MODE / REMAIN button on the remote repeatedly.
**OFF** will flash if Time OFF function is selected by pressing the MODE / REMAIN button on the remote control repeatedly.


Download from Www.Somanuals.com. All Manuals Search And Download.

# FUNCTIONAL OVERVIEW

## REMOTE CONTROL

REMOTE CONTROL

**INSTALLING BATTERIES:**

1. Remove the battery cover from the back of the remote.

2. Insert 2 *AA* batteries into the remote, paying careful attention to the polarity diagram (+ / -) on the battery compartment cover.

3. Replace the battery cover.

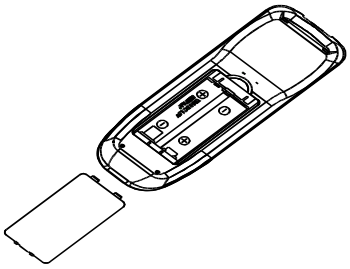

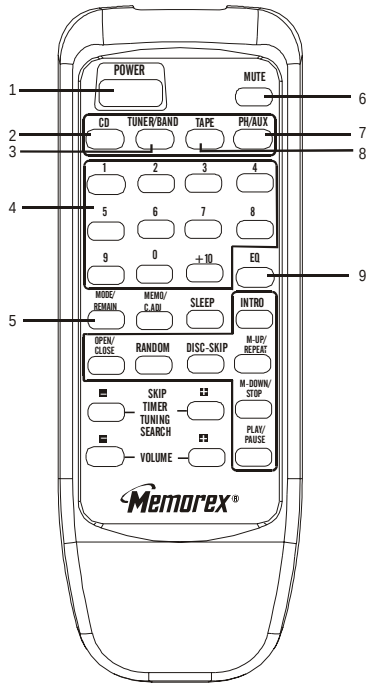


**1. POWER**
Press the POWER button to switch the main power of the unit to ON or STANDBY.

**2. CD**
- If not in CD mode, press to set CD mode.
- In CD mode, it has the same function as the DISC SKIP key. Press to set or skip to next valid disc in ascending order.

**3. TUNER/BAND**
- If not in TUNER mode, press to set TUNER mode.
- In TUNER mode, press to change the receiving BAND between FM and AM.

**4. 0 - 9 / +10**
- In CD mode, press to select favorite track.
- In TUNER mode,press to select favorite preset station.

**5. MODE / REMAIN**
- In TUNER mode, press to change the following display : Band and Frequency, Time display.
- In CD normal play mode, press to change the following display : Each playing time, Each remaining time, Total remaining time, Total playing time, Time display.
- In CD random play mode, press to change the following display : Each playing time, Each remaining time, Time display.
- In CD memory play mode, press to change the following display: Each playing time, Each remaining time, Program number, Time display.
- In CD stop mode, press to change the following display : All time display, Time display.
- In TAPE or AUX mode, press to change the following display : AUX or TAPE, Time display.

**6. MUTE**
Press to cancel sound. Press again to return the sound to its previous level. The MUTE indicator will illuminate when the MUTE function is on.

**7. PH. / AUX**
Press to select the PHONO function or the AUX input source. Both PHONO and AUX are mixing channels. You can mix sounds if you play the PHONO and input another signal from the AUX at the same time.

**8. TAPE**
Press to select the function of TAPE.

**9. EQ**
Press EQ button repeatedly to select ROCK, CLASSIC, POP or FLAT EQ setting and the adjacent indicator will illuminate.



Download from Www.Somanuals.com. All Manuals Search And Download.

# FUNCTIONAL OVERVIEW

## REMOTE CONTROL

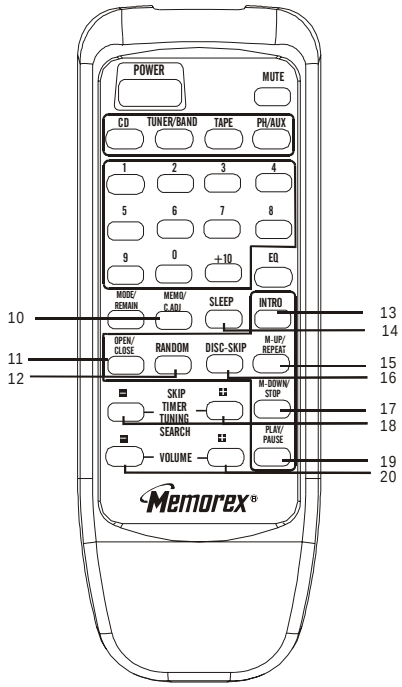


***NOTE:*** *The above* ***Time display*** *includes: Clock display, Time ON, Time OFF.*

**10. MEMO / C-ADJ.**

•In TUNER mode, press to store AM/FM stations in the memory locations.

•In CD mode, press to do CD program in memory locations.

•In clock adjust mode, press to set clock or timer adjustment.

**11. OPEN / CLOSE**

Press to open or close the CD door.

**12. RANDOM**

Press to toggle CD random play mode. The RANDOM indicator appears on the display and tracks on all discs are played in random order. When the last track of the last disc is played, the system will automatically stop, unless you have selected REPEAT mode.

**13. INTRO**

Press to set or release the intro scan play mode in CD mode.

## REMOTE CONTROL

**14. SLEEP**

Press to select the SLEEP timer on or off. Keep pressing this key to set the sleep time from 00 to 90 minutes

**15. M-UP / REPEAT**

•In CD mode, press to change the following repeat play mode : All disc, Repeat all disc, Repeat one disc, Repeat one track.

•In TUNER mode, press to call the preset memory in ascending order..

**16. DISC SKIP**

•In CD memory set mode, press to set to next valid disc number in ascending order.

•In CD normal play or stop mode,press to skip to next valid disc in ascending order.

•Not in CD mode, press to skip to next valid disc in ascending order when the door is open.

**17. STOP / DOWN**

•In CD mode, press to stop CD playing and exit CD memory registration mode. When CD is stoped, press this key to clear CD memory.

•In TUNER mode, press to display the preset memory in descending order.

**18. SKIP (-) or (+)**

•In TUNER mode, press less than 0.5 second to do manual tuning.

•In TUNER mode, press longer than 0.5 second to do auto tuning.

•In CD mode, press less than 0.5 second to move track up or down.

•In CD mode, when CD is playing, press longer than 0.5 second to search up or down.

•In clock or timer adjusting mode, press to adjust clock time.

**19. PLAY/PAUSE**

Press to begin playback of the CD and press again to pause CD playback.

**20. VOLUME (-) or (+)**

Press (**+**) or (**-**) button to adjust the sound level up or down.



Download from Www.Somanuals.com. All Manuals Search And Download.

# AMPLIFIER

## GENERAL

1. Press the POWER button to turn the system on.

2. Select the source by pressing the desired source selector button:
   •Press the TUNER button to listen to a radio station.
   •Press the TAPE button for audio cassette.
   •Press the CD button to listen to a compact disc.
   •Press the PHONO / AUX button to select phonograph function or for a laser disc player, camcorder or VCR, etc...

3. Press the VOLUME button on the front panel or on the remote control to adjust the volume level up or down.

4. Press the EQ button repeatedly to select a preset equalizer mode: ROCK , CLASSIC, POP or FLAT.

***NOTE:*** *The Graphic Equalizer separates and adjusts the bass, midrange and treble levels. These preset selections adjust the sound to simulate and enhance the acoustical effects of ROCK, CLASSIC, POP or FLAT.*

5. Press the MUTE button to cancel the sound. The MUTE indicator will illuminate. Press again to return to original sound level.

# TIMER SETTING

## CLOCK SETTING

1. Turn the system on and press the MODE / REMAIN button until the clock appears in the display.

2. Press the MEMO / C-ADJ button one time and hour digit will flash .Then press the TUNING • DOWN / PREVIOUS or TUNING • UP / NEXT button until the correct hour digit appears.

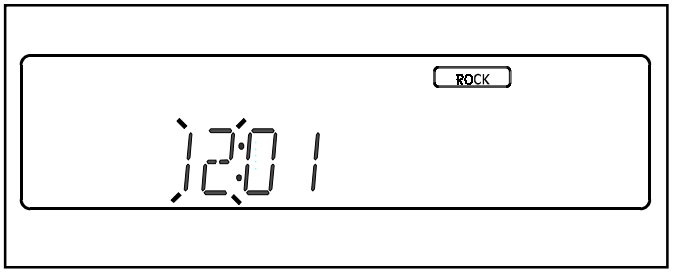


3. Press the MEMO / C-ADJ button again and minute digit will flash. Then press the TUNING • DOWN / PREVIOUS or TUNING • UP / NEXT button until the correct minute digit appears.

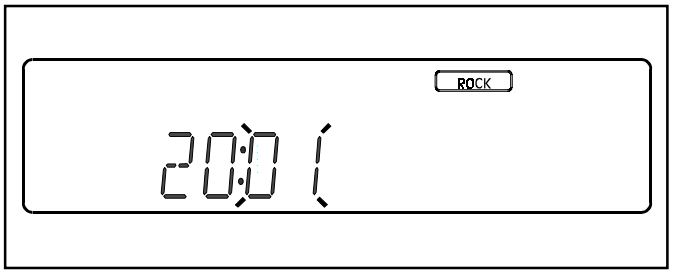


## TIME ON / OFF SETTING

Your music center can automatically turn itself on or off when the on or off time arrives.

### TIME ON SETTING

1. Turn the system on and press the MODE / REMAIN button until the Time ON appears.


Download from Www.Somanuals.com. All Manuals Search And Download.

2. Press the MEMO / C-ADJ button one time and hour digit will flash. Then press the TUNING • DOWN / PREVIOUS or TUNING • UP / NEXT button until the correct hour digit appears.

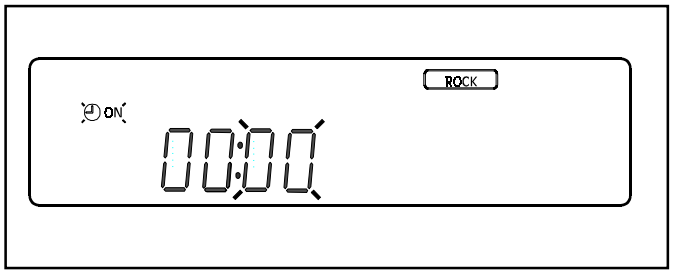


3. Press the MEMO / C-ADJ button again and minute digit will flash. Then press the TUNING • DOWN / PREVIOUS or TUNING • UP / NEXT button until the correct minute digit appears.

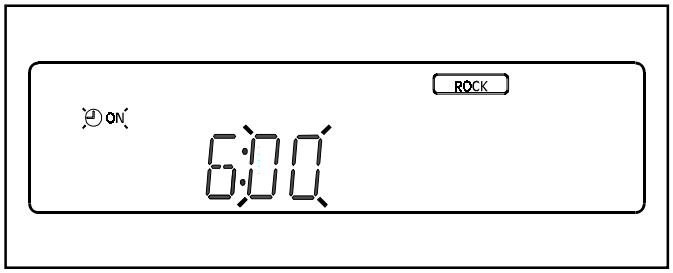


**TIME OFF SETTING**

1. Press the MODE / REMAIN button until the Time OFF appears.

2. Press the MEMO / C-ADJ button one time and hour digit will flash. Then press the TUNING • DOWN / PREVIOUS or TUNING • UP / NEXT button until the correct hour digit appears.

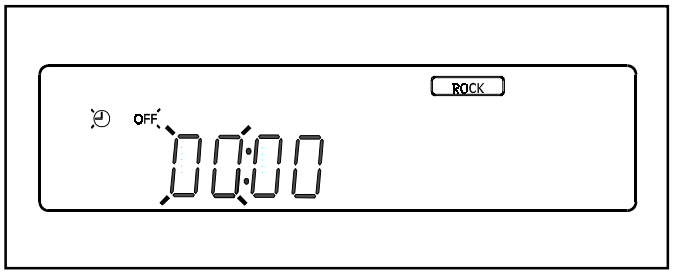


**NOTE**: Make sure **TIMER** appears in the top left corner. If **TIMER** dose not appear on LCD display, press **TIMER** button on remote control and follow steps above to set.To cancel **TIMER ON/OFF** setting, press **TIMER** button on remote control again until the **TIMER** disappears from LCD display.

3. Press the MEMO / C-ADJ button again and minute digit will flash. Then press the TUNING • DOWN / PREVIOUS or TUNING • UP / NEXT button until the correct minute digit appears.

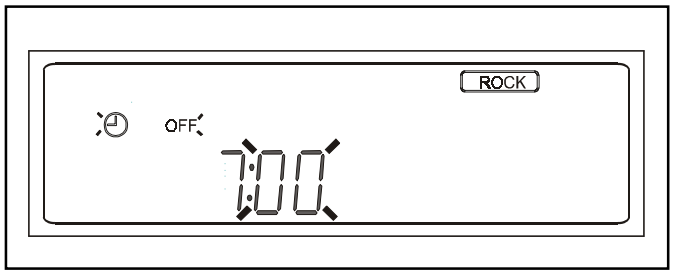


4. Press the TIMER button until the appears, then press the POWER button to turn the system to STANDBY mode.

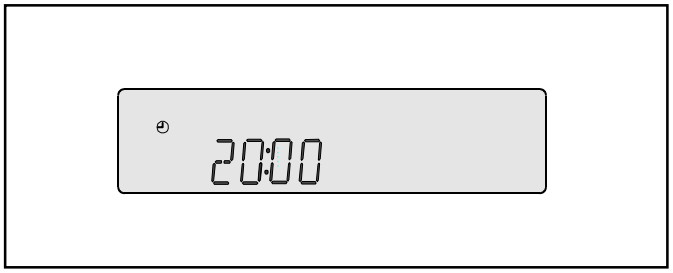


***NOTE:*** *Make sure the is displayed. The system will automatically turn on/off itself when set time arrives.*

## SLEEP TIMER

Your system can automatically turn itself off after 10 to 90 minutes. Choose the period that you wish system to stay on, and when the “SLEEP” time arrives, the system will turn itself off automatically.

1. Turn the system on and press SLEEP button. The “SLEEP” indicator will illuminate.

2. Press the SLEEP button continuously to set the sleep time from 90 to 10.

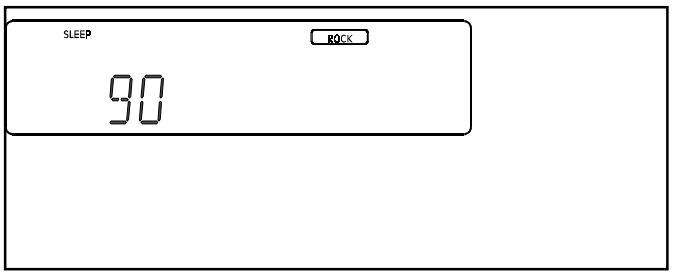




Download from Www.Somanuals.com. All Manuals Search And Download.

# TURNTABLE

## PHONO

### CONTROLS AND FEATURES

1. 45 rpm Adaptor
2. Turntable platter
3. Cueing lever
4. Speed selector
5. Tone arm
6. Tone arm rest

## PHONO

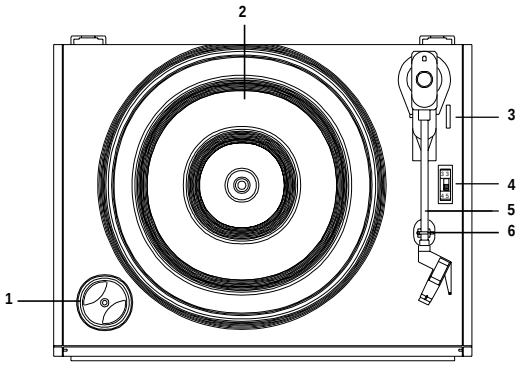


### PLAYING A RECORD:

1. Switch the system on using the POWER button.

2. Remove the stylus (needle) cover.

3. Unlock the tone arm using the tone arm lock.

4. Use the function selector to select the PHONO / AUX position.

5. Set the speed selector to either 33 rpm or 45 rpm according to the record to be played.Use the 45 rpm spindle adaptor to play 45 rpm records.

6. Place a record on the turntable. Using the cueing lever, raise the tone arm. Move the tone arm outwards, away from the turntable platter. The turntable platter will start to rotate.

7. Move the tone arm over the record and release gently. The stylus will lower onto the record and start to play.

8. Adjust the VOLUME control to obtain desired listening level.

9. Adjust the graphic equalizer to suit your listening pleasure.

10. During play(if you wish so) move the tone arm inward towards the center of the turntable platter, thus switching it off. Be sure the tone arm is replaced and locked correctly using the tone arm lock. This will avoid damage to the stylus when the record deck is not in use.

11. When the record has finished playing, the turntable platter will switch off automatically. Secure tone arm using the tone arm lock.

***NOTE:*** *If you input a signal from the AUX jack while Phono is playing, you may hear both simultaneously.*

Download from Www.Somanuals.com. All Manuals Search And Download.

# CD CHANGER

## LOADING A DISC INTO THE CD TRAY

1. Press the POWER button to switch on the system.

2. Select the CD function by pressing the CD button on the front panel. You can also press the CD button on the remote control.

3. The disc indicator corresponding to the currently selected disc will be surrounded by an illuminating semi-circle at all times.

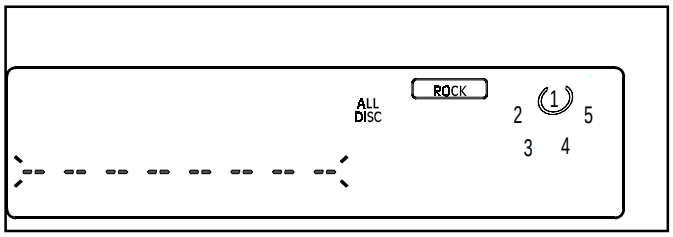


4. Press the OPEN / CLOSE button to open the CD door.

5. Insert only one disc into each of the five CD trays.

6. To insert a disc into the fifth tray, press the DISC SKIP or CD button and the fifth disc position will rotate to the front automatically.

7. Press the OPEN / CLOSE button again to close the CD door.

## DISC STATUS

To check the disc status, first press the PLAY / PAUSE button to start playback, then press the DISC SKIP button once for each disc.

1. When the particular disc tray is being checked by the playback sensor, the total tracks number and total time will be read and displayed.

2. If there is no disc in the selected tray, the disc number indicator light will go out.

## NORMAL CD PLAYBACK

1. Press the PLAY / PAUSE button to start playback. Press repeatly to start or pause the CD playback.

2. The playback sensor will search the disc trays.

3. If the first disc tray is empty, the disc number indicator for that disc will disappear. Then the playback sensor will detect the next disc and the semi-circle indicator for the next disc will illuminate.

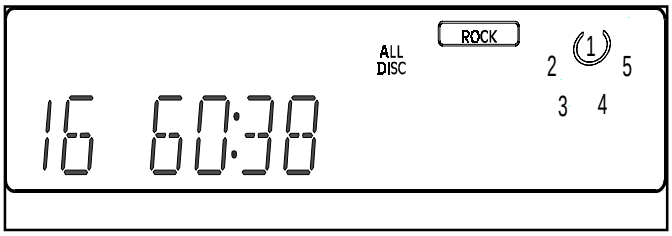


4. When the first disc is found, it will immediately begin to read and display the total tracks number and total time of this disc. Press the PLAY / PAUSE button to begin playback from track 1.

5. Press the TUNING • DOWN / PREVIOUS or TUNING • UP / NEXT button briefly to select the desired track.

6. Press and hold the TUNING • UP / NEXT button to move forward.

7. Press and hold the TUNING • DOWN / PREVIOUS button to move backward.

8. Press the STOP / MEMO • DOWN button to stop CD playback.

9. You can interrupt CD playback by pressing PLAY / PAUSE. Press the same key again to resume playback.

10. To select another disc, simply press the DISC SKIP or CD button repeatedly until the desired disc is selected.


Download from Www.Somanuals.com. All Manuals Search And Download.

## CD RANDOM PLAYBACK

1. Press the RANDOM button before or during play.

2. The RANDOM indicator illuminates and tracks are now played in a random order.

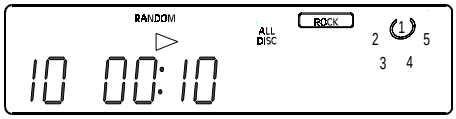


3. Each time you press the TUNING • UP / NEXT button the next random track will play.

4. Press the TUNING • DOWN / PREVIOUS button to return to the beginning of the track.

5. Press the RANDOM button again if you wish to return to normal play.

## CD REPEAT PLAYBACK

1. Press the REPEAT / MEMO • UP button once before or during playback to select the REPEAT ALL DISC mode, and the ² REPEAT ALL DISC ² indicator will illuminate. When this mode is selected, the tracks on all discs will be played repeatedly.

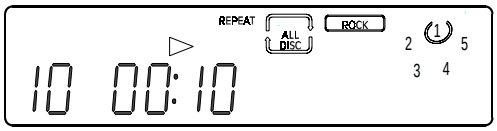


2. Press the REPEAT / MEMO • UP button twice before or during playback to select the REPEAT ONE DISC mode, and the ² REPEAT ONE DISC ² indicator will illuminate. When this mode is selected, all tracks on one particular disc will be played repeatedly.

## CD REPEAT PLAYBACK

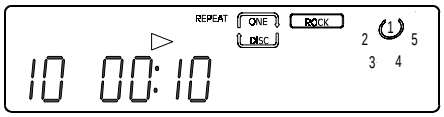


3. Press the REPEAT / MEMO • UP button three times before or during playback to select the REPEAT ONE mode. When this mode is selected, the same track will be played repeatedly.

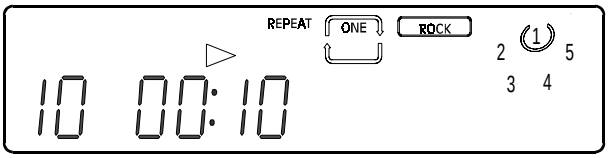


4. Press the REPEAT / MEMO • UP button four times to cancel the Repeat Playback function.

## DISPLAYING TIME INFORMATION

1. In CD normal play mode, press MODE / REMAIN button to change the following display :

•Playing time of current track.

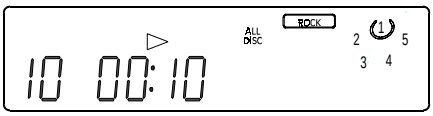


•Remaining time of current track.

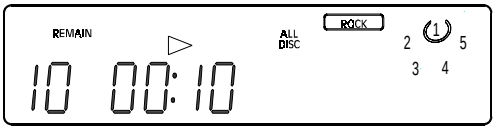




Download from Www.Somanuals.com. All Manuals Search And Download.

•Total remaining time of current disc

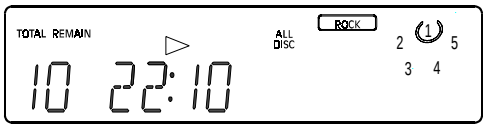


•Total playing time of current disc.

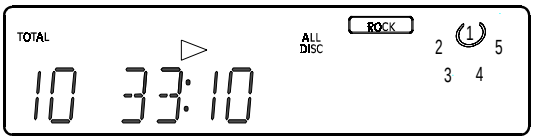


## CD PROGRAM ( CD MEMORY )

### Storing a Program

1. In CD stop mode, press the MEMO / C-ADJ button to select the CD program function.

2. The track number, program number and “MEMORY” indicators will flash.

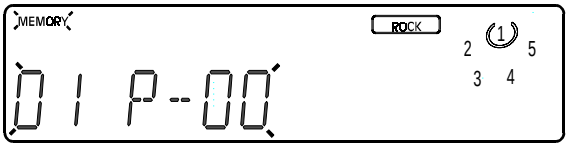


3. Select the disc number by pressing the DISC SKIP button, and press the TUNING • UP / NEXT or TUNING • DOWN / PREVIOUS button until the desired track number that you wish to program appears on the display.

4. Press the MEMO / C-ADJ. button to store the track number you selected into the CD program, and the CD program number will skip one step forward to wait for you to select and store another track number.

***NOTE:*** *You can also select and store the track number directly with the number keys 0-9 / +10 on the remote control.*

5. Select another track number and store the track into the CD program by following step 3 to step 4.

6. Up to 40 CD tracks can be programmed. When 40 tracks have been stored, the ² FULL ² indicator will illuminate.

### Checking a Program

1. In CD PLAYBACK mode, press the TUNING • DOWN / PREVIOUS or TUNING • UP / NEXT button to check the CD program which you stored.

2. Each time the TUNING • DOWN / PREVIOUS or TUNING • UP / NEXT button is pressed, the CD program number appears together with the corresponding disc and track number.

### Playing a Program

1. Press the PLAY / PAUSE button to start the CD program from the first track you stored.

2. Also you can press the TUNING • DOWN /PREVIOUS or TUNING • UP / NEXT button to select a particular track to play from the CD program.

3. Programmed tracks will remain stored in the memory (even when the system is switched off) until they are erased.

### Erasing a Program

In CD stop mode, press the STOP / MEMO • DOWN button to erase the CD program. The MEMORY indicator goes out and the program is erased.

***NOTE:*** *When the CD program has been done, you can only play the memory tracks. Unless you erase the CD program, the CD normal playing cannot be resumed .*



Download from Www.Somanuals.com. All Manuals Search And Download.

# TAPE PLAYER

## LOADING ONE TAPE

1. Press the POWER button to switch on the system.

2. Select the TAPE function by pressing the TAPE button on the front panel or remote control.

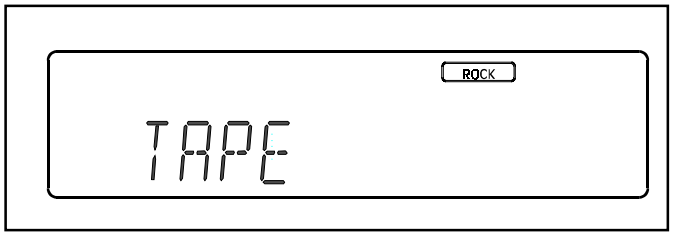


3. Depress the STOP / EJECT button of either [ DECK A] or [ DECK B ] to open the door.

4. Insert only one tape into either [ DECK A ] or [ DECK B ].

5. To close the tape deck door, simply push the door back to its previous position.

## NORMAL PLAYBACK [ DECK A ] or [ DECK B ]

1. Press the PLAY button to start playback.

2. Depress the REW button to rewind the tape.

3. Depress the F.FWD button to start fast forward.

4. Depress the STOP / EJECT button to stop tape playback. Depress the STOP / EJECT button again to open the tape deck door.

5. You can interrupt tape playback by pressing the PAUSE button. Press the same button again to resume playback.

## RECORDING [ DECK A ]

**Recording from TAPE to TAPE**

1. Insert a blank tape into [ DECK A ].

2. Insert the tape to be copied into [ DECK B ].

3. Press the PAUSE button on [ DECK A ], then press the RECORD button. Press the PLAY button on [ DECK B ] to begin dubbing.

4. If you wish to double the recording speed, simply depress the ▟ ST. / NOR & ▬ MONO. / H.S.D. button to HSD mode before starting.

***NOTE:*** *When the HSD (High Speed Dubbing) function is activated, the playback speed of [ DECK B ] will also double.*

5. To cancel the HSD function, press the ▟ ST. / NOR & ▬ MONO. / H.S.D. button again.

6. To stop or pause the recording, press the STOP / EJECT or PAUSE button on [ DECK A ].

7. To stop or pause playback, press the STOP / EJ or PAUSE button on [ DECK B ].

**Recording from CD to TAPE**

1. Insert a blank tape into [ DECK A ].

2. Select CD function by pressing the CD button on the front panel or remote control.

3. Insert the CD disc which is to be copied to the blank tape in [ DECK A ].

4. Press the RECORD and PLAY buttons on [ DECK A ] to start the CD-to-TAPE synchro recording. The ²REC CD SYNC ² indicator will illuminate on the display and the CD will start at the same time.

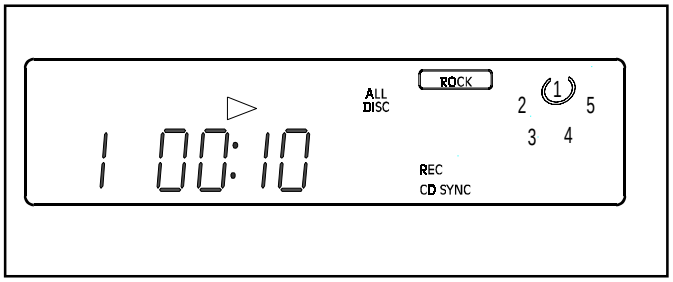




Download from Www.Somanuals.com. All Manuals Search And Download.

## RECORDING [ DECK A ]

***NOTE:*** *To set up a CD program before recording, see page 17.*

5. To stop recording , press the STOP / EJECT button on [ DECK A ] ,and at this time , the CD playback will be in the Pause mode. If you press the RECORD and PLAY buttons on [ DECK A ] again, the CD playback will continue playing automatically.

6. To stop or pause CD playback, press STOP button or PLAY / PAUSE button of CD controls.

**Recording from TUNER to TAPE**

1. Insert a blank tape into [ DECK A ].

2. Select the TUNER function by pressing the TUNER / BAND button on the front panel or remote control.

3. Press the TUNER / BAND button repeatedly until the desired band (FM or AM) is selected.

4. Press the TUNING • UP / NEXT or TUNING • DOWN / PREVIOUS button to select the desired frequency.

5. Press the RECORD and PLAY button on [ DECK A ] to start TUNER-to-TAPE recording.

6. To stop or pause recording, press the STOP/EJ or PAUSE button on [ DECK A ].

***NOTE:*** *The HSD (high speed dubbing) function does not operate during CD-to-TAPE or TUNER-to-TAPE recording.*

## SEQUENTIAL PLAYBACK [ DECK B ] TO [ DECK A ]

***NOTE:*** *The sequential play feature automatically plays [ DECK A ] after [ DECK B ] has played and shut off.*

1. Insert a tape into [ DECK A ] and [ DECK B ].

2. Press the PLAY button on [ DECK B ] to begin playback.

3. Press the PAUSE button on [ DECK A ].

4. Press the PLAY button on [ DECK A ]. When the tape in [ DECK B ] reaches the end. The PAUSE button on [ DECK A ] will release automatically and playback will begin.



Download from Www.Somanuals.com. All Manuals Search And Download.

# TUNER

## AUTO ( automatic ) / MANUAL TUNING

1. Press the POWER button to switch on the system. Select the TUNER function by pressing the TUNER / BAND button on the front panel or remote control.

2. Press the TUNER / BAND button repeatedly until the desired band (FM or AM) is selected.

3. For manual tuning, quickly press and release the TUNING • DOWN / PREVIOUS or TUNING • UP / NEXT button to select the desired frequency.

4. For auto tuning, press and hold the TUNING • DOWN / PREVIOUS or TUNING • UP / NEXT button for 1 second. The system will search until a station of sufficient strength is found. If the station is not the desired one, simply press and hold the TUNING • DOWN / PREVIOUS or TUNING • UP / NEXT button for 1 second again. Weak stations are skipped during automatic tuning.

***NOTE:*** *When tuning, the sound will be muted to eliminate interfering background noises. When a station is found, the audio signal will come back on. ² STEREO ² will appear on the display when an FM-stereo signal is received. With weak FM stereo signals, you may hear static or background noise. These noises can be suppressed by switching to MONO. Simply press the ST./NOR. & MONO /H.S.D. button to select MONO mode. ² STEREO ² will disappear from the display.*

## PRESET MEMORY

**Storing preset stations**

You can store preferred stations in the TUNER's memory (Each 20 stations for FM and AM).

1. Press TUNER / BAND button to select TUNER function and FM or AM band.

2. Press the TUNING • DOWN / PREVIOUS or TUNING • UP / NEXT button to select the frequency you wish to store.

3. Press MEMO / C-ADJ button, the “Memory” indicator will flash, then press REPEAT / MEMO • UP or STOP / MEMO • DOWN or 0-9/+10 digit buttons to select the desired location to be preset.

4. Press MEMO / C-ADJ button again to store the station into the designated location.

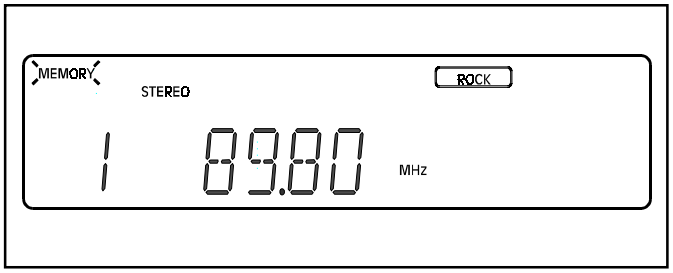


5. To set another preset station, follow steps 2 to 4.

**Selecting preset stations**

1. Select the TUNER function and FM or AM band with the TUNER / BAND button on the front panel or remote control.

2. Press the REPEAT / MEMO •UP or STOP / MEMO •DN button on the front panel or remote control until the required preset memory number appears. Or press the 0-9/+10 digit buttons on the remote control to select the preset stations directly.


Download from Www.Somanuals.com. All Manuals Search And Download.

# GENERAL INFORMATION

## TROUBLESHOOTING

Please make these simple checks before calling for service. These tips can save you time and money.

| | |
|---|---|
| NO POWER | • Make sure the power cord is inserted fully into a 120V/60Hz outlet.<br>• Check to be sure that the outlet is not controlled by a wall switch.<br>• Unplug the power cord, wait 1 minute, then reinsert the plug and push the **POWER** button. |
| NO VOLUME | • Check the VOLUME control setting.<br>• Make sure the correct feature has been selected ( for instance, ² CD ² should be selected when playing a CD ).<br>• Make sure the speakers are properly connected.<br>• Make sure the speaker wires are not shorted together.<br>• If headphones are plugged in, disconnect them. |
| REMOTE CONTROL DOESN'T WORK | • Check and if necessary, replace the batteries.<br>• Make sure the remote is pointed head-first at the Music Center.<br>• Make sure the Music Center is plugged into an operating wall outlet.<br>• The remote may be too far away from Music Center. |
| CAN'T TUNE RADIO STATIONS | • Repeat channel selection.<br>• Make sure the antennas are properly connected. |

***NOTE:*** *if the operation of the unit or display is not normal, you should reset the unit by disconnecting it from the household wall outlet for 1 minute and then reinserting the plug.*

**WARNING:** IF YOU ARE UNABLE TO REMEDY A PROBLEM BY FOLLOWING THESE HINTS, CONSULT YOUR DEALER OR AN AUTHORIZED SERVICE CENTER. UNDER NO CIRCUMSTANCES SHOULD YOU TRY TO REPAIR THE SYSTEM YOURSELF, AS THIS WILL INVALIDATE YOUR WARRANTY.


Download from Www.Somanuals.com. All Manuals Search And Download.

# GENERAL INFORMATION

## SYSTEM SPECIFICATIONS

### RECEIVER

**Power output:**
Front ..... 5Wx2
Total harmonic distortion ..... 10%
Power supply ..... 120V/60Hz
**Tuning Range:**
FM ..... 87.5~108.0MHz
AM ..... 530~1710KHz

*Specifications subject to change without notice.


Download from Www.Somanuals.com. All Manuals Search And Download.

Free Manuals Download Website

http://myh66.com

http://usermanuals.us

http://www.somanuals.com

http://www.4manuals.cc

http://www.manual-lib.com

http://www.404manual.com

http://www.luxmanual.com

http://aubethermostatmanual.com

Golf course search by state

http://golfingnear.com

Email search by domain

http://emailbydomain.com

Auto manuals search

http://auto.somanuals.com

TV manuals search

http://tv.somanuals.com