NordicTrack®

APEX 6500

Model No. 30705.0
Serial No. _____

Write the serial number in the space above for reference.

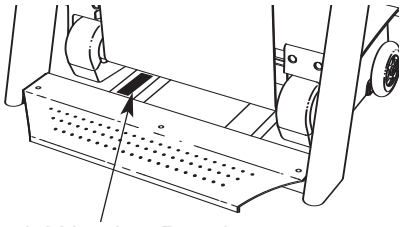

Serial Number Decal

USER'S MANUAL

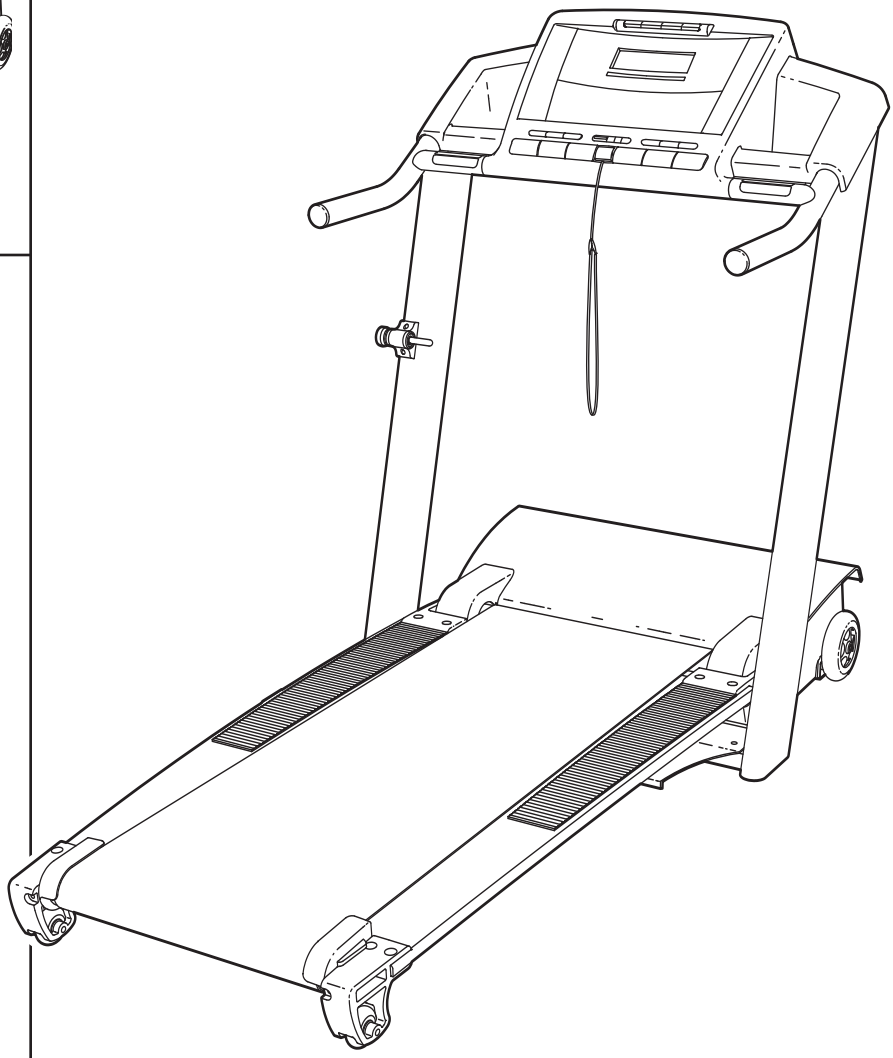

QUESTIONS?

As a manufacturer, we are committed to providing complete customer satisfaction. If you have questions, or if parts are damaged or missing, PLEASE DO NOT CONTACT THE STORE. For assistance, contact our Customer Service Department.

CALL TOLL-FREE:
1-888-936-4266
Mon.–Fri., 8:00 until 17:00 EST (excluding holidays)

OR E-MAIL US:
customerservice@iconcanada.ca

⚠ CAUTION

Read all precautions and instructions in this manual before using this equipment. Save this manual for future reference.

Visit our website at
www.nordictrack.com

Download from Www.Somanuals.com. All Manuals Search And Download.

TABLE OF CONTENTS

WARNING DECAL PLACEMENT 2
IMPORTANT PRECAUTIONS 3
BEFORE YOU BEGIN 5
ASSEMBLY 6
OPERATION AND ADJUSTMENT 10
HOW TO FOLD AND MOVE THE TREADMILL 24
TROUBLESHOOTING 26
EXERCISE GUIDELINES 28
PART LIST 30
EXPLODED DRAWING 32
ORDERING REPLACEMENT PARTS . . . . . Back Cover
LIMITED WARRANTY . . . . . Back Cover

WARNING DECAL PLACEMENT

The decal shown here has been applied in the location shown. **If a decal is missing or illegible, call the telephone number on the front cover of this manual and request a free replacement decal. Apply the decal in the location shown.** Note: The decal may not be shown at actual size.

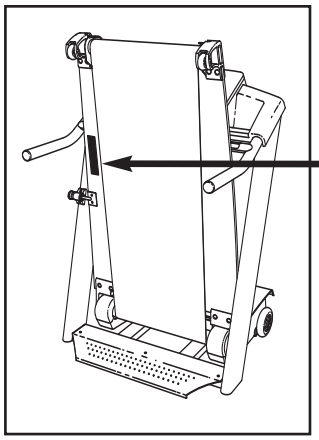

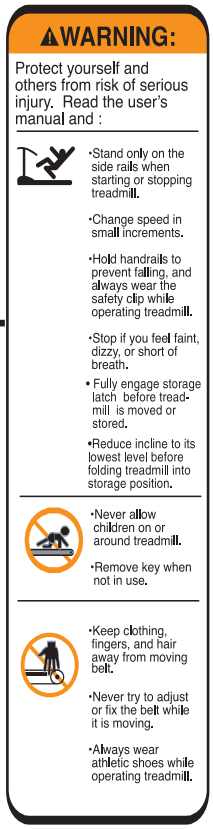

NordicTrack is a registered trademark of ICON IP, Inc.

Download from Www.Somanuals.com. All Manuals Search And Download.

IMPORTANT PRECAUTIONS

⚠ WARNING: To reduce the risk of serious injury, read all important precautions and instructions in this manual and all warnings on your treadmill before using your treadmill. ICON assumes no responsibility for personal injury or property damage sustained by or through the use of this product.

1. Before beginning any exercise program, consult your physician. This is especially important for persons over the age of 35 or persons with pre-existing health problems.
2. It is the responsibility of the owner to ensure that all users of this treadmill are adequately informed of all warnings and precautions.
3. Use the treadmill only as described.
4. Place the treadmill on a level surface, with at least 8 ft. (2.4 m) of clearance behind it and 2 ft. (0.6 m) on each side. Do not place the treadmill on any surface that blocks air openings. To protect the floor or carpet from damage, place a mat under the treadmill.
5. Keep the treadmill indoors, away from moisture and dust. Do not put the treadmill in a garage or covered patio, or near water.
6. Do not operate the treadmill where aerosol products are used or where oxygen is being administered.
7. Keep children under the age of 12 and pets away from the treadmill at all times.
8. The treadmill should not be used by persons weighing more than 325 lbs. (147 kg)
9. Never allow more than one person on the treadmill at a time.
10. Wear appropriate exercise clothes while using the treadmill; do not wear loose clothes that could become caught in the treadmill. Athletic support clothes are recommended for both men and women. *Always wear athletic shoes; never use the treadmill with bare feet, wearing only stockings, or in sandals.*
11. When connecting the power cord (see page 10), plug the power cord into a surge suppressor (not included) and plug the surge suppressor into a grounded circuit capable of carrying 15 or more amps. No other appliance should be on the same circuit. Do not use an extension cord.
12. Use only a single-outlet surge suppressor that meets all of the specifications described on page 10. To purchase a surge suppressor, call the toll-free telephone number on the front cover of this manual.
13. Failure to use a properly functioning surge suppressor could result in damage to the control system of the treadmill. If the control system is damaged, the walking belt may change speed, accelerate, or stop unexpectedly, which may result in a fall and serious injury.
14. Keep the power cord and the surge suppressor away from heated surfaces.
15. Never move the walking belt while the power is turned off. Do not operate the treadmill if the power cord or plug is damaged, or if the treadmill is not working properly. (See TROUBLESHOOTING on page 26 if the treadmill is not working properly.)
16. Read, understand, and test the emergency stop procedure before using the treadmill (see HOW TO TURN ON THE POWER on page 12).
17. Never start the treadmill while you are standing on the walking belt. Always hold the handrails while using the treadmill.
18. The treadmill is capable of high speeds. Adjust the speed in small increments to avoid sudden jumps in speed.
19. The pulse sensor is not a medical device. Various factors, including the user's movement, may affect the accuracy of heart rate readings. The pulse sensor is intended only as an exercise aid in determining heart rate trends in general.
20. Never leave the treadmill unattended while it is running. Always remove the key, unplug the power cord, and switch the reset/off circuit breaker to the off position when the treadmill is not in use. (See the drawing on page 5 for the location of the reset/off circuit breaker.)

Download from Www.Somanuals.com. All Manuals Search And Download.

21. Do not attempt to raise, lower, or move the treadmill until it is properly assembled. (See ASSEMBLY on page 6, and HOW TO FOLD AND MOVE THE TREADMILL on page 24.) You must be able to safely lift 45 pounds (20 kg) to raise, lower, or move the treadmill.

22. When folding or moving the treadmill, make sure that the storage latch is fully closed.

23. Do not change the incline of the treadmill by placing objects under the treadmill.

24. Always remove iFIT cards from the iFIT slot when you are not using them.

25. Inspect and properly tighten all parts of the treadmill regularly.

26. Never insert or drop any object into any opening.

27. **DANGER:** Always unplug the power cord immediately after use, before cleaning the treadmill, and before performing the maintenance and adjustment procedures described in this manual. Never remove the motor hood unless instructed to do so by an authorized service representative. Servicing other than the procedures in this manual should be performed by an authorized service representative only.

28. The treadmill is intended for in-home use only. Do not use the treadmill in a commercial, rental, or institutional setting.

SAVE THESE INSTRUCTIONS

Download from Www.Somanuals.com. All Manuals Search And Download.

BEFORE YOU BEGIN

Thank you for selecting the revolutionary NordicTrack® APEX 6500 treadmill. The APEX 6500 treadmill offers a selection of features designed to make your workouts at home more enjoyable and effective. And when you're not exercising, the unique APEX 6500 treadmill can be folded up, requiring less than half the floor space of other treadmills.

For your benefit, read this manual carefully before using the treadmill. If you have questions after reading this manual, please see the front cover of this manual. To help us assist you, note the product model number and serial number before contacting us. The model number and the location of the serial number decal are shown on the front cover of this manual.

Before reading further, please familiarize yourself with the parts that are labeled in the drawing below.

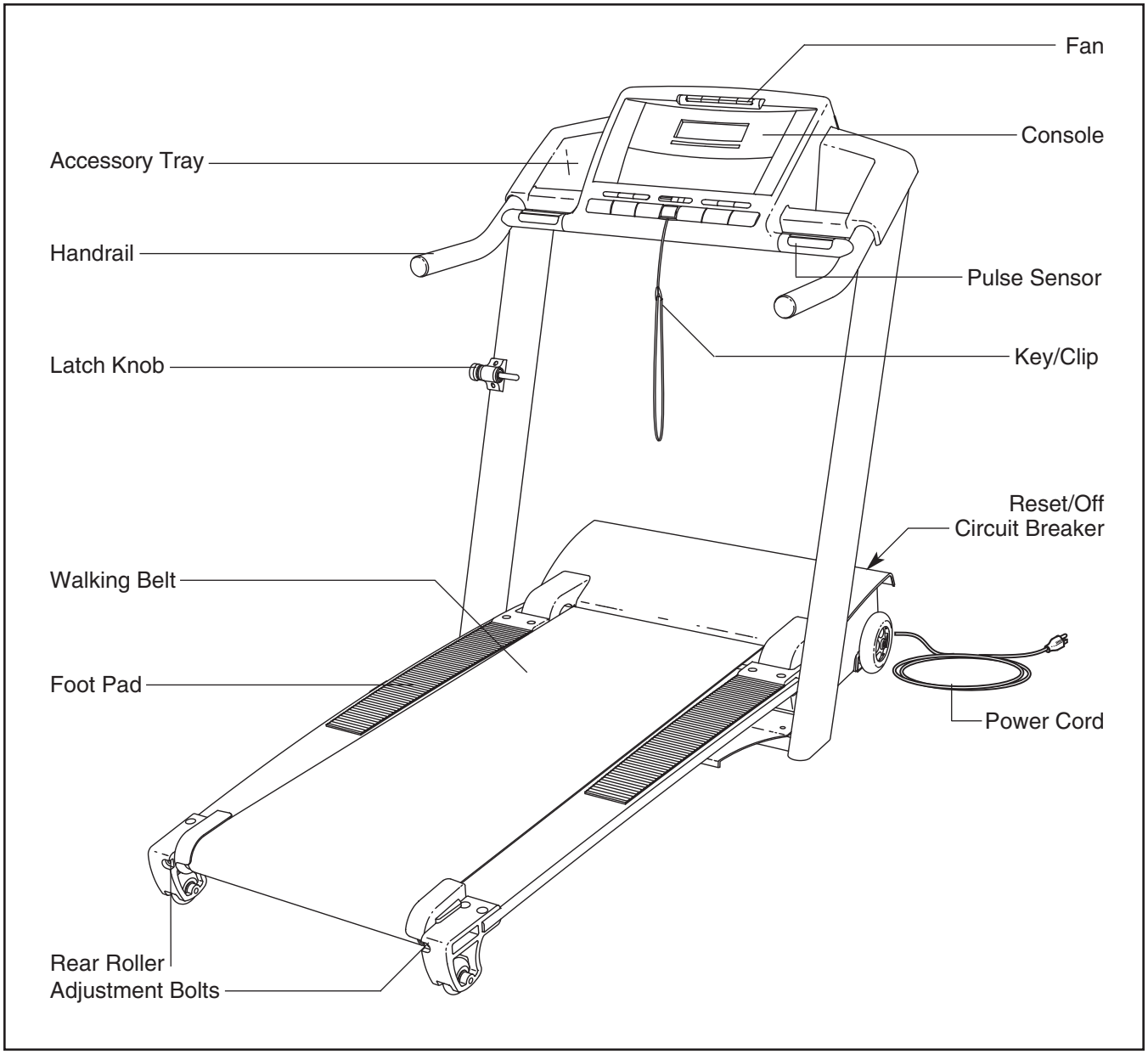

Download from Www.Somanuals.com. All Manuals Search And Download.

ASSEMBLY

Assembly requires two persons. Set the treadmill in a cleared area and remove all packing materials. **Do not dispose of the packing materials until assembly is completed.**

Note: The underside of the treadmill walking belt is coated with high-performance lubricant. During shipping, a small amount of lubricant may be transferred to the top of the walking belt or the shipping carton. This is a normal condition and does not affect treadmill performance. If there is lubricant on top of the walking belt, simply wipe off the lubricant with a soft cloth and a mild, non-abrasive cleaner.

Assembly requires the included hex key and your own Phillips screwdriver , standard screwdriver , and wire cutters . For help identifying the assembly hardware, see the hardware drawings below. To avoid damaging plastic parts, do not use power tools for assembly.

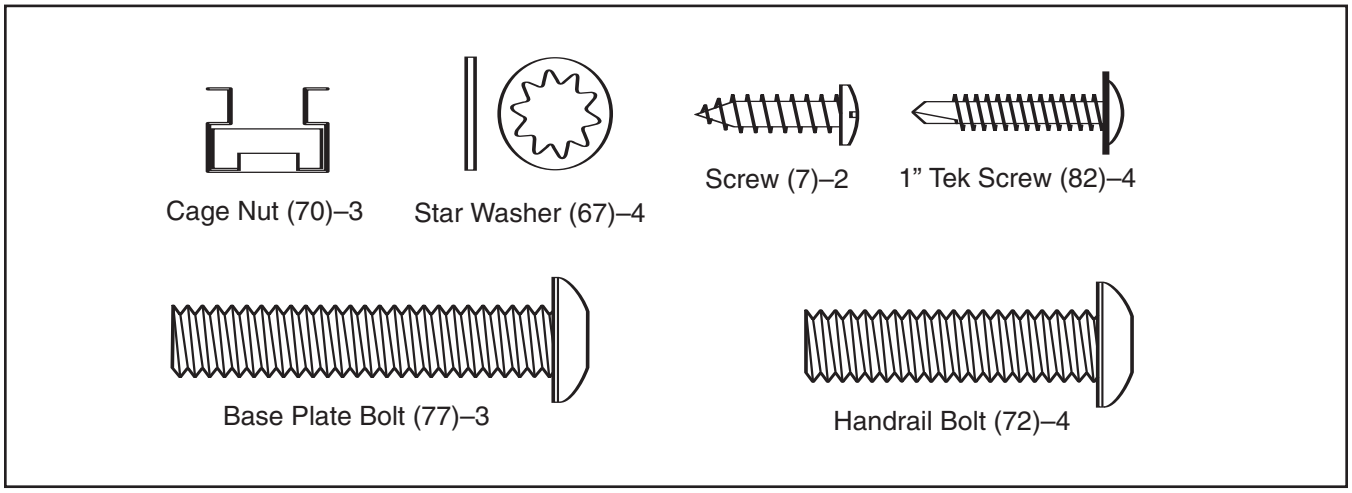

1. With the help of a second person, tip the Upright (20) down as shown.

   Insert the three Cage Nuts (70) into the three indicated holes in the treadmill. To insert each Cage Nut, first hook one side of the Cage Nut into a hole. Then use a standard screwdriver to press the other side of the Cage Nut into the hole, as shown

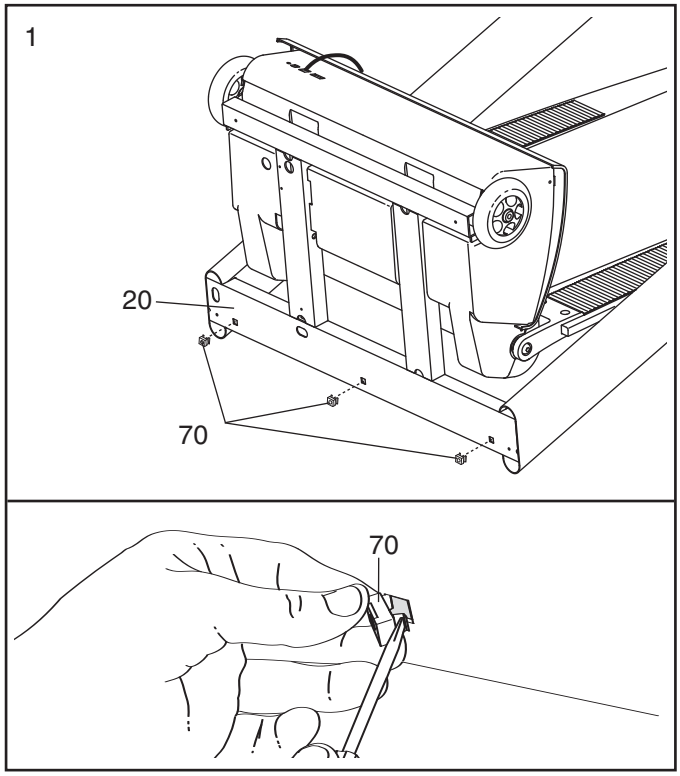

Download from Www.Somanuals.com. All Manuals Search And Download.

2. Attach the four Base Pads (81) to the bottom of the Upright (20) with the four 1" Tek Screws (82) in the locations shown.

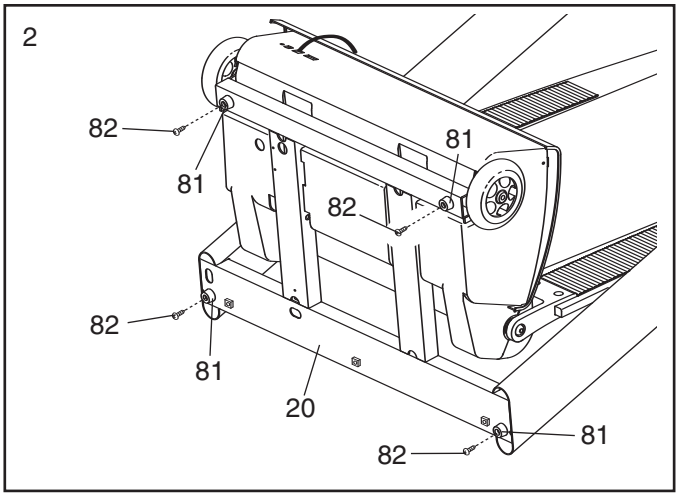

3. With the help of a second person, carefully raise the Upright (20) to the vertical position. Remove the band securing the Upright Wire Harness (73) to the right Upright. Have a second person hold the console assembly near the right Upright.

   Connect the Upright Wire Harness (73) to the console wire extending from the console assembly. **Make sure to connect the connectors properly (see the inset drawing). The connectors should slide together easily and snap into place.** If they do not, turn one connector and try again. **IF THE CONNECTORS ARE NOT CONNECTED PROPERLY, THE CONSOLE MAY BE DAMAGED WHEN THE POWER IS TURNED ON.** Then, insert the connectors into the right Upright (20).

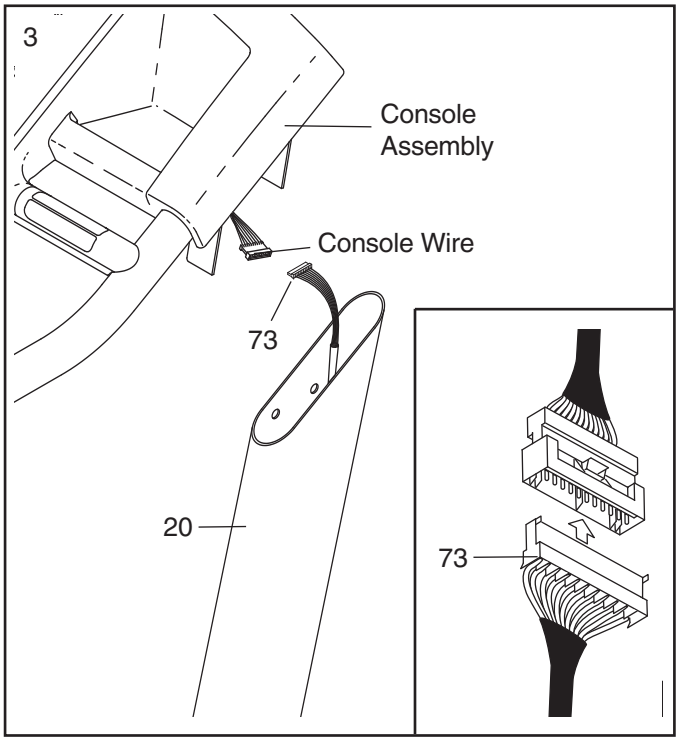

4. Carefully set the console assembly onto the top of the Upright (20) as shown. **Make sure that no wires are pinched.** Attach the console assembly to the Upright with four Star Washers (67) and four Handrail Bolts (72). **Start all four Handrail Bolts before tightening them.**

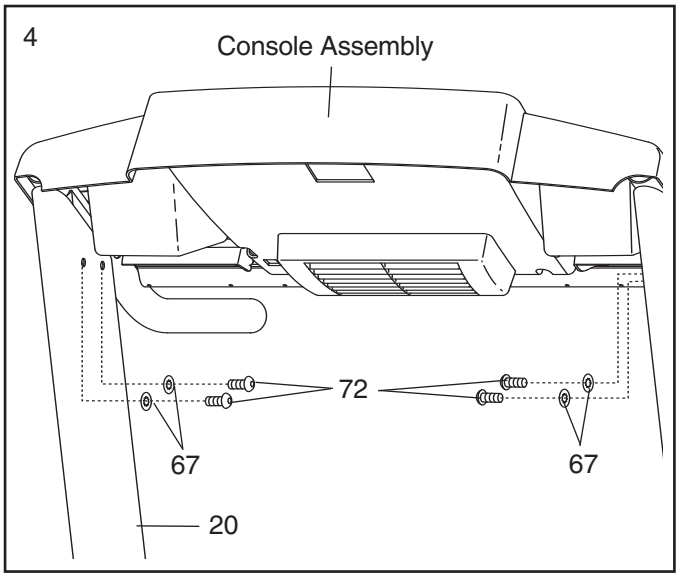

Download from Www.Somanuals.com. All Manuals Search And Download.

5. Attach the Latch Housing (34) to the left Upright (20) with two Screws (7); **start both Screws and then tighten them. Note: Make sure that the large hole in the Latch Housing is on the indicated side.**

   Remove the knob from the pin. Make sure that the collar and the spring are on the pin. (Note: If there are two collars, place one on each side of the spring.) Next, insert the pin into the Latch Housing (34). Then, tighten the knob onto the pin.

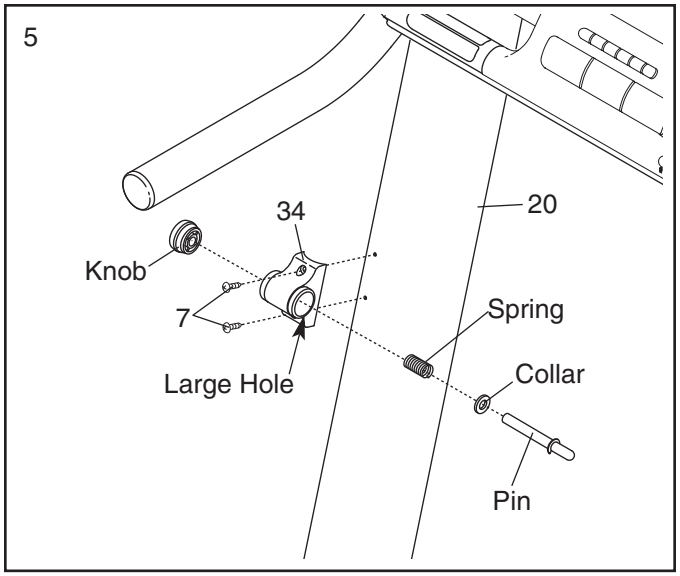

6. With the help of a second person, raise the Walking Platform (15) to the storage position and make sure that the latch pin is engaged as described on page 24.

   Position the Base Plate (75) on the treadmill as shown. Attach the Base Plate to the Upright (20) with the three Base Plate Bolts (77). Note: It may be helpful if a second person tips the treadmill slightly as you tighten the Bolts.

   Carefully lower the Walking Platform (15) to the floor as described on page 25.

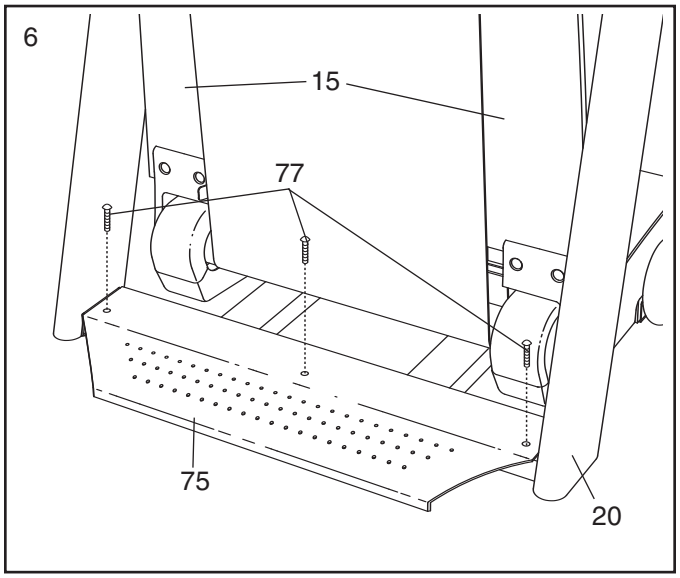

7. **Make sure that all parts are properly tightened before you use the treadmill.** Keep the included hex key in a secure place. The hex key is used to adjust the walking belt (see page 27). **To protect the floor or carpet from damage, place a mat under the treadmill.**

Download from Www.Somanuals.com. All Manuals Search And Download.

If you purchase the optional chest pulse sensor (see page 23), follow the steps below to install the receiver included with the chest pulse sensor.

1. **Make sure that the power cord is unplugged.** Remove the indicated Screws (7) from the back of the Console Base (98).

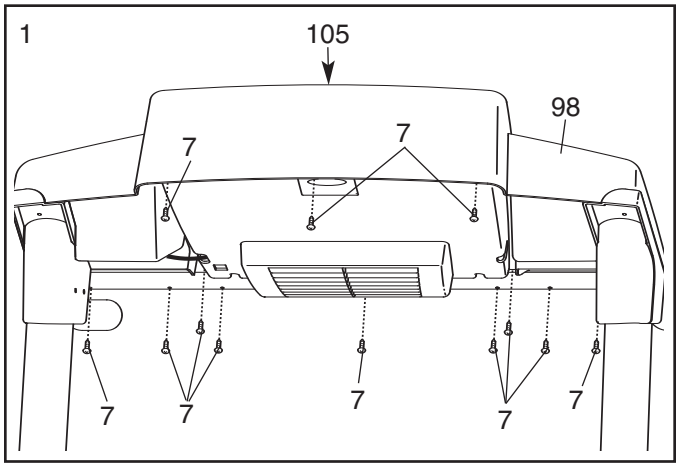

2. While a second person holds the Console (105), connect the wire on the receiver (A) to the indicated wire extending from the Console. **Next, hold the receiver so the small cylinder is oriented as shown and is facing away from the Console.** Attach the receiver to the Console in the location shown with the two included Small Screws (B).

3. **Make sure that no wires are pinched.** See drawing 1. Reattach the Console (105) to the Console Base (98) with the Screws (7). Discard the other wires included with the receiver.

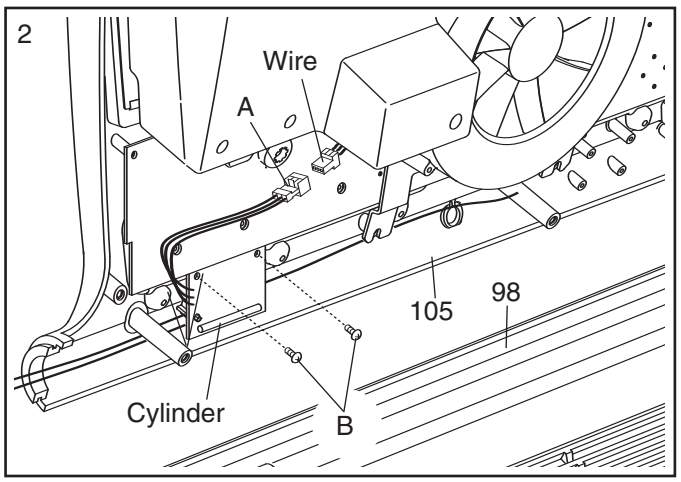

Download from Www.Somanuals.com. All Manuals Search And Download.

OPERATION AND ADJUSTMENT

THE PRE-LUBRICATED WALKING BELT

Your treadmill features a walking belt coated with high-performance lubricant. **IMPORTANT: Never apply silicone spray or other substances to the walking belt or the walking platform. Such substances will deteriorate the walking belt and cause excessive wear.**

HOW TO PLUG IN THE POWER CORD

⚠ DANGER: Improper connection of the equipment-grounding conductor can result in an increased risk of electric shock. Check with a qualified electrician or serviceman if you are in doubt as to whether the product is properly grounded. Do not modify the plug provided with the product—if it will not fit the outlet, have a proper outlet installed by a qualified electrician.

Your treadmill, like any other type of sophisticated electronic equipment, can be seriously damaged by sudden voltage changes in your home's power. Voltage surges, spikes, and noise interference can result from weather conditions or from other appliances being turned on or off. **To decrease the possibility of your treadmill being damaged, always use a surge suppressor with your treadmill (see drawing 1 at the right). To purchase a surge suppressor call the toll-free telephone number on the front cover of this manual.**

Use only a single-outlet surge suppressor that is UL 1449 listed as a transient voltage surge suppressor (TVSS). The surge suppressor must have a UL suppressed voltage rating of 400 volts or less and a minimum surge dissipation of 450 joules. The surge suppressor must be electrically rated for 120 volts AC and 15 amps. There must be a monitoring light on the surge suppressor to indicate whether it is functioning properly. Failure to use a properly functioning surge suppressor could result in damage to the control system of the treadmill. If the control system is damaged, the walking belt may change speed, accelerate, or stop unexpectedly, which may result in a fall and serious injury.

This product must be grounded. If it should malfunction or break down, grounding provides a path of least resistance for electric current to reduce the risk of electric shock. This product is equipped with a cord having an equipment-grounding conductor and a grounding plug. **Plug the power cord into a surge suppressor, and plug the surge suppressor into an appropriate outlet that is properly installed and grounded in accordance with all local codes and ordinances. Important: The treadmill is not compatible with GFCI-equipped outlets.**

This product is for use on a nominal 120-volt circuit, and has a grounding plug that looks like the plug illustrated in drawing 1 below. A temporary adapter that looks like the adapter illustrated in drawing 2 may be used to connect the surge suppressor to a 2-pole receptacle as shown in drawing 2 if a properly grounded outlet is not available.

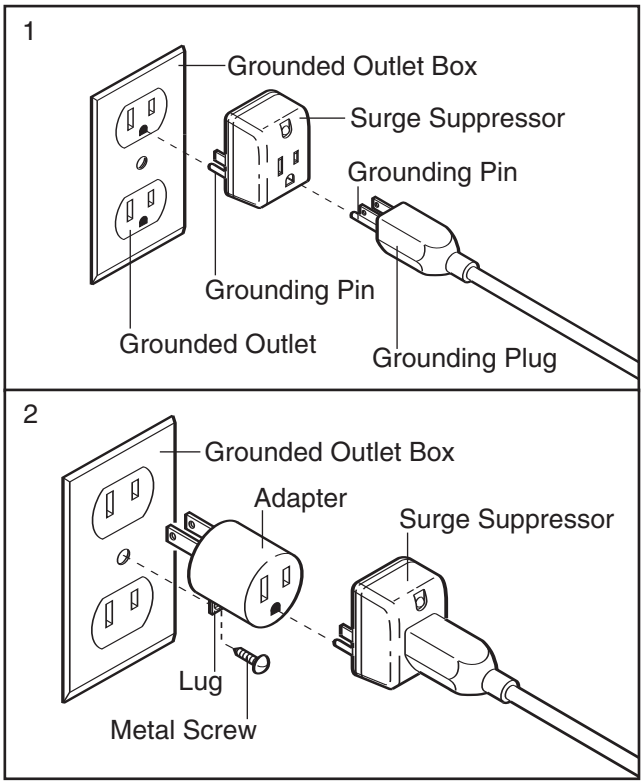

The temporary adapter should be used only until a properly grounded outlet (drawing 1) can be installed by a qualified electrician.

The green-colored rigid ear, lug, or the like extending from the adapter must be connected to a permanent ground such as a properly grounded outlet box cover. Whenever the adapter is used it must be held in place by a metal screw. **Some 2-pole receptacle outlet box covers are not grounded. Contact a qualified electrician to determine if the outlet box cover is grounded before using an adapter.**

Download from Www.Somanuals.com. All Manuals Search And Download.

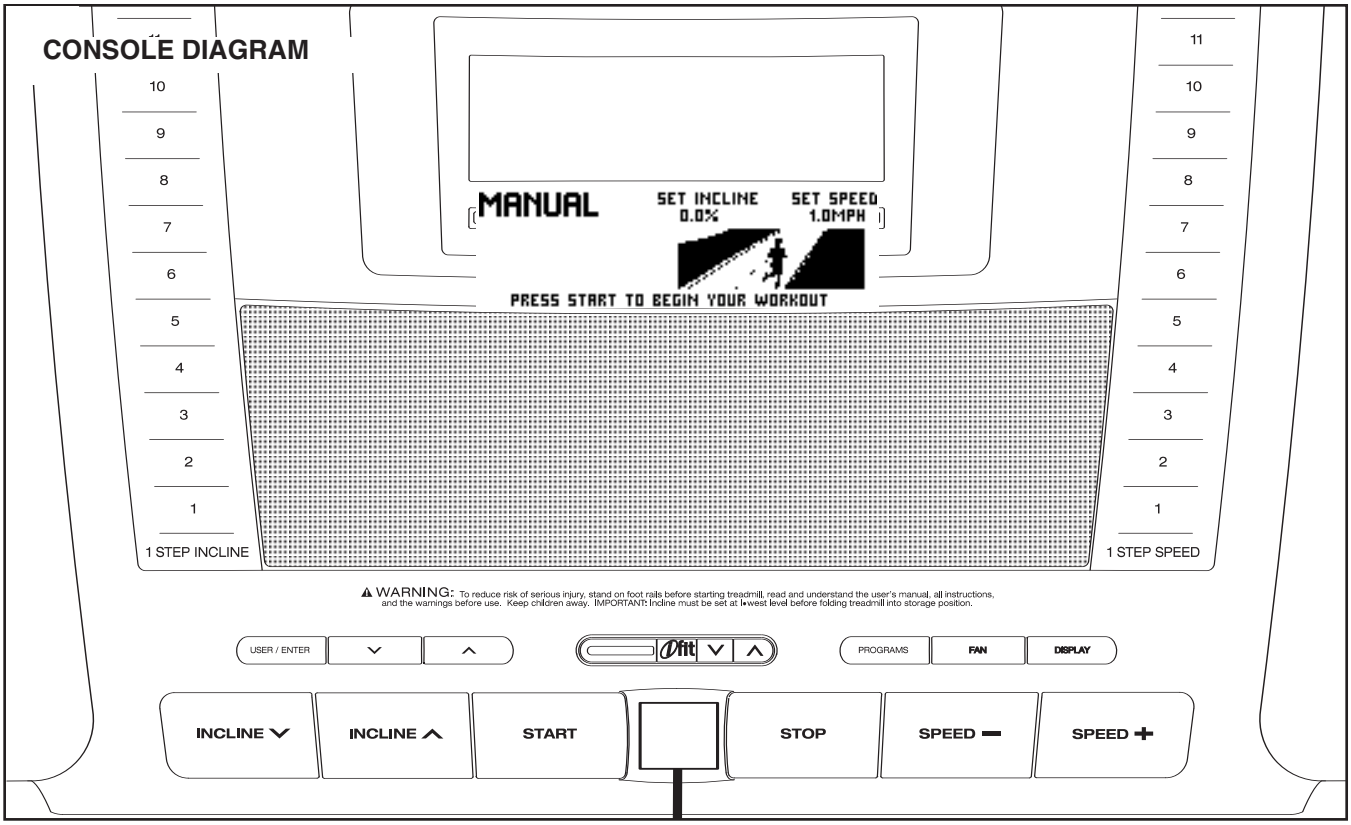

FEATURES OF THE CONSOLE

The treadmill console offers an impressive array of features designed to make your workouts more effective and enjoyable. When the manual mode of the console is selected, the speed and incline of the treadmill can be changed with the touch of a button. As you exercise, the console will display continuous exercise feedback. You can even measure your heart rate using the handgrip pulse sensor or the optional chest pulse sensor (see page 23).

In addition, the console features ten Cardio programs. Each program automatically controls the speed and incline of the treadmill as it guides you through an effective workout. The console also offers two Pulse programs that control the speed and incline of the treadmill to help you keep your heart rate near target heart rate settings. You can even create your own Record programs and save them for future use. Note: The Pulse programs require the use of the optional chest pulse sensor.

The console also features the new iFIT Interactive Workout system. The iFIT system enables the console to accept iFIT Interactive Workout Cards containing workout programs designed to help you achieve specific fitness goals. For example, lose unwanted pounds with the 8-week Weight Loss program, or train for a long-distance run with the Marathon program. iFIT programs automatically control the treadmill while the voice of a personal trainer coaches you and motivates you through every step of your workout. One iFIT Card with three new programs is included. Additional iFIT Cards are available separately. **To purchase iFIT Cards at any time, call the telephone number on the front cover of this manual.**

You can even listen to your favorite workout music or audio books with the console's MP3 stereo sound system.

To personalize console settings, see page 12. **To use the manual mode**, see page 14. **To use a Cardio program**, see page 16. **To use a Pulse program**, see page 18. **To create and use a Record program**, see pages 20 and 21. **To use an iFIT card**, see page 22. **To use the stereo sound system**, see page 23.

IMPORTANT: If there are sheets of clear plastic on the console, remove the plastic. To prevent damage to the walking platform, wear clean athletic shoes while using the treadmill. The first time you use the treadmill, observe the alignment of the walking belt, and center the walking belt if necessary (see page 24).

Download from Www.Somanuals.com. All Manuals Search And Download.

HOW TO TURN ON THE POWER

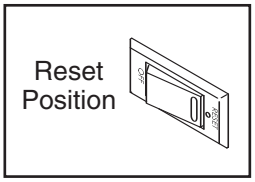

IMPORTANT: If the treadmill has been exposed to cold temperatures, allow it to warm to room temperature before turning on the power. If you do not do this, the console displays or other electrical components may become damaged.

Plug in the power cord (see page 10). Next, locate the reset/off circuit breaker on the treadmill frame near the power cord. Switch the circuit breaker to the reset position.

IMPORTANT: The console features a display demo mode, designed to be used if the treadmill is displayed in a store. If the displays light as soon as you plug in the power cord and switch the circuit breaker to the reset position, the demo mode is turned on. To turn off the demo mode, hold down the Stop button for a few seconds. If the displays remain lit, see step 4 on page 13 to turn off the demo mode.

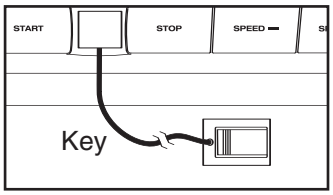

Next, stand on the foot rails of the treadmill. Find the clip attached to the key and slide the clip onto the waistband of your clothes. Then, insert the key into the console. After a moment, the displays will light. **IMPORTANT: In an emergency situation, the key can be pulled from the console, causing the walking belt to slow to a stop. Test the clip by carefully taking a few steps backward; if the key is not pulled from the console, adjust the position of the clip.**

HOW TO PERSONALIZE CONSOLE SETTINGS

The console features a user mode that allows you to designate yourself as User 1 or User 2, view your workout history, and enter user information before you begin exercising.

The console also features a settings mode that allows you to select a system of measurement for the console, turn on and turn off the demo mode, enter an audio trainer setting, adjust the volume and contrast settings of the console, and turn on and turn off the welcome screen.

Follow the steps below to personalize console settings.

1. **Select the user mode.**

To select the user mode, press the User/Enter button. The console can keep track of workout history and save information for two different users.

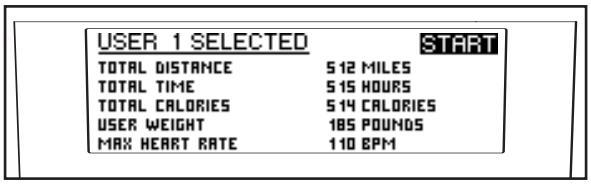

When the User/Enter button is pressed, the words “User 1 Selected” or “User 2 Selected” will appear in the display. To identify yourself as User 1 or User 2, press the User/Enter button once or twice.

Important: To highlight options within the menu, press the increase and decrease buttons beside the User/Enter button.

2. **View your workout history.**

The display will show the total number of miles or kilometers that the walking belt has moved, the total number of hours that the treadmill has been used, and the total number of calories that the user has burned.

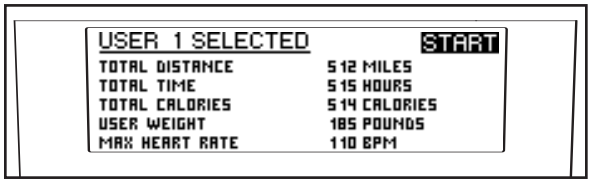

To reset any of the totals, first highlight the total that you want to reset and press the User/Enter button. Then, highlight NO or YES and press the User/Enter button.

3. **Enter user information.**

Highlight the words USER WEIGHT and then press the User/Enter button. Next, press the increase and decrease buttons beside the User/Enter button to enter your weight. Then, press the User/Enter button.

If you want to enter a maximum target heart rate (see HOW TO USE A PULSE PROGRAM on page 18), first highlight MAX HEART RATE and press the User/Enter button. Next, press the increase and decrease buttons beside the User/Enter button to enter a maximum target heart rate. Then, press the User/Enter button.

To exit the users mode, highlight START and then press the User/Enter button.

Download from Www.Somanuals.com. All Manuals Search And Download.

4. **Select the settings mode.**

To select the settings mode, first remove the key from the console. Then, hold down the Stop button while reinserting the key into the console.

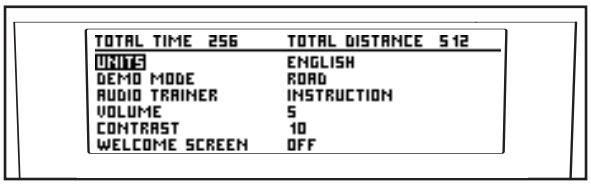

When the settings mode is selected, the display will show the word ENGLISH or METRIC to indicate which system of measurement is selected. To change the system of measurement, first highlight UNITS and press the User/Enter button. Next, press the increase or decrease button beside the User/Enter button to select the desired system of measurement. Then, press the User/Enter button.

The display will also show the words DEMO MODE and the current setting: OFF, LOGO, ROAD, or VISUAL EQ. The “demo mode” can be used while the treadmill is displayed in a store. While a demo mode is selected, the power cord can be plugged in, the key can be removed from the console, and the display will remain on. The console buttons will not function. To select a demo mode, highlight DEMO MODE and then press the User/Enter button. Next, press the increase or decrease button beside the User/Enter button to highlight OFF (to turn off the demo mode), LOGO (to display a logo), ROAD (to display an animation of a runner on a road), or VISUAL EQ (to display a visual). Then, press the User/Enter button.

You can select an audio setting if desired. When you use an iFIT Card, a personal trainer will guide you through your workouts and instruct you how to purchase more iFIT Cards if “Instruction” is selected as your audio setting. If you select the “On” setting, your personal trainer will simply guide you through your iFIT workouts. If you select “Off,” you will hear no audio guidance during your workouts. To change the audio setting, first highlight AUDIO TRAINER and press the User/Enter button. Next, press the increase or decrease button beside the User/Enter button to select the desired audio setting. Then, press the User/Enter button.

You can adjust the volume of your personal trainer’s voice by highlighting VOLUME, pressing the User/Enter button, and then pressing the increase and decrease buttons beside the User/Enter button to select a volume setting. Then, press the Enter button.

The contrast of the display can also be adjusted. To adjust the contrast of the display, first highlight CONTRAST and press the User/Enter button. Next, press the increase and decrease buttons beside the User/Enter button to select a contrast setting. Then, press the User/Enter button.

The console can also display a welcome message each time you insert the key into the console. Highlight WELCOME SCREEN and press the User/Enter button. Then, press the increase or decrease button beside the User/Enter button to select ON or OFF and press the User/Enter button.

5. **When you are finished exercising, remove the key from the console.**

To exit the settings mode at any time, remove the key from the console.

Download from Www.Somanuals.com. All Manuals Search And Download.

HOW TO USE THE MANUAL MODE

1. **Insert the key into the console.**

   See HOW TO TURN ON THE POWER on page 12.

2. **Personalize console settings if desired.**

   See HOW TO PERSONALIZE CONSOLE SETTINGS on page 12.

3. **Select the manual mode.**

   Each time the key is inserted, the manual mode will be selected. If you have selected a program, press the Programs buttons repeatedly until the word MANUAL appears in the display.

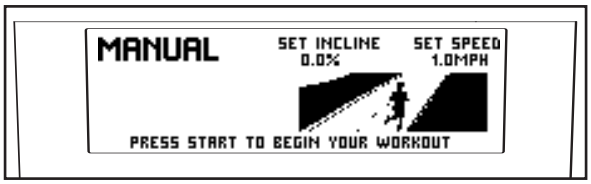

4. **Start the walking belt and adjust the speed.**

   To start the walking belt, press the Start button, the Speed + button, or one of the twelve 1 Step Speed buttons.

   If the Start button or the Speed + button is pressed, the walking belt will begin to move at 1 mph. As you exercise, change the speed of the walking belt as desired by pressing the Speed + and – buttons. Each time a button is pressed, the speed setting will change by 0.1 mph; if a button is held down, the speed setting will change in increments of 0.5 mph. If one of the twelve 1 Step Speed buttons is pressed, the walking belt will gradually increase in speed until it reaches the selected speed setting.

   To stop the walking belt, press the Stop button. To restart the walking belt, press the Start button, the Speed + button, or one of the twelve 1 Step Speed buttons.

5. **Change the incline of the treadmill as desired.**

   To change the incline of the treadmill, press the Incline increase or decrease button, or one of the twelve 1 Step Incline buttons. Each time one of the buttons is pressed, the incline will gradually adjust until it reaches the selected incline setting.

6. **Select a display mode and monitor your progress with the display and the training zone bar.**

   As you walk or run on the treadmill, the display can show the following workout information:

   - The elapsed time.
   - The distance that you have walked or run.
   - The speed of the walking belt.
   - The incline level of the treadmill.
   - The approximate number of calories you have burned.
   - The approximate number of grams of carbs you have burned.
   - Your heart rate. Note: Your heart rate can be displayed only while you use the handgrip pulse sensor or the optional chest pulse sensor.
   - In addition, the display can show a “workout history”—a profile that represents the speed settings that you select during your workout. At the beginning of each minute of your workout, an additional column will appear in the profile; as you increase or decrease the speed setting, the height of the column will increase or decrease.
   - The display can also show an animation of a runner on a road. As you increase or decrease the speed setting, the runner will speed up or slow down.

Download from Www.Somanuals.com. All Manuals Search And Download.

When the manual mode is selected, the console offers eight display modes. The display mode that you select will determine which workout information is shown. For example, the first display mode shows only the elapsed time and the distance that you have walked or run. Press the Display button repeatedly to select the desired display mode.

Note: Regardless of which display mode you select, the speed or incline setting will appear in the display for a few seconds each time you change the setting. In addition, your heart rate will appear in the display for up to 40 seconds each time you use the handgrip pulse sensor or put on the optional chest pulse sensor. Note: If you select the display mode shown below, your heart rate will be shown in place of the approximate number of grams of carbs you have burned.

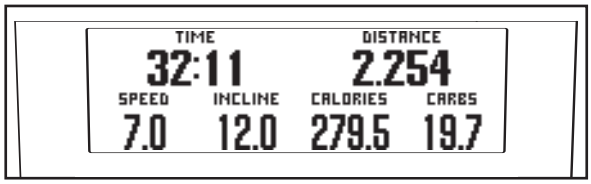

As you exercise, the training zone bar will indicate the approximate intensity level of your exercise. For example, if eight of the indicators in the bar are lit, the bar shows that your intensity level is ideal for aerobic exercise.

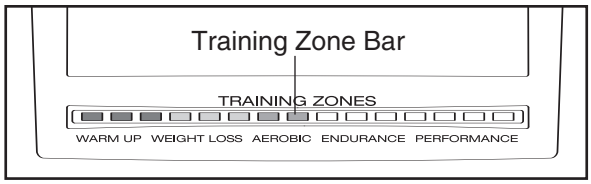

To reset the console, press the Stop button, remove the key, and then reinsert the key.

7. **Measure your heart rate if desired.**

Note: If you use the handgrip pulse sensor and the optional chest pulse sensor at the same time, the display will not show your heart rate accurately.

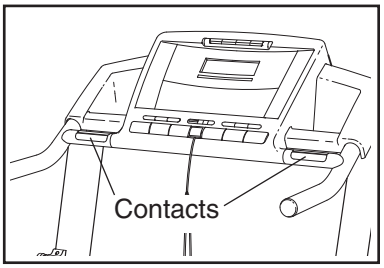

To use the handgrip pulse sensor, first remove the sheets of clear plastic from the metal contacts on the handgrip pulse sensor. Next, **stand on the foot rails** and hold the metal contacts—**avoid moving your hands**. When your pulse is detected, your heart rate will appear in the display. **For the most accurate heart rate reading, continue to hold the contacts for about 15 seconds.**

8. **Turn on the fan if desired.**

To turn on the fan at low speed, press the Fan button. To turn on the fan at medium speed, press the button a second time. To turn on the fan at high speed, press the button a third time. To select the auto fan mode, press the button a fourth time. When the auto fan mode is selected, the speed of the fan will automatically increase or decrease as the speed of the walking belt increases or decreases.

To turn off the fan, press the Fan button again. Note: If the fan is on when the walking belt stops, the fan will automatically turn off after a few minutes.

9. **When you are finished exercising, remove the key from the console.**

Step onto the foot rails, press the Stop button, and adjust the incline of the treadmill to the lowest setting. **The incline must be at the lowest setting when the treadmill is folded to the storage position or the treadmill will become damaged.** Next, remove the key from the console and put it in a secure place.

When you are finished using the treadmill, switch the reset/off circuit breaker to the "off" position and unplug the power cord.

Download from Www.Somanuals.com. All Manuals Search And Download.

HOW TO USE A CARDIO PROGRAM

1. **Insert the key into the console.**

   See HOW TO TURN ON THE POWER on page 12.

2. **Personalize console settings if desired.**

   See HOW TO PERSONALIZE CONSOLE SETTINGS on page 12.

3. **Select a Cardio program.**

   To select one of the ten Cardio programs, press the Programs button repeatedly.

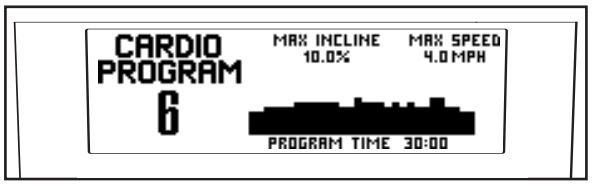

   When a Cardio program is selected, the display will show the name of the program, the program time, the maximum incline setting of the program, and the maximum speed setting of the program. In addition, a profile of the speed settings of the program will appear in the display.

   Each preset program is divided into 30, 50, or 60 one-minute segments. One speed setting and one incline setting are programmed for each segment. Note: The same speed setting and/or incline setting may be programmed for two or more consecutive segments.

4. **Press the Start button to start the program.**

   A moment after the button is pressed, the treadmill will automatically adjust to the first speed and incline settings of the program. Hold the handrails and begin walking.

5. **Select a display mode and monitor your progress with the display and the training zone bar.**

   When a Cardio program is selected, the console offers three display modes. Press the Display button repeatedly to select the desired display mode. **If the first or second display mode is selected,** a profile of the speed settings of the program will appear in the display. A small arrow below the profile will indicate your progress.

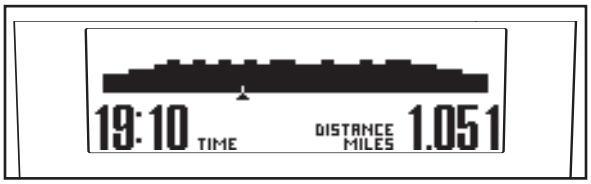

   At the end of the first one-minute segment of the program, a series of tones will sound. If a different speed setting and/or incline setting is programmed for the second segment, the speed setting and/or incline setting will appear at the top of the display for a moment to alert you. The treadmill will then automatically adjust to the speed and incline settings for the second segment.

   The program will continue in this way until the small arrow reaches the right end of the profile. The walking belt will then slow to a stop.

   If the third display mode is selected, the display will show an animation of a runner.

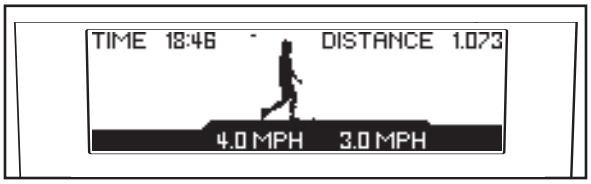

   At the end of the first one-minute segment of the program, a series of tones will sound. If a different speed setting is programmed for the second segment, the speed setting will move along the bottom of the display to alert you. If a different incline setting is programmed, the incline setting will appear at the top of the display for a moment. The treadmill will then automatically adjust to the speed and incline settings for the second segment.

   The program will continue in this way until the last segment ends. The walking belt will then slow to a stop.

Download from Www.Somanuals.com. All Manuals Search And Download.

If the speed or incline setting for the current segment is too high or too low, you can override the setting by pressing the Speed or Incline buttons; however, when the next segment begins, **the treadmill will automatically adjust to the speed and incline settings for the next segment.**

To stop the program at any time, press the Stop button. To restart the program, press the Start button. The walking belt will begin to move at 1 mph. When the next segment of the program begins, the treadmill will automatically adjust to the speed and incline settings for the next segment.

6. **Measure your heart rate if desired.**

   See step 7 on page 15.

7. **Turn on the fan if desired.**

   See step 8 on page 15.

8. **When you are finished exercising, remove the key from the console.**

   See step 9 on page 15.

Download from Www.Somanuals.com. All Manuals Search And Download.

HOW TO USE A PULSE PROGRAM

⚠ CAUTION: If you have heart problems, or if you are over 60 years of age and have been inactive, do not use the Pulse programs. If you are taking medication regularly, consult your physician to find whether the medication will affect your exercise heart rate.

Follow the steps below to use a Pulse program.

1. **Put on the optional chest pulse sensor.**

   Note: You must wear the optional chest pulse sensor to use a Pulse program.

2. **Insert the key into the console.**

   See HOW TO TURN ON THE POWER on page 12.

3. **Personalize console settings if desired.**

   See HOW TO PERSONALIZE CONSOLE SETTINGS on page 12.

4. **Select a Pulse program.**

   To select a Pulse program, press the Programs button repeatedly until the words PULSE PROGRAM 1 or PULSE PROGRAM 2 appear in the display.

   When a Pulse program is selected, the display will show the name of the program and the maximum target heart rate setting of the program. In addition, a profile of the target heart rate settings of the program will appear in the display.

   Pulse program 1 is divided into one-minute segments. The same target heart rate setting is programmed for all segments (except for the first two segments). Pulse program 2 is divided into 30 one-minute segments. One target heart rate setting is programmed for each segment. Note: The same target heart rate setting may be programmed for two or more consecutive segments.

5. **Adjust the maximum target heart rate setting if desired.**

   To adjust the maximum target heart rate setting, press the increase and decrease buttons beside the User/Enter button (see EXERCISE INTENSITY on page 28). To adjust the target heart rate setting quickly, hold down one of the buttons.

6. **Press the Start button to start the program.**

   A moment after the button is pressed, the walking belt will begin to move. Hold the handrails and begin walking.

7. **Select a display mode and monitor your progress with the display and the training zone bar.**

   When a Pulse program is selected, the console offers two display modes. Press the Display button to select the desired display mode.

   Regardless of which display mode you select, a profile of the target heart rate settings of the program will appear in the display. A white line representing your heartbeat will also appear; each time a heartbeat is detected, an additional peak will appear in the line. A small arrow below the profile will indicate your progress.

   During each one-minute segment of the program, the console will compare your heart rate to the current target heart rate setting. If your heart rate is too far below or above the target heart rate setting, the speed of the walking belt or the incline of the treadmill will automatically change to bring your heart rate closer to the target heart rate setting. Each time the speed or incline changes, the speed setting and the incline setting will appear at the top of the display for a moment to alert you.

   When each segment ends, a series of tones will sound.

Download from Www.Somanuals.com. All Manuals Search And Download.

If the speed or incline setting for the current segment is too high or too low, you can override the setting by pressing the Speed or Incline buttons; however, when the console compares your heart rate to the current target heart rate setting, the speed or incline of the treadmill may automatically change.

To stop the program at any time, press the Stop button. To restart the program, press the Start button. The walking belt will begin to move at 1 mph. When the console compares your heart rate to the current target heart rate setting, the speed or incline of the treadmill may automatically change.

If Pulse program 1 is selected, the program will continue until you stop it by pressing the Stop button. If Pulse program 2 is selected, the program will continue until the small arrow reaches the right end of the profile. The walking belt will then slow to a stop.

8. **Turn on the fan if desired.**

   See step 8 on page 15.

9. **When you are finished exercising, remove the key from the console.**

   See step 9 on page 15.

Download from Www.Somanuals.com. All Manuals Search And Download.

HOW TO CREATE A RECORD PROGRAM

1. **Insert the key into the console.**

   See HOW TO TURN ON THE POWER on page 12.

2. **Personalize console settings if desired.**

   See HOW TO PERSONALIZE CONSOLE SETTINGS on page 12.

3. **Select a Record program.**

   To select a Record program, press the Programs button repeatedly until the words RECORD PROGRAM 1 or RECORD PROGRAM 2 appear in the display.

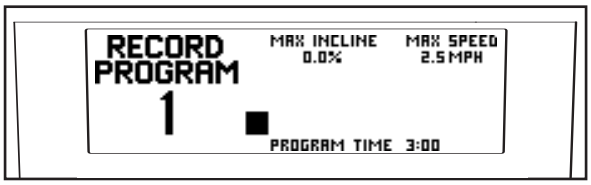

   If the Record program has not yet been defined, the display will show a program time of three minutes. If the program time is more than three minutes, see HOW TO USE A RECORD PROGRAM on page 21.

   Each Record program is divided into one-minute segments. One speed setting and one incline setting can be programmed for each segment.

4. **Press the Start button to start the program.**

   A moment after the button is pressed, the walking belt will begin to move. Hold the handrails and begin walking.

5. **Select a display mode and program the desired speed and incline settings.**

   When a Record program is selected, the console offers three display modes. Press the Display button repeatedly to select the desired display mode.

   To program a speed setting and an incline setting for the first one-minute segment of the program, simply adjust the speed and incline of the treadmill as desired by pressing the Speed and Incline buttons.

   When the first segment ends, a series of tones will sound and the current speed setting and the current incline setting will be saved in memory.

   Program a speed setting and an incline setting for the second segment as described above. Continue programming speed and incline settings for up to 30 segments.

   When you are finished with your workout, press the Stop button twice. The Record program will then be saved in memory.

6. **When you are finished exercising, remove the key from the console.**

   See step 9 on page 15.

Download from Www.Somanuals.com. All Manuals Search And Download.

HOW TO USE A RECORD PROGRAM

1. **Insert the key into the console.**

   See HOW TO TURN ON THE POWER on page 12.

2. **Personalize console settings if desired.**

   See HOW TO PERSONALIZE CONSOLE SETTINGS on page 12.

3. **Select a Record program.**

   To select a Record program, press the Programs button repeatedly until the words RECORD PROGRAM 1 or RECORD PROGRAM 2 appear in the display.

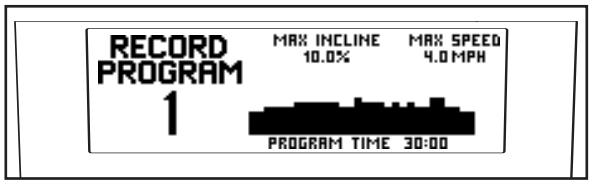

   When a Record program is selected, the display will show the name of the program, the maximum incline setting of the program, and the maximum speed setting. In addition, a profile of the speed settings of the program will appear in the display.

   Note: If the display shows a program time of three minutes, see HOW TO CREATE A RECORD PROGRAM on page 20.

   Each Record program is divided into one-minute segments. One speed setting and one incline setting are programmed for each segment.

4. **Press the Start button to start the program.**
   A moment after the button is pressed, the treadmill will automatically adjust to the first speed and incline settings that you programmed previously. Hold the handrails and begin walking.

5. **Select a display mode and monitor your progress with the display and the training zone bar.**

   The Record program will function in the same way as a Cardio program (see step 5 on pages 16 and 17).

   If desired, you can redefine the program while using it. **To change the speed or incline setting for the current segment,** simply press the Speed or Incline buttons. When the current segment ends, the new setting will be saved in memory. **To increase the length of the program,** first wait until the program ends. Then, press the Start button and program speed and incline settings for as many additional segments as desired; Record programs can have up to 30 segments. When you have added as many segments as desired, press the Stop button twice. **To decrease the length of the program,** press the Stop button twice at any time before the program ends.

6. **Measure your heart rate if desired.**

   See step 7 on page 15.

7. **Turn on the fan if desired.**

   See step 8 on page 15.

8. **When you are finished exercising, remove the key from the console.**

   See step 9 on page 15.

Download from Www.Somanuals.com. All Manuals Search And Download.

HOW TO USE AN IFIT CARD

1. **Insert the key into the console.**

   See HOW TO TURN ON THE POWER on page 12.

2. **Personalize console settings if desired.**

   See HOW TO PERSONALIZE CONSOLE SETTINGS on page 12.

3. **Insert an iFIT Card and select a program.**

   To use an iFIT program, insert an iFIT Card into the iFIT slot; make sure that the iFIT Card is oriented so the metal contacts are face-down and are inserted into the iFIT slot.

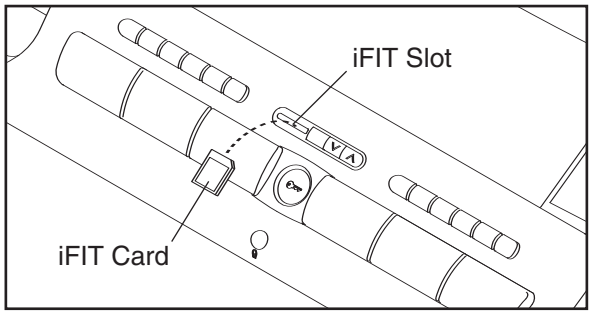

   Next, select an iFIT program by pressing the iFIT increase and decrease buttons (next to the lit iFIT indicator). When an iFIT program is selected, the display will show the name of the program, the maximum incline setting and the maximum speed setting of the program, and the program time. In addition, a profile of the speed settings of the program will appear in the display.

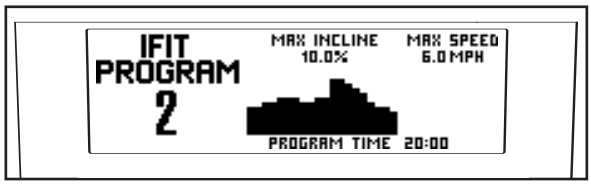

   Each preset program is divided into several one-minute segments. One speed setting and one incline setting are programmed for each segment. Note: The same speed setting and/or incline setting may be programmed for two or more consecutive segments.

4. **Press the Start button to start the program.**

   A moment after the button is pressed, the treadmill will automatically adjust to the first speed and incline settings of the program. Hold the handrails and begin walking.

5. **Select a display mode and monitor your progress with the display and the training zone bar.**

   When an iFIT program is selected, the console offers three display modes (see step 6 on pages 14 and 15). Press the Display button repeatedly to select the desired display mode. **If the first or second display mode is selected,** a profile of the speed settings of the program will appear in the display. A small arrow below the profile will indicate your progress.

   During the program, a personal trainer will guide you through the workout. You can adjust the volume or select an audio setting for your personal trainer (see step 4 on page 13).

   If the speed or incline setting for the current segment is too high or too low, you can override the setting by pressing the Speed or Incline buttons; however, when the next segment begins, **the treadmill will automatically adjust to the speed and incline settings for the next segment.**

   To stop the program at any time, press the Stop button. To restart the program, press the Start button. The walking belt will begin to move at 1 mph. When the next segment of the program begins, the treadmill will automatically adjust to the speed and incline settings for the next segment.

6. **Turn on the fan if desired.**

   See step 8 on page 15.

7. **When you are finished exercising, remove the key from the console.**

   See step 9 on page 15.

   CAUTION: Always remove iFIT Cards from the iFIT slot when you are not using them.

Download from Www.Somanuals.com. All Manuals Search And Download.

HOW TO USE THE STEREO SOUND SYSTEM

To play music or audio books through the console's stereo speakers, you must connect your MP3 player or CD player to the console. Locate the stereo audio cable below the speakers on the console, and plug it into a jack on your MP3 player or CD player. **Make sure that the audio cable is fully plugged in.**

Next, press the Play button on your MP3 player or CD player. Then, adjust the volume of your MP3 player or CD player.

If you are using a portable CD player and the CD skips, set the CD player on the floor or another flat surface instead of on the console.

THE OPTIONAL CHEST PULSE SENSOR

An optional chest pulse sensor offers hands-free operation as it monitors your heart rate during your workouts. **To purchase the optional chest pulse sensor, call the toll-free telephone number on the front cover of this manual.**

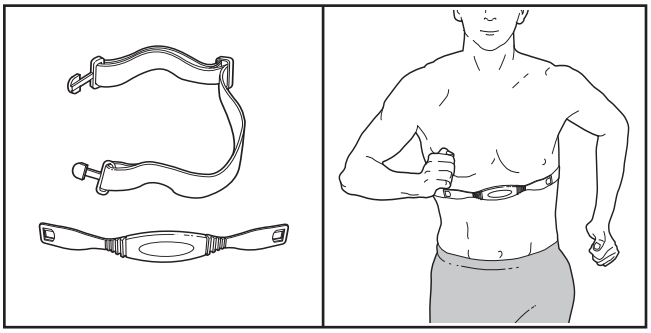

Download from Www.Somanuals.com. All Manuals Search And Download.

HOW TO FOLD AND MOVE THE TREADMILL

HOW TO FOLD THE TREADMILL FOR STORAGE

Before folding the treadmill, adjust the incline to the lowest position. If this is not done, the treadmill may be permanently damaged. Remove the key and unplug the power cord. CAUTION: You must be able to safely lift 45 lbs. (20 kg) to raise, lower, or move the treadmill.

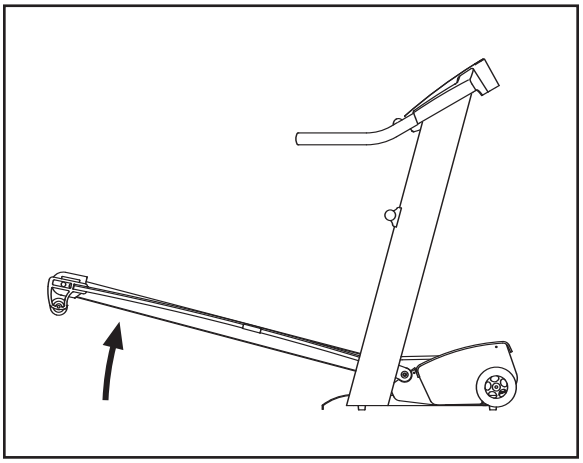

1. Hold the frame with your hands in the location shown by the arrow at the right. **CAUTION: To decrease the possibility of injury, bend your legs and keep your back straight. As you raise the frame, make sure to lift with your legs rather than your back.** Raise the frame about halfway to the vertical position.

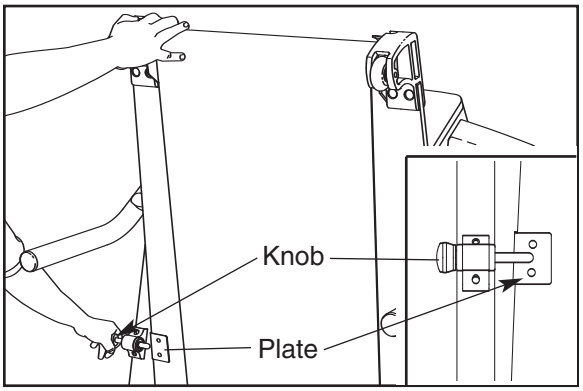

2. Move your right hand to the position shown and hold the treadmill firmly. Pull the latch knob to the left and hold it. Raise the frame until the plate passes the pin on the latch knob. Release the latch knob. **Make sure that the plate is resting against the pin as shown.**

   To protect the floor or carpet from damage, place a mat under the treadmill. Keep the treadmill out of direct sunlight. Do not leave the treadmill in the storage position in temperatures above 85° (30º C).

HOW TO MOVE THE TREADMILL

Before moving the treadmill, convert the treadmill to the storage position as described above. **Make sure that the plate is securely held by the pin on the lock knob.**

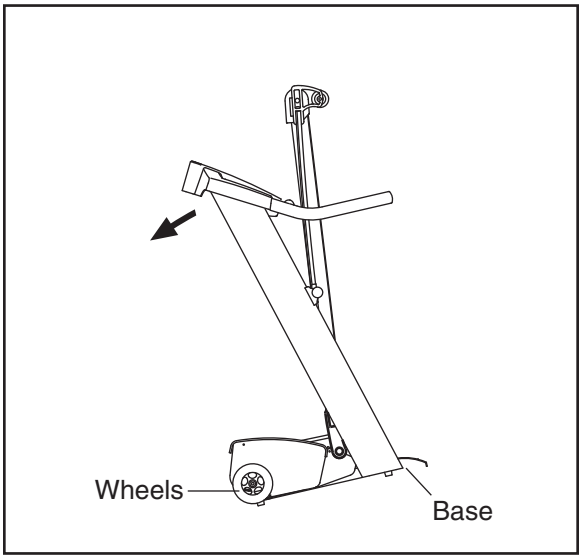

1. Hold the handrails and place one foot against a wheel.

2. Tilt the treadmill back until it rolls freely on the wheels. Carefully move the treadmill to the desired location. **Never move the treadmill without tipping it back. To reduce the risk of injury, use extreme caution while moving the treadmill. Do not attempt to move the treadmill over an uneven surface.**

3. Place one foot against a wheel, and carefully lower the treadmill until it is resting in the storage position.

Download from Www.Somanuals.com. All Manuals Search And Download.

HOW TO LOWER THE TREADMILL FOR USE

1. Hold the upper end of the frame with your right hand as shown. Using your left hand, pull the latch knob to the left and hold it. Pivot the frame down until it is past the pin on the latch knob.

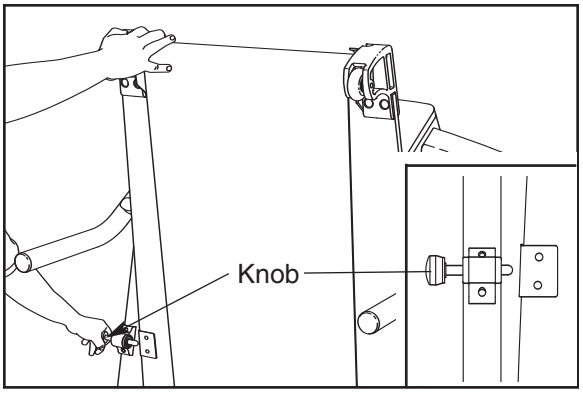

2. Hold the frame firmly with both hands, and lower it to the floor. **To decrease the possibility of injury, bend your legs and keep your back straight.**

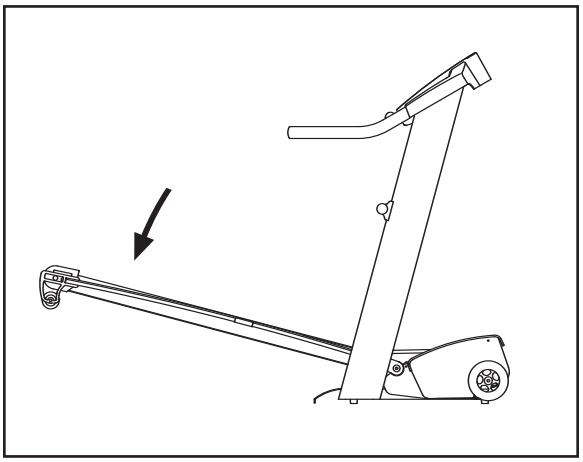

Download from Www.Somanuals.com. All Manuals Search And Download.

TROUBLESHOOTING

Most treadmill problems can be solved by following the steps below. Find the symptom that applies, and follow the steps listed. If further assistance is needed, please see the front cover of this manual.

PROBLEM: The power does not turn on

SOLUTION: a. Make sure that the power cord is plugged into a surge suppressor, and that the surge suppressor is plugged into a properly grounded outlet (see page 10). Use only a single-outlet surge suppressor that meets all of the specifications described on page 10. Important: The treadmill is not compatible with GFCI-equipped outlets.

b. After the power cord has been plugged in, make sure that the key is inserted into the console.

c. Check the reset/off circuit breaker located on the treadmill frame near the power cord. If the switch protrudes as shown, the circuit breaker has tripped. To reset the circuit breaker, wait for five minutes and then press the switch to the reset position.

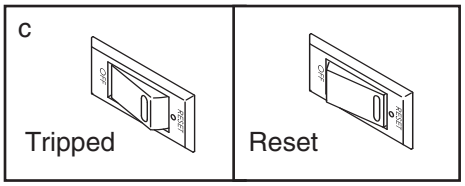

PROBLEM: The power turns off during use

SOLUTION: a. Check the reset/off circuit breaker (see the drawing above). If the circuit breaker has tripped, wait for five minutes and then press the switch to the reset position.

b. Make sure that the power cord is plugged in. If the power cord is plugged in, unplug it, wait for five minutes, and then plug it back in.

c. Remove the key from the console. Reinsert the key into the console.

d. If the treadmill still will not run, please see the front cover of this manual.

PROBLEM: The displays of the console do not function properly

SOLUTION: a. Remove the key from the console and **unplug the power cord.** Carefully tip the treadmill down as shown in drawing a. Remove the Belly Pan Screws (85) from the Motor Hood (33). Raise the Upright (20) and carefully remove the Motor Hood.

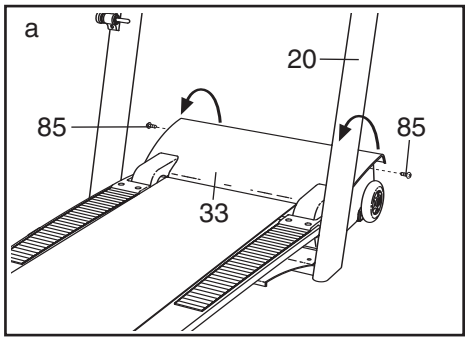

Locate the Reed Switch (22) and the Magnet (18) on the left side of the Pulley (17). Turn the Pulley until the Magnet is aligned with the Reed Switch. **Make sure that the gap between the Magnet and the Reed Switch is about 1/8" (3 mm).** If necessary, loosen the Screw (87), move the Reed Switch slightly, and then retighten the Screw. Reattach the Motor Hood (33) with the Screws (87). Run the treadmill for a few minutes to check for a correct speed reading.

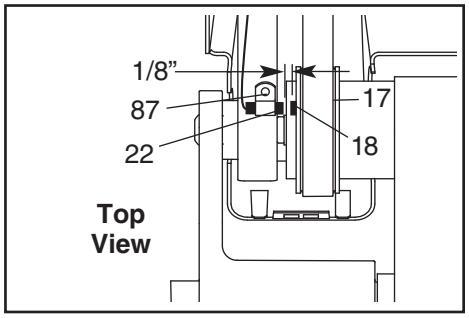

Download from Www.Somanuals.com. All Manuals Search And Download.

PROBLEM: The walking belt slows when walked on

SOLUTION: a. Use only a single-outlet surge suppressor that meets all of the specifications described on page 10.

b. If the walking belt is overtightened, treadmill performance may decrease and the walking belt may become damaged. Remove the key and **UNPLUG THE POWER CORD**. Using the hex key, turn both rear roller bolts counterclockwise, 1/4 of a turn. When the walking belt is properly tightened, you should be able to lift each edge of the walking belt 3 to 4 inches (7–10 cm) off the walking platform. Be careful to keep the walking belt centered. Then, plug in the power cord, insert the key, and run the treadmill for a few minutes. Repeat until the walking belt is properly tightened.

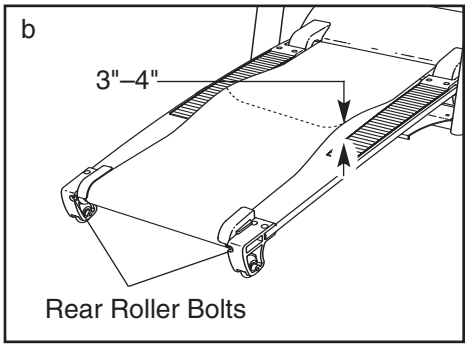

c. If the walking belt still slows when walked on, see the front cover of this manual.

PROBLEM: The walking belt is off-center or slips when walked on

SOLUTION: a. If the walking belt is off-center, remove the key and **UNPLUG THE POWER CORD**. **If the walking belt has shifted to the left,** use the hex key to turn the left rear roller bolt clockwise 1/2 of a turn; **if the walking belt has shifted to the right,** turn the left rear roller bolt counterclockwise 1/2 of a turn. Be careful not to overtighten the walking belt. Then, plug in the power cord, insert the key, and run the treadmill for a few minutes. Repeat until the walking belt is centered.

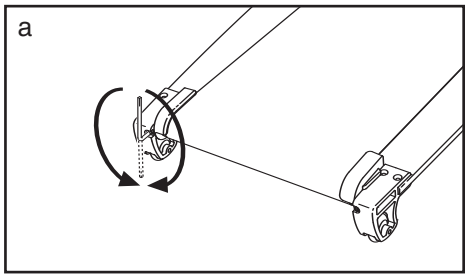

b. If the walking belt slips when walked on, first remove the key and **UNPLUG THE POWER CORD**. Using the hex key, turn both rear roller bolts clockwise, 1/4 of a turn. When the walking belt is correctly tightened, you should be able to lift each edge of the walking belt 3 to 4 inches (7–10 cm) off the walking platform. Be careful to keep the walking belt centered. Plug in the power cord, insert the key, and carefully walk on the treadmill for a few minutes. Repeat until the walking belt is properly tightened.

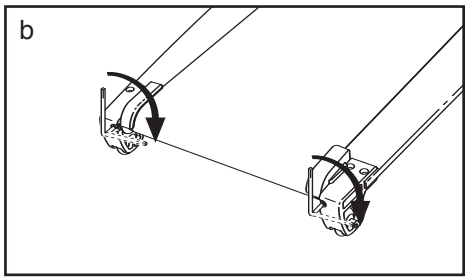

PROBLEM: The incline of the treadmill does not change correctly

SOLUTION: a. With the key in the console, press one of the Incline buttons. **While the incline is changing, remove the key.** After a few seconds, re-insert the key. The treadmill will automatically rise to the maximum incline level and then return to the minimum level. This will recalibrate the incline system.

Download from Www.Somanuals.com. All Manuals Search And Download.

EXERCISE GUIDELINES

⚠WARNING: Before beginning this or any exercise program, consult your physician. This is especially important for individuals over the age of 35 or individuals with pre-existing health problems.

The pulse sensor is not a medical device. Various factors, including your movement, may affect the accuracy of heart rate readings. The sensor is intended only as an exercise aid in determining heart rate trends in general.

The following guidelines will help you to plan your exercise program. For more detailed exercise information, obtain a reputable book or consult your physician.

EXERCISE INTENSITY

Whether your goal is to burn fat or to strengthen your cardiovascular system, the key to achieving the desired results is to exercise with the proper intensity. The proper intensity level can be found by using your heart rate as a guide. The chart below shows recommended heart rates for fat burning and aerobic exercise.

165	*155*	*145*	*140*	*130*	*125*	*115*	💗
145	*138*	*130*	*125*	*118*	*110*	*103*	💗
125	*120*	*115*	*110*	*105*	*95*	*90*	♥
20	*30*	*40*	*50*	*60*	*70*	*80*	

To find the proper heart rate for you, first find your age near the bottom of the chart (ages are rounded off to the nearest ten years). Next, find the three numbers above your age. The three numbers define your "training zone." The lower two numbers are recommended heart rates for fat burning; the higher number is the recommended heart rate for aerobic exercise.

To measure your heart rate during exercise, use the pulse sensor on the console.

Fat Burning

To burn fat effectively, you must exercise at a relatively low intensity level for a sustained period of time. During the first few minutes of exercise, your body uses easily accessible *carbohydrate calories* for energy. Only after the first few minutes does your body begin to use stored *fat calories* for energy. If your goal is to burn fat, adjust the speed and incline of the treadmill until your heart rate is near the lowest number in your training zone.

For maximum fat burning, adjust the speed and incline of the treadmill until your heart rate is near the middle number in your training zone.

Aerobic Exercise

If your goal is to strengthen your cardiovascular system, your exercise must be "aerobic." Aerobic exercise is activity that requires large amounts of oxygen for prolonged periods of time. This increases the demand on the heart to pump blood to the muscles, and on the lungs to oxygenate the blood. For aerobic exercise, adjust the speed and incline of the treadmill until your heart rate is near the highest number in your training zone.

WORKOUT GUIDELINES

Each workout should include the following three parts:

A Warm-up—Start each workout with 5 to 10 minutes of stretching and light exercise. A proper warm-up increases your body temperature, heart rate and circulation in preparation for exercise.

Training Zone Exercise—After warming up, increase the intensity of your exercise until your pulse is in your training zone for 20 to 60 minutes. (During the first few weeks of your exercise program, do not keep your pulse in your training zone for longer than 20 minutes.) Breathe regularly and deeply as you exercise—never hold your breath.

A Cool-down—Finish each workout with 5 to 10 minutes of stretching to cool down. This will increase the flexibility of your muscles and will help prevent post-exercise problems.

EXERCISE FREQUENCY

To maintain or improve your condition, complete three workouts each week, with at least one day of rest between workouts. After a few months, you may complete up to five workouts each week if desired. The key to success is to make exercise a regular and enjoyable part of your everyday life.

Download from Www.Somanuals.com. All Manuals Search And Download.

SUGGESTED STRETCHES

The correct form for several basic stretches is shown at the right. Move slowly as you stretch—never bounce.

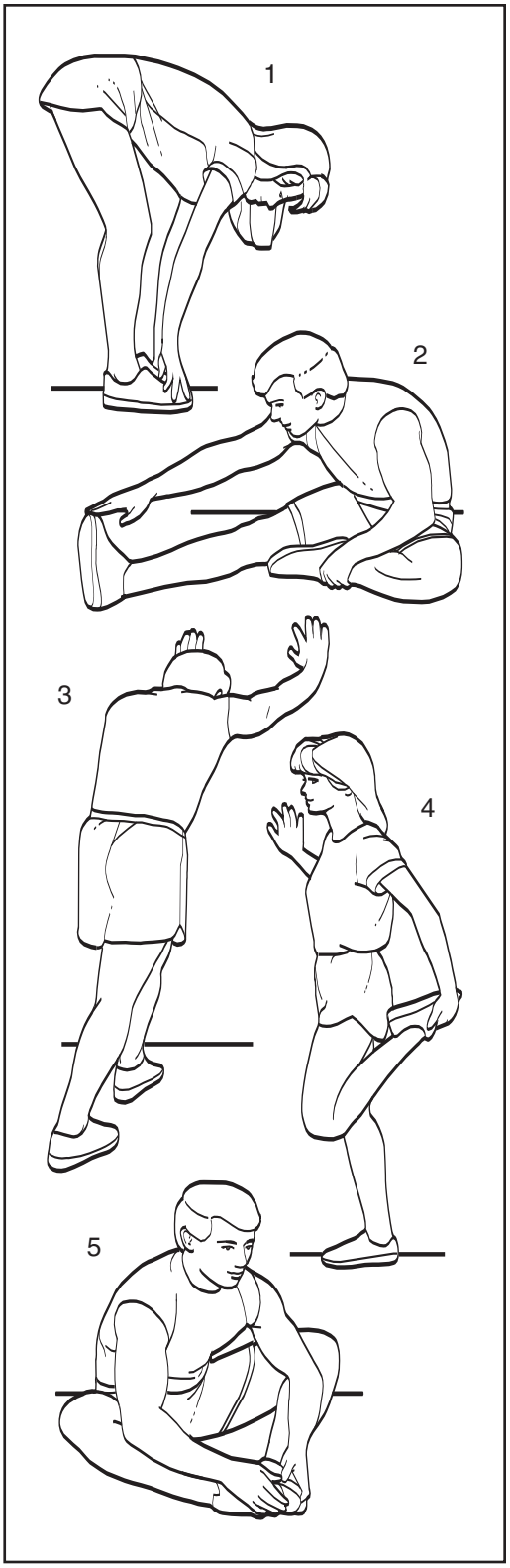

1. Toe Touch Stretch

Stand with your knees bent slightly and slowly bend forward from your hips. Allow your back and shoulders to relax as you reach down toward your toes as far as possible. Hold for 15 counts, then relax. Repeat 3 times. Stretches: Hamstrings, back of knees and back.

2. Hamstring Stretch

Sit with one leg extended. Bring the sole of the opposite foot toward you and rest it against the inner thigh of your extended leg. Reach toward your toes as far as possible. Hold for 15 counts, then relax. Repeat 3 times for each leg. Stretches: Hamstrings, lower back and groin.

3. Calf/Achilles Stretch

With one leg in front of the other, reach forward and place your hands against a wall. Keep your back leg straight and your back foot flat on the floor. Bend your front leg, lean forward and move your hips toward the wall. Hold for 15 counts, then relax. Repeat 3 times for each leg. To cause further stretching of the achilles tendons, bend your back leg as well. Stretches: Calves, achilles tendons and ankles.

4. Quadriceps Stretch

With one hand against a wall for balance, reach back and grasp one foot with your other hand. Bring your heel as close to your buttocks as possible. Hold for 15 counts, then relax. Repeat 3 times for each leg. Stretches: Quadriceps and hip muscles.

5. Inner Thigh Stretch

Sit with the soles of your feet together and your knees outward. Pull your feet toward your groin area as far as possible. Hold for 15 counts, then relax. Repeat 3 times. Stretches: Quadriceps and hip muscles.

Download from Www.Somanuals.com. All Manuals Search And Download.

PART LIST—Model No. 30705.0

R0807A

To locate the parts listed below, see the EXPLODED DRAWING near the end of this manual.

Key No.	Qty.	Description
1	2	Frame Thrust Washer
2	8	Endcap Bolt
3	1	Front Left Endcap
4	2	Frame Pivot Washer
5	8	Endcap Washer
6	1	Latch Warning Decal
7	27	Screw
8	1	Latch Plate
9	8	Endcap Nut
10	1	Front Right Endcap
11	2	Endcap Spring
12	2	Belt Guide
13	1	French Latch Warning
14	2	Frame Pivot Bolt
15	1	Walking Platform
16	1	Walking Belt
17	1	Front Roller/Pulley
18	1	Magnet
19	2	Frame Spacer
20	1	Upright
21	1	Reed Switch Clip
22	1	Reed Switch
23	17	1/2" Screw
24	4	Wire Clamp
25	1	Drive Motor
26	5	Hood Mount
27	2	Bolt
28	1	Left Rear Endcap
29	1	Left Roller Guard
30	2	Hood Mount (Side)
31	2	Motor Bolt
32	7	Nut
33	1	Motor Hood
34	1	Latch Housing
35	1	Right Roller Guard
36	1	Right Rear Endcap
37	1	Support Bracket Screw
38	8	Front Roller Adjustment Bolt
39	1	Front Roller Nut
40	1	Incline Motor
41	1	Incline Motor Bolt, Lower
42	1	Transformer
43	1	Controller
44	1	Foot Pad (Left)
45	1	Belly Pan
46	1	Power Cord Grommet
47	1	Power Cord
48	1	Off/Reset Circuit Breaker
49	1	Support Bracket
50	3	Tie Holder
51	1	Releasable Tie
52	4	Plastic Tie
53	4	Support Bracket Screw
54	1	Incline Stop Bracket
55	1	Incline Motor Bolt, Upper
56	1	Drive Roller Ground Wire
57	1	Idler Arm Spring
58	1	Idler Arm
59	2	Rear Wheel
60	2	Rear Roller Star Washer
61	2	Spring Washer
62	2	Rear Roller Bolt
63	1	Lift Frame
64	1	Rear Roller
65	1	Foot Pad (Right)
66	2	Handrail Endcap
67	4	Star Washer
68	1	Handrail
69	2	Latch Plate Screw
70	3	Cage Nut
71	1	Hex Key
72	4	Handrail Bolt
73	1	Upright Wire Harness
74	1	Base Plate Edging
75	1	Base Plate
76	1	Latch Assembly
77	3	Base Plate Bolt
78	1	Electronics Bracket
79	1	Idler Arm Bushing
80	1	Idler Arm Bolt
81	4	Base Pad
82	4	1" Tek Screw
83	1	Filter Wire
84	1	Idler Pulley Bolt
85	2	Belly Pan Screw
86	1	Drive Belt
87	8	Screw
88	4	Wheel Washer
89	2	Front Wheel
90	1	Upright Ground Wire
91	1	Idler Arm Washer
92	1	Electronics Bracket Star Washer
93	1	iFIT Card Kit
94	2	Wheel Spacer
95	1	Access Door
96	2	Wheel Bushing
97	1	Idler Pulley
98	1	Console Base
99	2	Hood Clip
100	1	Fan
101	1	Belly Pan Grommet
102	1	Hole Plug

Download from Www.Somanuals.com. All Manuals Search And Download.

Key No.	Qty.	Description
103	1	Key/Clip
104	2	Front Wheel Bolt
105	1	Console
106	1	Support Bracket
107	4	Fan Screw
*	–	4" Black Wire, M/F
*	–	6" Blue Wire, 2F
*	–	4" Red Wire, M/F
*	–	User's Manual

*These parts are not illustrated.
Specifications are subject to change without notice.

Download from Www.Somanuals.com. All Manuals Search And Download.

EXPLODED DRAWING A—Model No. 30705.0

R0807A

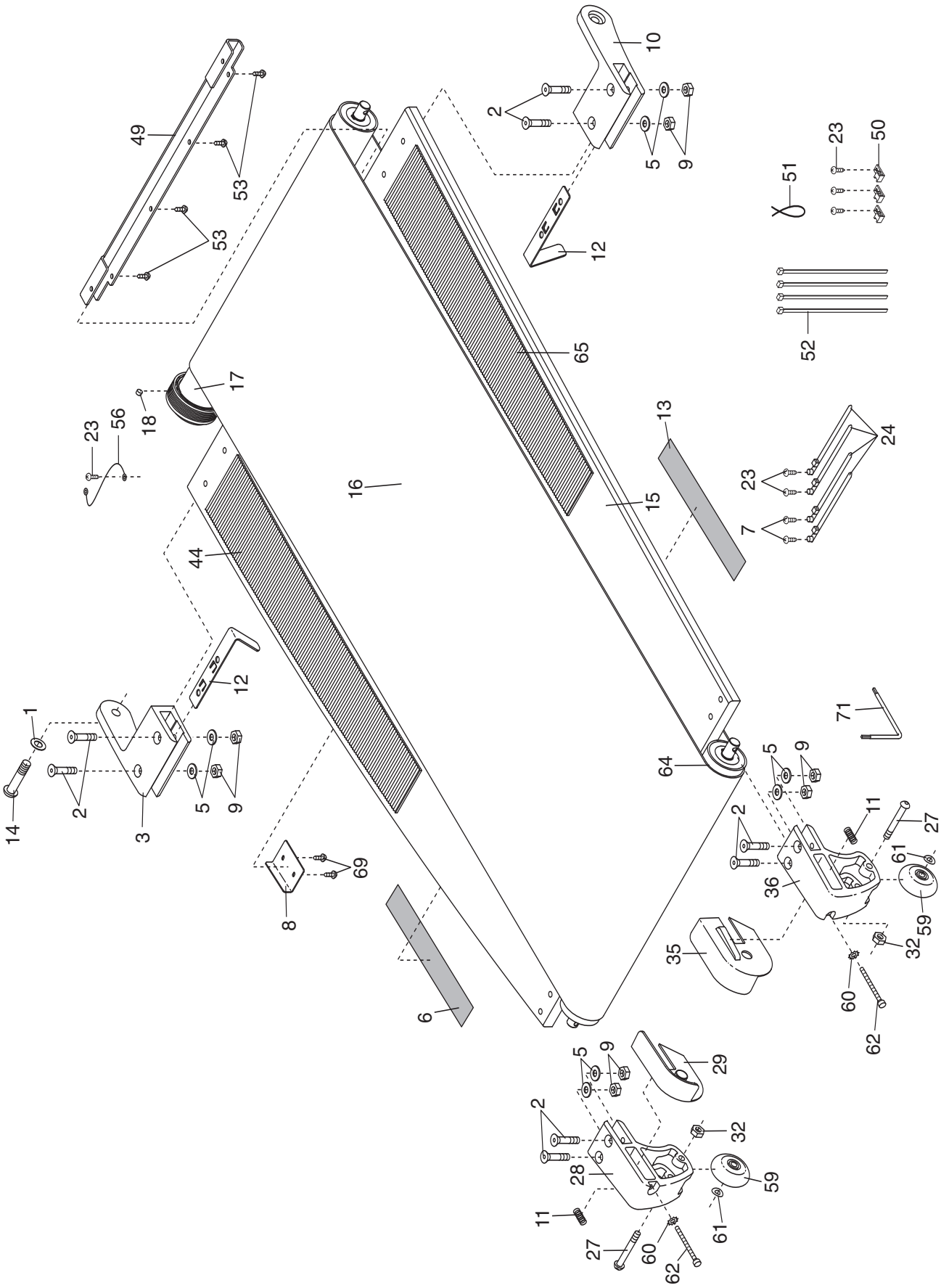

Download from Www.Somanuals.com. All Manuals Search And Download.

EXPLODED DRAWING B—Model No. 30705.0

R0807A

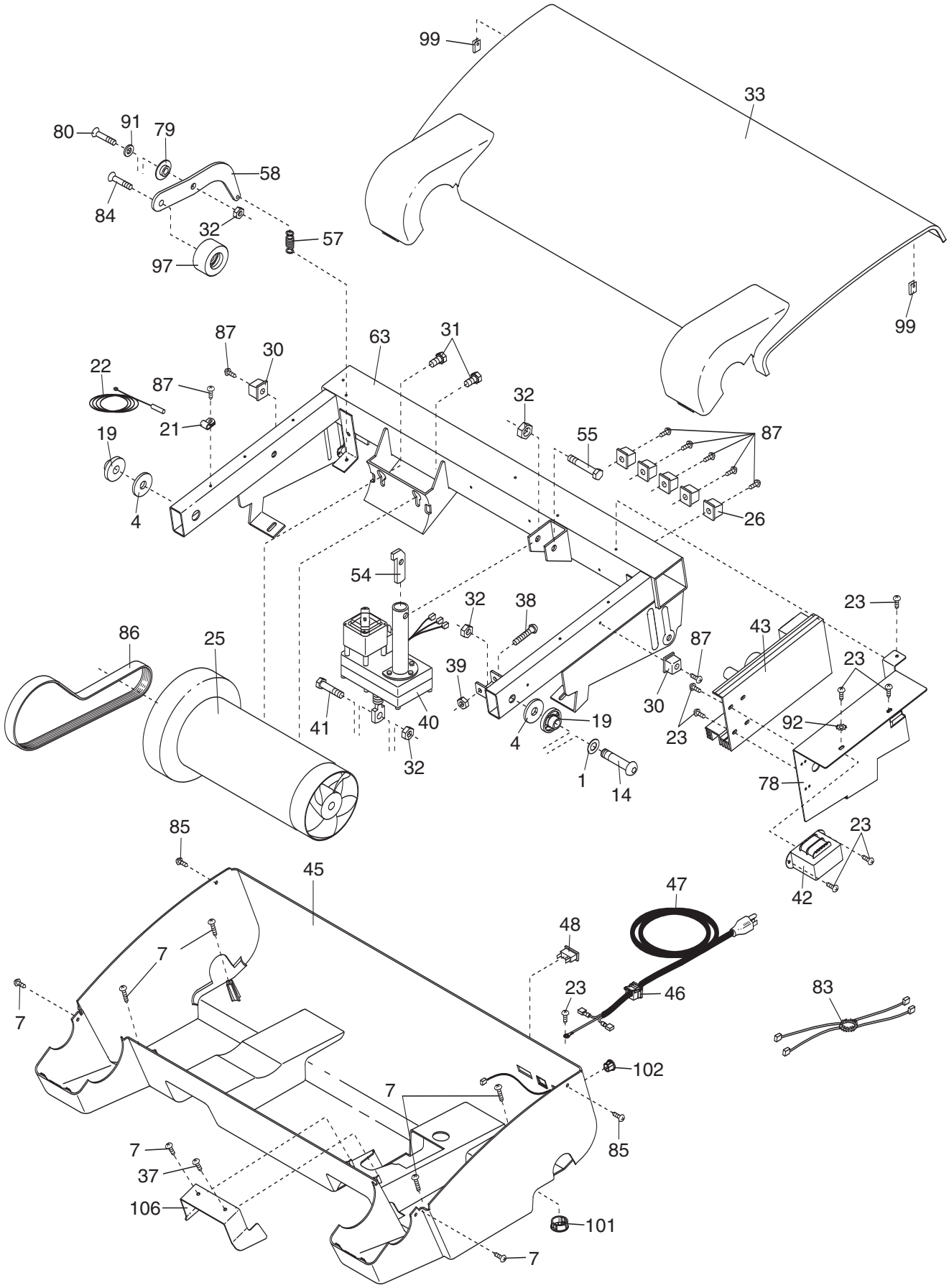

Download from Www.Somanuals.com. All Manuals Search And Download.

EXPLODED DRAWING C—Model No. 30705.0

R0807A

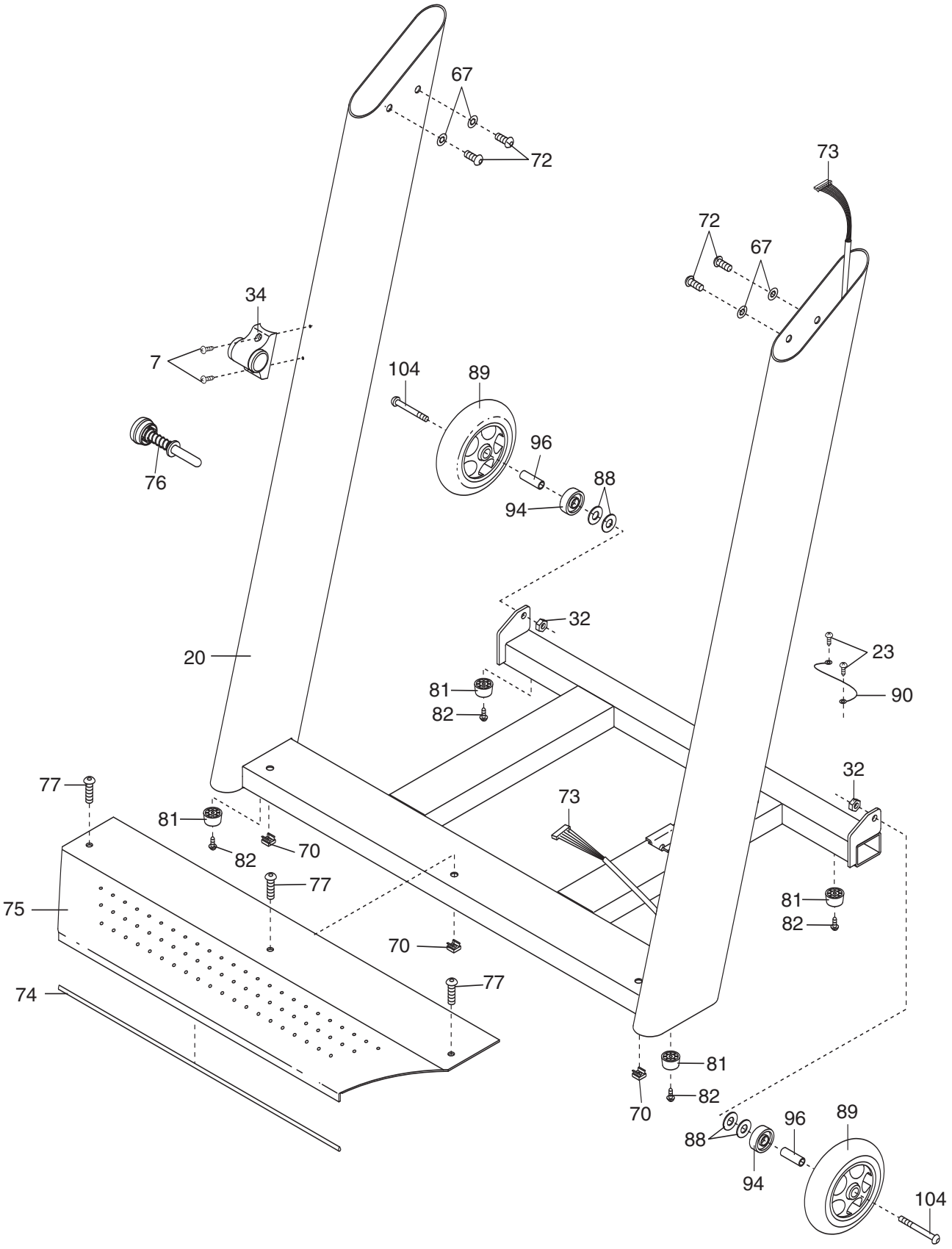

Download from Www.Somanuals.com. All Manuals Search And Download.

EXPLODED DRAWING D—Model No. 30705.0

R0807A

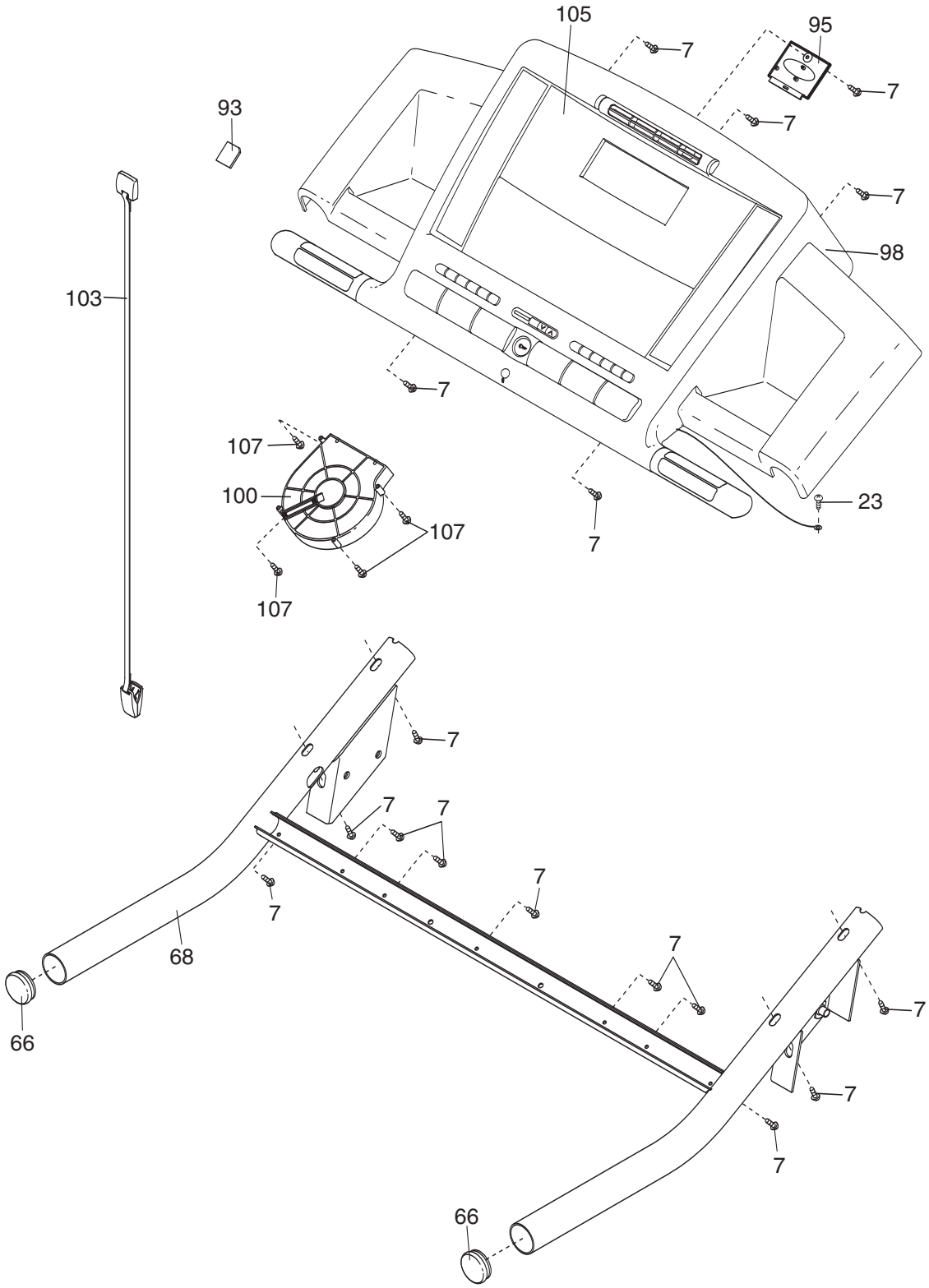

Download from Www.Somanuals.com. All Manuals Search And Download.

ORDERING REPLACEMENT PARTS

To order replacement parts, please see the front cover of this manual. To help us assist you, be prepared to provide the following information when contacting us:

- the model number and serial number of the product (see the front cover of this manual)
- the name of the product (see the front cover of this manual)
- the key number and description of the replacement part(s) (see the PART LIST and the EXPLODED DRAWING near the end of this manual)

LIMITED WARRANTY

ICON OF CANADA, INC. (ICON) warrants this product to be free from defects in workmanship and material, under normal use and service conditions. The frame is warranted for ten (10) years after the date of purchase. The drive motor is warranted for three (3) year after the date of purchase. Parts and labor are warranted for one (1) year after the date of purchase.

This warranty extends only to the original purchaser. ICON's obligation under this warranty is limited to replacing or repairing, at ICON's option, the product through one of its authorized service centers. All repairs for which warranty claims are made must be pre-authorized by ICON. If the product is shipped to a service center, freight charges to and from the service center will be the customer's responsibility. For in-home service, the customer will be responsible for a minimal trip charge. This warranty does not extend to any product or damage to a product caused by or attributable to freight damage, abuse, misuse, improper or abnormal usage or repairs not provided by an ICON authorized service center; products used for commercial or rental purposes; or products used as store display models. No other warranty beyond that specifically set forth above is authorized by ICON.

ICON is not responsible or liable for indirect, special or consequential damages arising out of or in connection with the use or performance of the product or damages with respect to any economic loss, loss of property, loss of revenues or profits, loss of enjoyment or use, costs of removal or installation or other consequential damages of whatsoever nature. Some provinces do not allow the exclusion or limitation of incidental or consequential damages. Accordingly, the above limitation may not apply to you.

The warranty extended hereunder is in lieu of any and all other warranties and any implied warranties of merchantability or fitness for a particular purpose is limited in its scope and duration to the terms set forth herein. Some provinces do not allow limitations on how long an implied warranty lasts. Accordingly, the above limitation may not apply to you.

This warranty gives you specific legal rights. You may also have other rights which vary from province to province.

ICON OF CANADA, INC., 900 de l'Industrie, St. Jerôme, QC J7Y 4B8

Part No. 253245 R0807A

Printed in Canada © 2007 ICON IP, Inc.

Download from Www.Somanuals.com. All Manuals Search And Download.

Free Manuals Download Website

http://myh66.com

http://usermanuals.us

http://www.somanuals.com

http://www.4manuals.cc

http://www.manual-lib.com

http://www.404manual.com

http://www.luxmanual.com

http://aubethermostatmanual.com

Golf course search by state

http://golfingnear.com

Email search by domain

http://emailbydomain.com

Auto manuals search

http://auto.somanuals.com

TV manuals search

http://tv.somanuals.com