Model No. NMTL06902
Serial No. _____

Find the serial number in the location shown below. Write the serial number in the space above for reference.

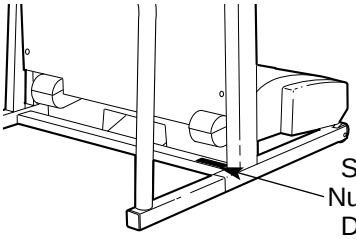

NordicTrack®
CMX500

USER'S MANUAL

QUESTIONS?

As a manufacturer, we are committed to providing complete customer satisfaction. If you have questions, or if there are missing or damaged parts, please contact the establishment where you purchased this treadmill.

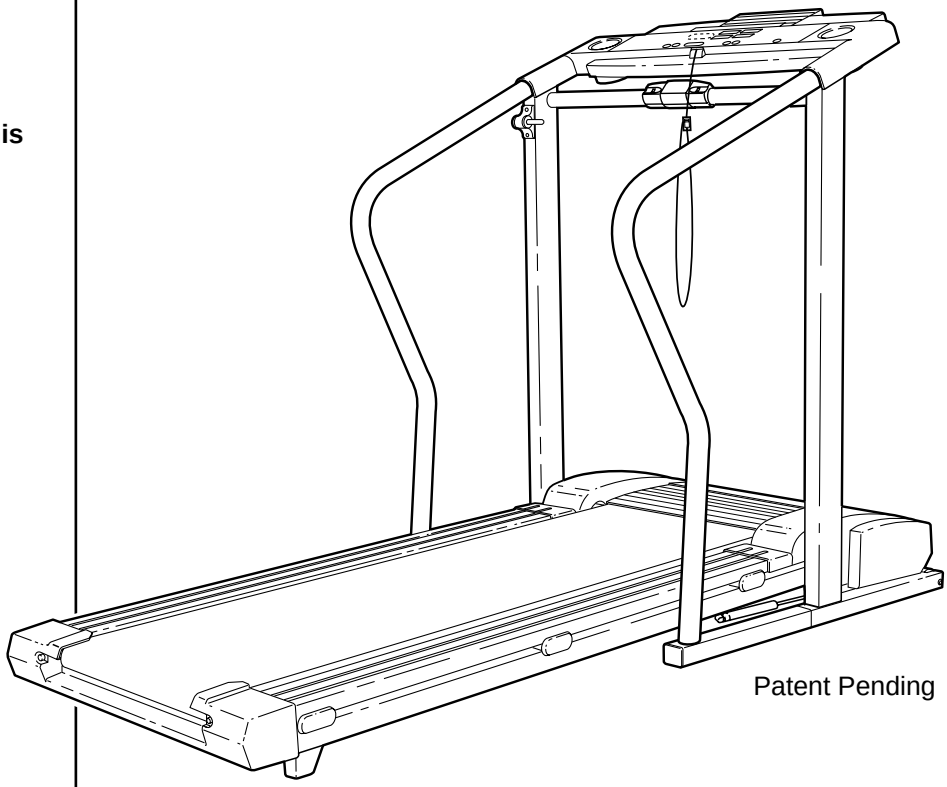

Patent Pending

⚠ CAUTION

Read all precautions and instructions in this manual before using this equipment. Save this manual for future reference.

Visit our website at

www.proform.com

new products, prizes, fitness tips, and much more!

Download from Www.Somanuals.com. All Manuals Search And Download.

NordicTrack®

CMX500

TABLE OF CONTENTS

IMPORTANT PRECAUTIONS 3
BEFORE YOU BEGIN 5
ASSEMBLY 6
OPERATION AND ADJUSTMENT 8
HOW TO FOLD AND MOVE THE TREADMILL 19
TROUBLE-SHOOTING 20
CONDITIONING GUIDELINES 22
PART LIST 23
ORDERING REPLACEMENT PARTS . . . . . Back Cover

Note: An EXPLODED DRAWING is attached in the center of this manual.

Download from Www.Somanuals.com. All Manuals Search And Download.

IMPORTANT PRECAUTIONS

⚠ WARNING: To reduce the risk of burns, fire, electric shock, or injury to persons, read the following important precautions and information before operating the treadmill.

1. **It is the responsibility of the owner to ensure that all users of this treadmill are adequately informed of all warnings and precautions.**
2. **Use the treadmill only as described in this manual.**
3. **Place the treadmill on a level surface, with at least eight feet of clearance behind it. Do not place the treadmill on any surface that blocks air openings. To protect the floor or carpet from damage, place a mat under the treadmill.**
4. **Keep the treadmill indoors, away from moisture and dust. Do not put the treadmill in a garage or covered patio, or near water.**
5. **Do not operate the treadmill where aerosol products are used or where oxygen is being administered.**
6. **Keep children under the age of 12 and pets away from the treadmill at all times.**
7. **The treadmill should not be used by persons weighing more than 114 m (250 lbs.).**
8. **Never allow more than one person on the treadmill at a time.**
9. **Wear appropriate exercise clothing when using the treadmill. Do not wear loose clothing that could become caught in the treadmill. Athletic support clothes are recommended for both men and women. *Always wear athletic shoes. Never use the treadmill with bare feet, wearing only stockings, or in sandals.***
10. **When connecting the power cord (see page 8), plug the power cord into a surge protector (not included) and plug the surge protector into a grounded circuit capable of carrying 15 or more amps. No other appliance should be on the same circuit. Do not use an extension cord.**
11. **Use only a UL-listed surge protector, rated at 15 amps, with a 1 mm² (14-gauge) cord of 1.5 m (5 ft.) or less in length. Do not use an extension cord.**
12. **Keep the power cord and the surge suppressor away from heated surfaces.**
13. **Never move the walking belt while the power is turned off. Do not operate the treadmill if the power cord or plug is damaged, or if the treadmill is not working properly. (See BEFORE YOU BEGIN on page 5 if the treadmill is not working properly.)**
14. **Never start the treadmill while you are standing on the walking belt. Always hold the handrails while using the treadmill.**
15. **The treadmill is capable of high speeds. Adjust the speed in small increments to avoid sudden jumps in speed.**
16. **The pulse sensor is not a medical device. Various factors, including the user's movement, may affect the accuracy of heart rate readings. The pulse sensor is intended only as an exercise aid in determining heart rate trends in general.**
17. **Never leave the treadmill unattended while it is running. Always remove the key, unplug the power cord and move the on/off switch to the off position when the treadmill is not in use. (See the drawing on page 5 for the location of the on/off switch.)**
18. **Do not attempt to raise, lower, or move the treadmill until it is properly assembled. (See ASSEMBLY on page 6, and HOW TO FOLD AND MOVE THE TREADMILL on page 19.) You must be able to safely lift 20 kg (45 lbs.) in order to raise, lower, or move the treadmill.**
19. **Do not change the incline of the treadmill by placing objects under the treadmill.**
20. **When folding or moving the treadmill, make sure that the storage latch is fully closed.**

Download from Www.Somanuals.com. All Manuals Search And Download.

21. When using iFIT.com CD's and videos, an electronic "chirping" sound will alert you when the speed and/or incline of the treadmill is about to change. Always listen for the "chirp" and be prepared for speed and/or incline changes. In some instances, the speed and/or incline may change before the personal trainer describes the change.

22. When using iFIT.com CD's and videos, you can manually override the speed and incline settings at any time by pressing the speed and incline buttons. However, when the next "chirp" is heard, the speed and/or incline will change to the next settings of the CD or video program.

23. Always remove iFIT.com CD's and videos from your CD player or VCR when you are not using them.

24. Inspect and tighten all parts of the treadmill regularly.

25. Never insert or drop any object into any opening.

26. **DANGER:** Always unplug the power cord immediately after use, before cleaning the treadmill, and before performing the maintenance and adjustment procedures described in this manual. Never remove the motor hood unless instructed to do so by an authorized service representative. Servicing other than the procedures in this manual should be performed by an authorized service representative only.

27. This treadmill is intended for in-home use only. Do not use this treadmill in any commercial, rental, or institutional setting.

⚠WARNING: Before beginning this or any exercise program, consult your physician. This is especially important for persons over the age of 35 or persons with pre-existing health problems. Read all instructions before using. ICON assumes no responsibility for personal injury or property damage sustained by or through the use of this product.

SAVE THESE INSTRUCTIONS

The decals shown below have been placed on your treadmill. If the decal is missing, or if it is not legible, please contact the establishment where this treadmill was purchased. (see ORDERING REPLACEMENT PARTS on the back cover of this manual). Apply the decal in the location shown.

Note: This decal is shown at 38% of actual size.

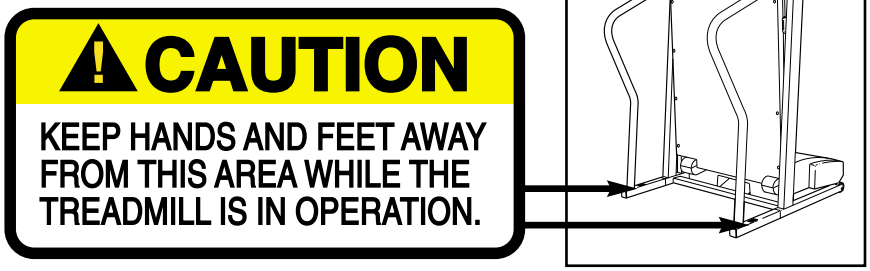

Download from Www.Somanuals.com. All Manuals Search And Download.

BEFORE YOU BEGIN

Thank you for selecting the revolutionary NordicTrack® CMX500 treadmill. The CMX500 treadmill combines advanced technology with innovative design to help you get the most from your exercise program in the convenience of your home. And when you're not exercising, the unique CMX500 can be folded up, requiring less than half the floor space of other treadmills.

For your benefit, read this manual carefully before using the treadmill. If you have additional questions, please contact the establishment where the treadmill was purchased. Please note the product model number and serial number before calling. The model number of the treadmill is NMTL06902. The serial number can be found on a decal attached to the treadmill (see the front cover of this manual for the location).

Before reading further, please familiarize yourself with the parts that are labeled in the drawing below.

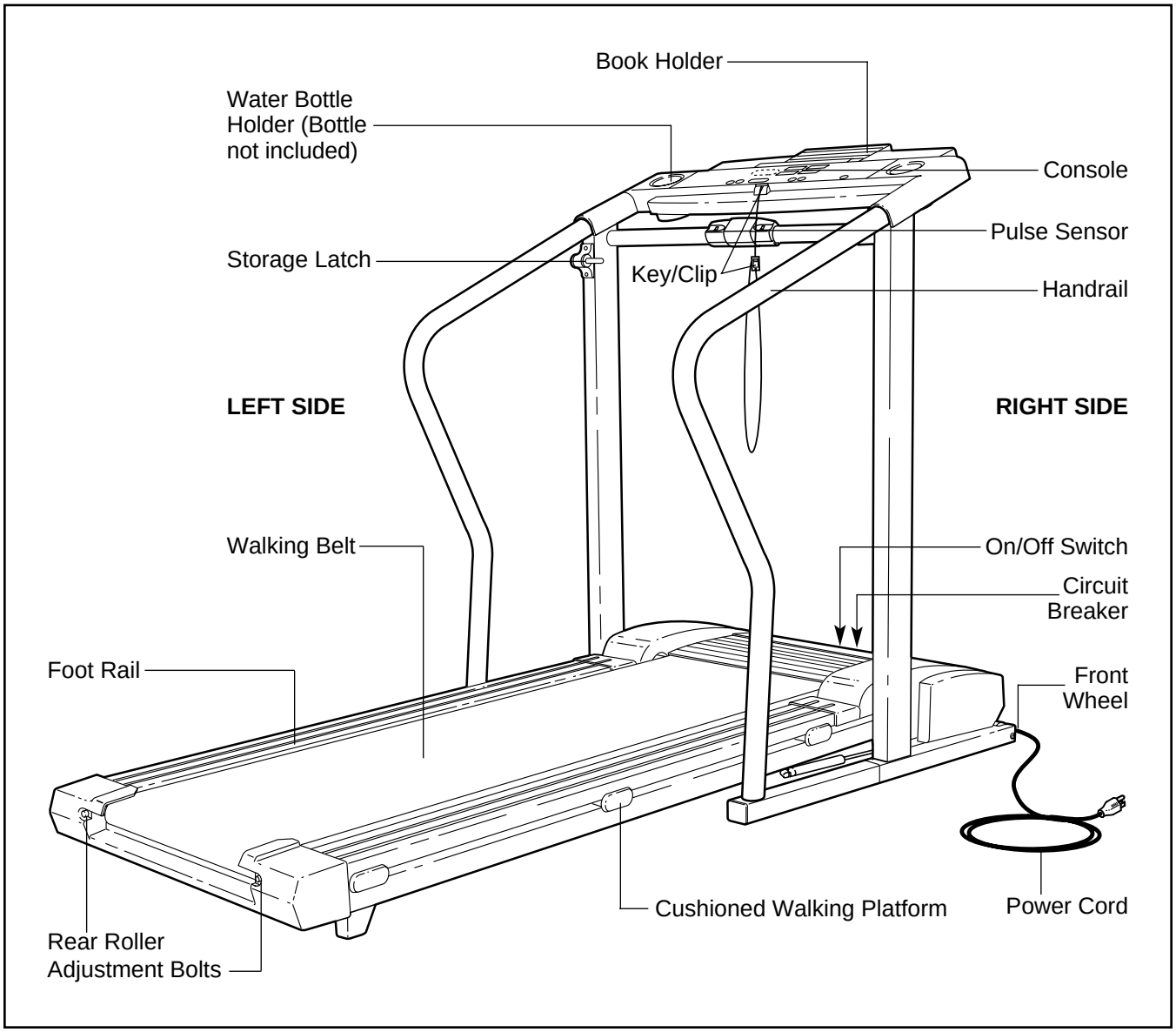

Download from Www.Somanuals.com. All Manuals Search And Download.

ASSEMBLY

Assembly requires two people. Set the treadmill in a cleared area and remove all packing materials. Do not dispose of the packing materials until assembly is completed. **Assembly requires the included allen wrench and your own phillips screwdriver and rubber mallet .**

Note: The underside of the treadmill walking belt is coated with high-performance lubricant. During shipping, a small amount of lubricant may be transferred to the top of the walking belt or the shipping carton. This is a normal condition and does not affect treadmill performance. If there is lubricant on top of the walking belt, simply wipe off the lubricant with a soft cloth and a mild, non-abrasive cleaner.

1. With the help of a second person, carefully raise the Uprights (82) until the treadmill is in the position shown.

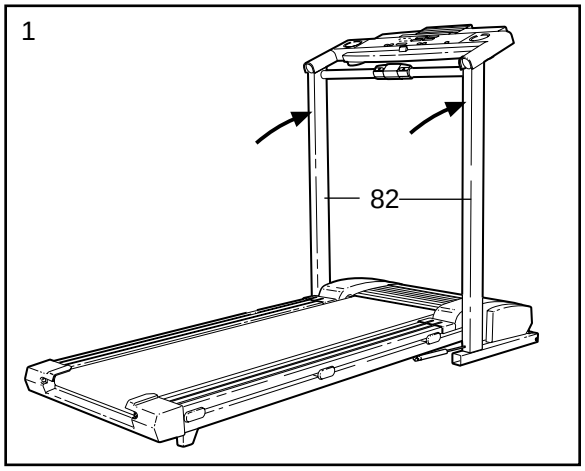

2. Remove the Lock Knob (110) from the Lock Pin (114).

   Make sure that the Lock Pin Collar (112) and the Spring (111) are on the Lock Pin as shown. Insert the Lock Pin into the Latch Bracket (77).

   Tighten the Lock Knob (110) onto the Lock Pin (114).

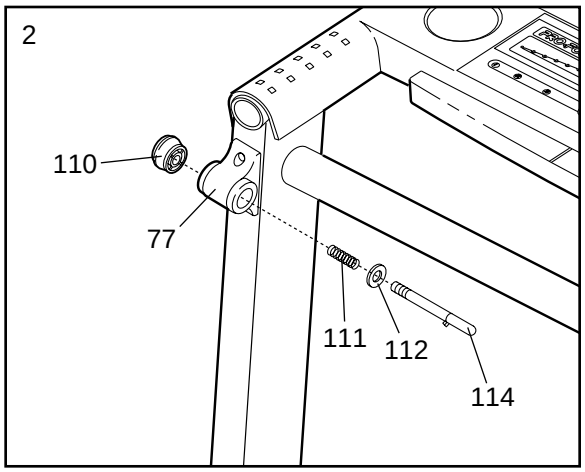

3. Refer to drawing 3a. Press a Handrail Insert (102) into the lower end of a Handrail (85). Hold an Extension Leg (103) against the lower end of the Handrail. Insert a Handrail Bolt (78) with a Handrail Washer (36) into the Extension Leg and thread the Handrail Bolt **three or four turns** into the Handrail. Notice the angle of the Handrail and insert the Handrail Bolt and Washer at the same angle (see drawing 3b).

   Attach a Handrail Insert (102) and an Extension Leg (103) to the other Handrail (85) in the same way.

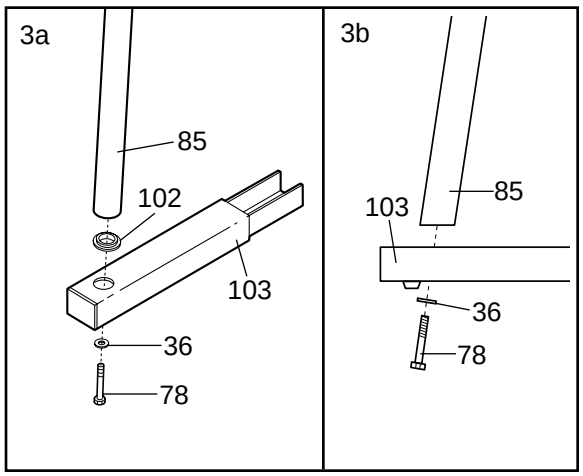

Download from Www.Somanuals.com. All Manuals Search And Download.

4. Slide the upper end of a Handrail (85) and then the Extension Leg (103) into the right Upright (82) as shown. (Note: It may be helpful to tip the Uprights [82] forward as you insert the Extension Leg. If necessary, tap the Extension Leg with a rubber mallet to fully insert it.)

   Slide the other Handrail (85) into the left Upright (82) as described above.

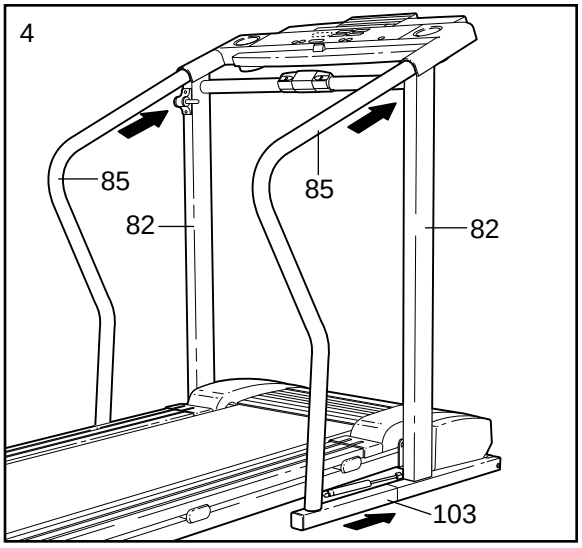

5. With the help of a second person, carefully tip the Uprights (82) down as shown. **Make sure that the Extension Legs (103) and Handrails (85) remain in the Uprights.**

   Next, attach each Extension Leg (103) with two Screws (101) and a Base Pad (116) as shown in drawing 5. Make sure that the Extension Legs are fully inserted into the Uprights (82) and push down on the Uprights as you tighten the Screws. Tighten the Handrail Bolts (78).

   Note: One replacement Base Pad (116) and Spacer (not shown) are included. If a Base Pad becomes worn and needs to be replaced, use the replacement Base Pad. If a Thick Base Pad (97) needs to be replaced, use the replacement Base Pad with the Spacer.

   With the help of a second person, carefully tip the Uprights (82) back to the upright position.

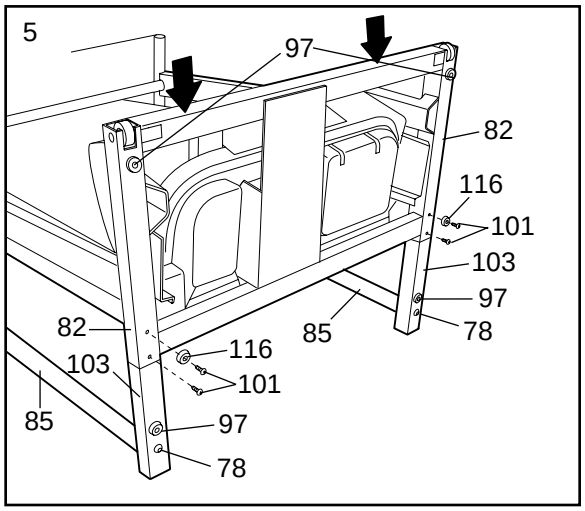

6. **Make sure that all parts are tightened before you use the treadmill.** Keep the included allen wrench in a secure place. The allen wrench is used to adjust the walking belt (see page 21). To protect the floor or carpet from damage, place a mat under the treadmill.

Download from Www.Somanuals.com. All Manuals Search And Download.

OPERATION AND ADJUSTMENT

THE PERFORMANT LUBE™ WALKING BELT

Your treadmill features a walking belt coated with PERFORMANT LUBE™, a high-performance lubricant. **IMPORTANT: Never apply silicone spray or other substances to the walking belt or the walking platform. They will deteriorate the walking belt and cause excessive wear.**

HOW TO PLUG IN THE POWER CORD

⚠ DANGER: Improper connection of the equipment-grounding conductor can result in an increased risk of electric shock. Check with a qualified electrician or serviceman if you are in doubt as to whether the product is properly grounded. Do not modify the plug provided with the product—if it will not fit the outlet, have a proper outlet installed by a qualified electrician.

Your treadmill, like any other type of sophisticated electronic equipment, can be seriously damaged by sudden voltage changes in your home's power. Voltage surges, spikes, and noise interference can result from weather conditions or from other appliances being turned on or off. **To decrease the possibility of your treadmill being damaged, always use a surge protector (not included) with your treadmill.**

Surge protectors are sold at most hardware stores and department stores. Use only a UL-listed surge protector, rated at 15 amps, with a 1 mm^2 (14-gauge) cord of five feet or less in length.

This product must be grounded. If it should malfunction or break down, grounding provides a path of least resistance for electric current to reduce the risk of electric shock. This product is equipped with a cord having an equipment-grounding conductor and a grounding plug. **Plug the power cord into a surge protector, and plug the surge protector into an appropriate outlet that is properly installed and grounded in accordance with all local codes and ordinances. Important: The treadmill is not compatible with GFCI-equipped outlets.**

This product is for use on a nominal 120-volt circuit, and has a grounding plug that looks like the plug illustrated in drawing 1 below. A temporary adapter that looks like the adapter illustrated in drawing 2 may be used to connect the surge protector to a 2-pole receptacle as shown in drawing 2 if a properly grounded outlet is not available.

The temporary adapter should be used only until a properly grounded outlet (drawing 1) can be installed by a qualified electrician.

The green-colored rigid ear, lug, or the like extending from the adapter must be connected to a permanent ground such as a properly grounded outlet box cover. Whenever the adapter is used it must be held in place by a metal screw. **Some 2-pole receptacle outlet box covers are not grounded. Contact a qualified electrician to determine if the outlet box cover is grounded before using an adapter.**

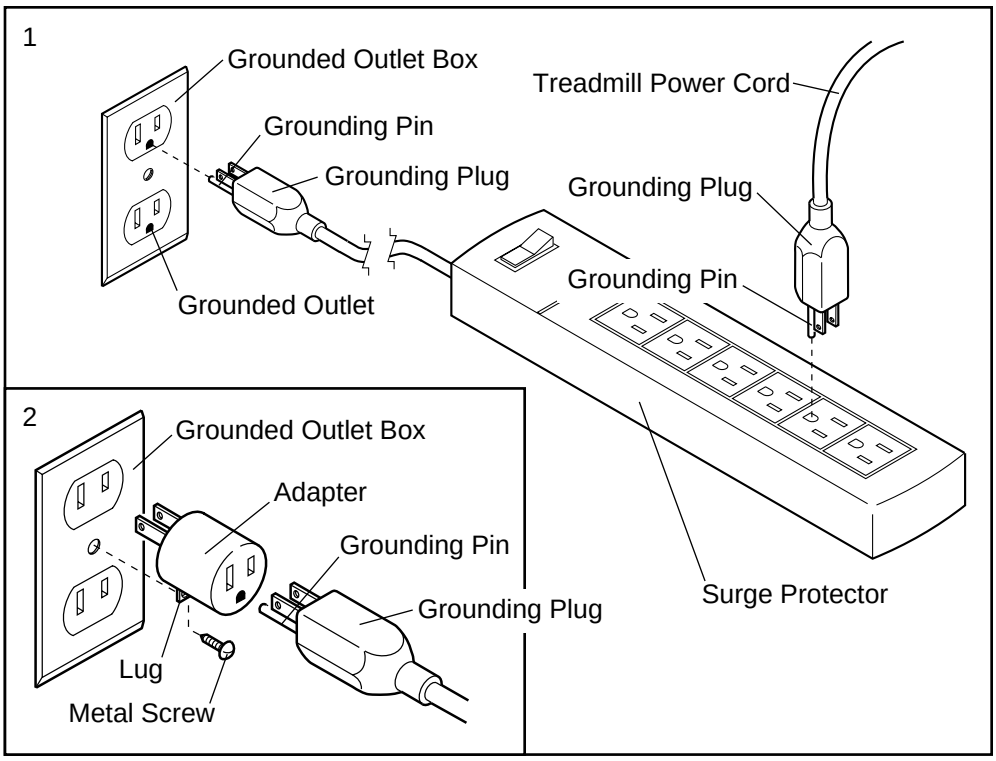

Download from Www.Somanuals.com. All Manuals Search And Download.

CONSOLE DIAGRAM

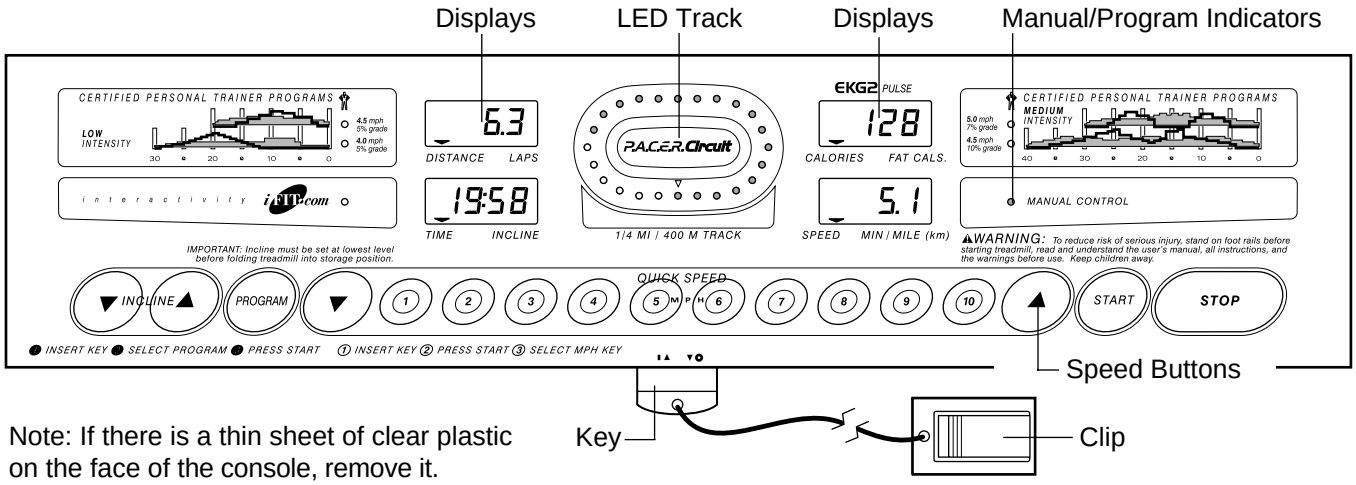

Note: If there is a thin sheet of clear plastic on the face of the console, remove it.

⚠ CAUTION: Before operating the console, read the following precautions.

- **Do not stand on the walking belt when turning on the power.**
- **Always wear the clip (see the drawing above) while operating the treadmill.**
- **Adjust the speed in small increments in order to avoid sudden jumps in speed.**
- **To reduce the possibility of electric shock, keep the console dry. Avoid spilling liquids on the console and place only a sealed water bottle in the water bottle holder.**

FEATURES OF THE CONSOLE

The treadmill console offers an impressive array of features to help you get the most from your exercise. When the console is in the manual mode, the speed and incline of the treadmill can be controlled with a touch of a button. As you exercise, the LED track and the four displays will provide continuous exercise feedback. You can even measure your heart rate using the built-in pulse sensor.

Four certified personal trainer programs are also offered. Each program automatically controls the speed and incline of the treadmill as it guides you through an effective workout.

The console also features advanced iFIT.com interactive technology. iFIT.com technology is like having a personal trainer right in your home. Using the included audio cable, you can connect the treadmill to your home stereo, portable stereo, or computer and play special iFIT.com CD programs (CD's are sold separately). iFIT.com CD programs automatically control the speed and incline of the treadmill as a personal trainer guides you through every step of your workout. High-energy music provides added motivation. Each CD features two different programs designed by certified personal trainers.

In addition, you can connect the treadmill to your VCR and TV and play iFIT.com video programs (videocassettes are sold separately). Video programs offer the same benefits as iFIT.com CD programs, but add the excitement of working out with a class and an instructor—the hottest new trend at health clubs.

With the treadmill connected to your computer, you can also go to our new internet site at www.iFIT.com and access even more programs. Choose from a selection of basic programs that interactively control the speed and incline of your treadmill to help you achieve your personal exercise goals. Or, use iFIT.com audio and video programs directly from our internet site. Visit www.iFIT.com for complete details.

To purchase iFIT.com CD's, iFIT.com videocassettes, contact the establishment where this product was purchased.

To use the manual mode of the console, follow the steps beginning on page 10. **To use a personal trainer program,** see page 12. **To use an iFIT.com CD or video program**, refer to page 15. **To use iFIT.com programs directly from our internet site**, see page 17.

Download from Www.Somanuals.com. All Manuals Search And Download.

HOW TO TURN ON THE POWER

1 Plug in the power cord (see HOW TO PLUG IN THE POWER CORD on page 8).

2 Locate the on/off switch on the front of the treadmill near the power cord. Make sure that the on/off switch is in the on position.

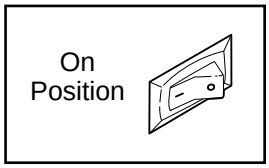

3 Stand on the foot rails of the treadmill. Find the clip attached to the key and slide the clip onto the waistband of your clothes. Next, insert the key into the console. After a moment, the displays and various indicators on the console will light. **Test the clip by carefully taking a few steps backward until the key is pulled from the console. If the key is not pulled from the console, adjust the position of the clip as needed.**

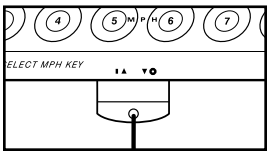

HOW TO USE THE MANUAL MODE

1 **Insert the key fully into the console.**

See HOW TO TURN ON THE POWER above.

2 **Select the manual mode.**

When the key is inserted, the manual mode will automatically be selected and the manual control indicator will light. If a program has been selected, press the PROGRAM button repeatedly to select the manual mode.

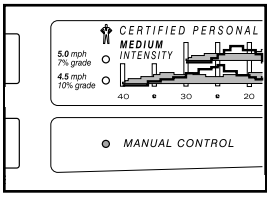

3 **Press the START button or the SPEED △ button to start the walking belt.**

A moment after the button is pressed, the walking belt will begin to move at 1 mph. Hold the handrails and carefully begin walking.

As you exercise, change the speed of the walking belt as desired by pressing the SPEED △ and ▽ buttons. Each time one of the buttons is pressed, the speed will change by 0.1 mph. If a button is held down, the speed will change in increments of 0.5 mph. To change the speed setting quickly, press the QUICK SPEED buttons.

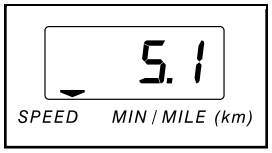

To stop the walking belt, press the STOP button. The TIME/INCLINE display will begin to flash. To restart the walking belt, press the START button or the SPEED △ button.

4 **Change the incline of the treadmill as desired.**

To change the incline of the treadmill, press the INCLINE buttons. Each time a button is pressed, the incline will change by 0.5%. The buttons can be held down to change the incline rapidly. Note: After the buttons are pressed, it will take a moment for the treadmill to reach the selected incline setting.

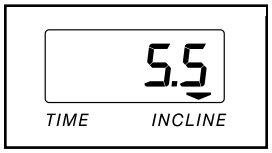

5 **Follow your progress with the LED track and the four displays.**

The LED Track—The LED track represents a distance of 1/4 mile (400 m). As you exercise, the indicators around the track will light one at a time until you have completed 1/4 mile. A new lap will then begin.

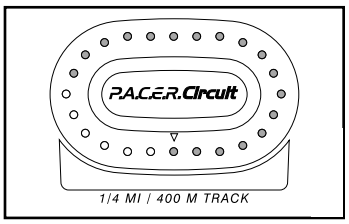

DISTANCE/LAPS display—This display shows the distance that you have walked or run and the number of laps you have completed. The display will alternate between one number and the other every seven seconds, as shown by the arrows in the display.

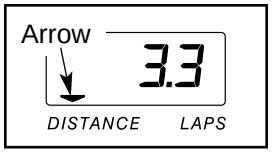

Download from Www.Somanuals.com. All Manuals Search And Download.

TIME/INCLINE display—When the manual mode or an iFIT.com program is selected, this display will show the elapsed time and the incline level of the treadmill. Every seven seconds, the display will change from one number to the other, as shown by the arrows in the display. When a personal trainer program is selected, the display will show the *time remaining* in the program.

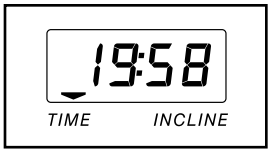

CALS./FAT CALS./PULSE display—This display shows the approximate numbers of *calories* and *fat calories* you have burned (see FAT BURNING on page 22). Every seven seconds, the display will change from one number to the other, as shown by the arrows in the display. The display will also show your heart rate when the pulse sensor is used (see step 6 on this page).

SPEED/MIN-MILE display—This display shows the speed of the walking belt and your current pace (pace is measured in *minutes per mile*). Every seven seconds, the display will change from one number to the other, as shown by the arrows in the display.

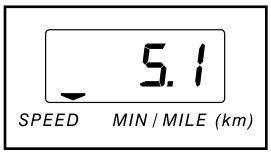

To change the unit of measurement, hold down the STOP button while inserting the key into the console. An “E,” for English miles, or an “M,” for metric kilometers, will appear in the SPEED/MIN-MILE display. Press the SPEED △ button to change the unit of measurement. When the desired unit of measurement is selected, remove the key and then reinsert it.

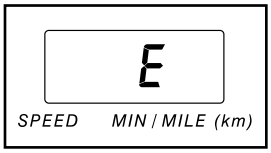

6 **Measure your heart rate, if desired.**

Note: When using the pulse sensor, make sure that your hands are clean. The pulse sensor should also be kept clean with a damp cloth and mild detergent.

To measure your heart rate, stand on the foot rails and place **both thumbs** on the pulse sensors as shown. **Do not press too hard, or the circulation in your thumbs will be restricted and your pulse will not be detected.** Next, wait until the heart-shaped indicator in the CALS./FAT CALS./PULSE display flashes **steadily**. After a few seconds, three dashes will appear in the display and then your heart rate will be shown. Hold your thumbs on the sensor for another 15 seconds for the most accurate reading.

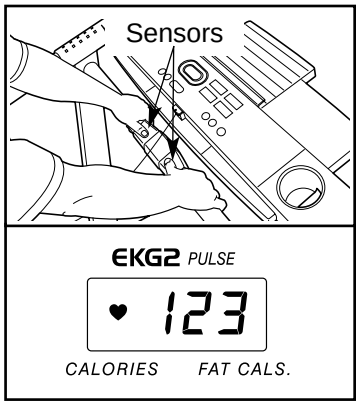

If the displayed heart rate appears to be too high or too low, or if your heart rate is not displayed, lift your thumbs off the sensors and allow the display to reset. Then, place your thumbs on the sensors as described above. Try the pulse sensor several times until you become familiar with it. Remember to stand still while measuring your heart rate.

7 **When you are finished exercising, remove the key.**

Step onto the foot rails, press the STOP button, and adjust the incline of the treadmill to the lowest level. **The incline must be at the lowest level when the treadmill is raised to the storage position or the treadmill will be damaged.** Next, remove the key from the console and put the key in a secure place. **Note: If the displays and various indicators on the console remain lit after the key is removed, the console is in the “demo” mode. Refer to page 18 and turn off the demo mode.**

When you are finished using the treadmill, move the on/off switch near the power cord to the off position.

Download from Www.Somanuals.com. All Manuals Search And Download.

HOW TO USE PERSONAL TRAINER PROGRAMS

1 Insert the key into the console.

See HOW TO TURN ON THE POWER on 10.

2 Select one of the personal trainer programs.

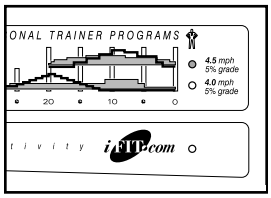

When the key is inserted, the manual mode will be selected. To select one of the personal trainer programs, press the PROGRAM button repeatedly until one of the four personal trainer program indicators lights.

The profiles on the console show how the speed and incline of the treadmill will change during the personal trainer programs. The numbers beside the profiles show the maximum speed and incline settings for the programs. For example, the upper left profile shows that the treadmill will reach a maximum speed of 4.5 mph and a maximum incline of 5% during the first program. The TIME/INCLINE display will show how long the selected program will last.

3 Press the START button or the SPEED △ button to start the program.

A moment after the button is pressed, the treadmill will automatically adjust to the first speed and incline settings for the program. Hold the handrails and begin walking.

Each program is divided into several time periods of different lengths. One speed setting and one incline setting are programmed for each period. When only three seconds remain in the first period of the program, a series of tones will sound and the treadmill will automatically adjust to the speed and incline settings for the second period.

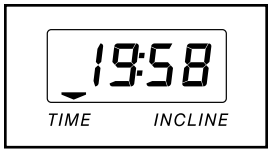

The program will continue in this way until the TIME/INCLINE display counts down to zero. The walking belt will then slow to a stop.

If the speed or incline setting for the current period is too high or too low, you can manually override the setting by pressing the SPEED or INCLINE buttons on the console. **However, when the next period begins, the treadmill will adjust to the next speed and incline settings for the program.**

To stop the program, press the STOP button. The TIME/INCLINE display will begin to flash. To restart the program, press the START button or the SPEED △ button. To end the program, press the STOP button, remove the key, and then reinsert the key.

4 Follow your progress with the LED track and the four displays.

Refer to step 5 on page 10.

5 Measure your heart rate, if desired.

See step 6 on page 11.

6 When the program is completed, remove the key from the console.

When the program has ended, **make sure that the treadmill is at the lowest incline level.** Next, remove the key from the console and put it in a secure place. **Note: If the displays and indicators on the console remain lit after the key is removed, the console is in the "demo" mode. Refer to page 18 and turn off the demo mode.**

When you are finished using the treadmill, move the on/off switch near the power cord to the off position.

Download from Www.Somanuals.com. All Manuals Search And Download.

HOW TO CONNECT THE TREADMILL TO YOUR CD PLAYER, VCR, OR COMPUTER

To use iFIT.com CD's, the treadmill must be connected to your portable CD player, portable stereo, home stereo, or computer with CD player. See pages 13 and 14 for connecting instructions. **To use iFIT.com videocassettes**, the treadmill must be connected to your VCR. See page 15 for connecting instructions. **To use iFIT.com programs directly from our internet site**, the treadmill must be connected to your home computer. See page 14 for connecting instructions.

HOW TO CONNECT YOUR PORTABLE CD PLAYER

Note: If your CD player has separate LINE OUT and PHONES jacks, see instruction A below. If your CD player has only one jack, see instruction B.

A. Plug one end of the audio cable into the jack on the front of the treadmill near the power cord. Plug the other end of the cable into the LINE OUT jack on your CD player. Plug your headphones into the PHONES jack.

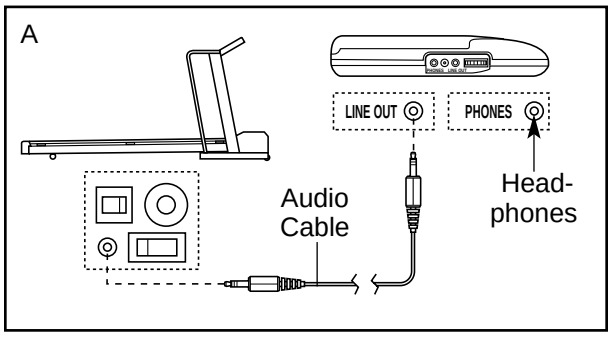

B. Plug one end of the audio cable into the jack on the front of the treadmill near the power cord. Plug the other end of the cable into a 3.5mm Y-adapter (available at electronics stores). Plug the Y-adapter into the PHONES jack on your CD player. Plug your headphones into the other side of the Y-adapter.

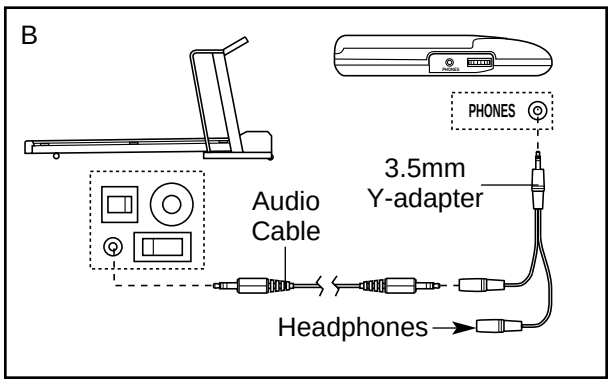

HOW TO CONNECT YOUR PORTABLE STEREO

Note: If your stereo has an RCA-type AUDIO OUT jack, see instruction A below. If your stereo has a 3.5mm LINE OUT jack, see instruction B. If your stereo has only a PHONES jack, see instruction C.

A. Plug one end of the audio cable into the jack on the front of the treadmill near the power cord. Plug the other end of the cable into the included adapter. Plug the adapter into an AUDIO OUT jack on your stereo.

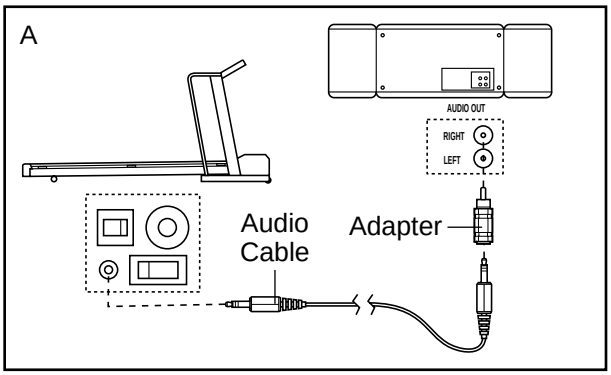

B. Plug one end of the audio cable into the jack on the front of the treadmill near the power cord. Plug the other end of the cable into the LINE OUT jack on your stereo.

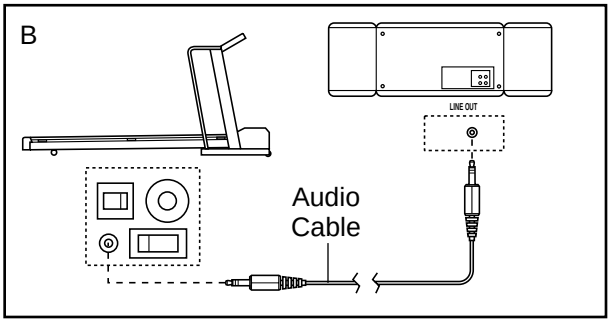

C. Plug one end of the audio cable into the jack on the front of the treadmill near the power cord. Plug the other end of the cable into a 3.5mm Y-adapter (available at electronics stores). Plug the Y-adapter into the PHONES jack on your stereo. Plug your headphones into the other side of the Y-adapter.

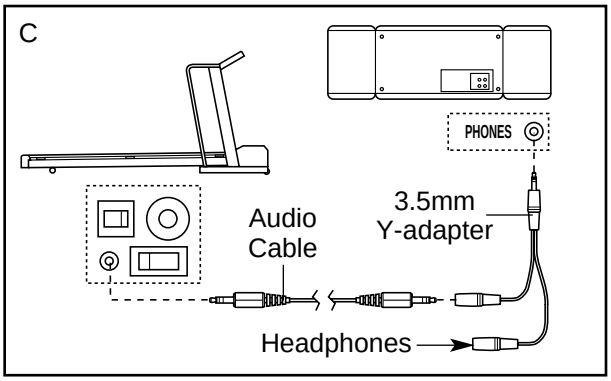

Download from Www.Somanuals.com. All Manuals Search And Download.

HOW TO CONNECT YOUR HOME STEREO

Note: If your stereo has an unused LINE OUT jack, see instruction A below. If the LINE OUT jack is being used, see instruction B.

A. Plug one end of the audio cable into the jack on the front of the treadmill near the power cord. Plug the other end of the cable into the included adapter. Plug the adapter into the LINE OUT jack on your stereo.

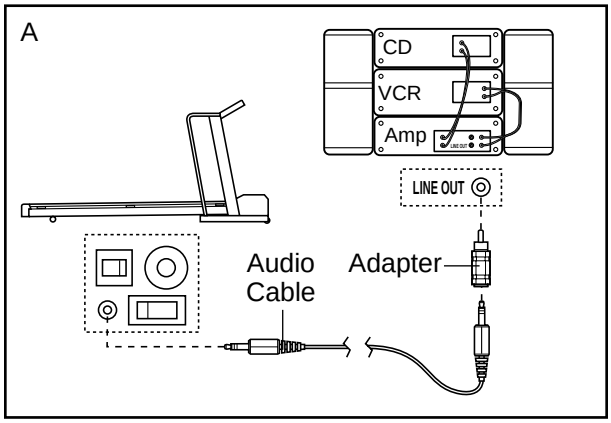

B. Plug one end of the audio cable into the jack on the front of the treadmill near the power cord. Plug the other end of the cable into the included adapter. Plug the adapter into an RCA adapter (available at electronics stores). Next, remove the wire that is currently plugged into the LINE OUT jack on your stereo and plug the wire into the unused side of the RCA adapter. Plug the RCA adapter into the LINE OUT jack on your stereo.

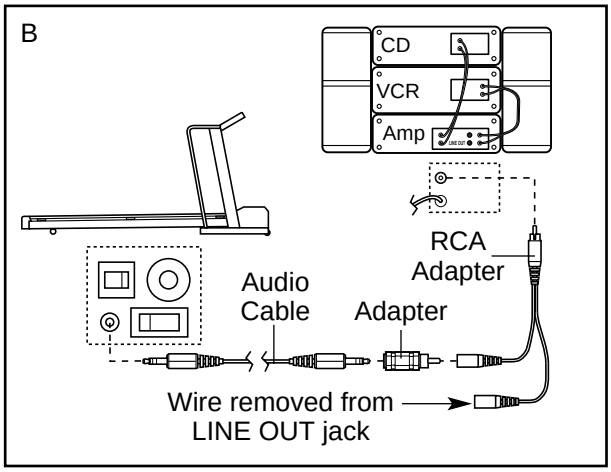

HOW TO CONNECT YOUR COMPUTER

Note: If your computer has a 3.5mm LINE OUT jack, see instruction A. If your computer has only a PHONES jack, see instruction B.

A. Plug one end of the audio cable into the jack on the front of the treadmill near the power cord. Plug the other end of the cable into the LINE OUT jack on your computer.

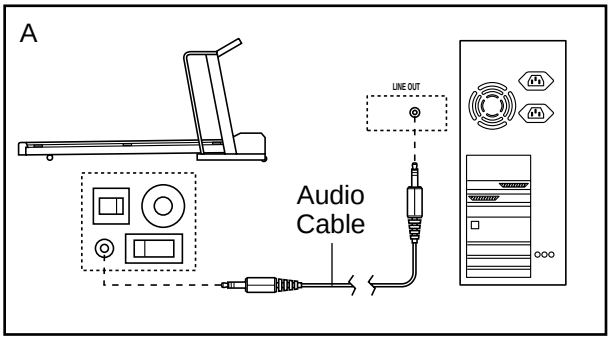

B. Plug one end of the audio cable into the jack on the front of the treadmill near the power cord. Plug the other end of the cable into a 3.5mm Y-adapter (available at electronics stores). Plug the Y-adapter into the PHONES jack on your computer. Plug your headphones or speakers into the other side of the Y-adapter.

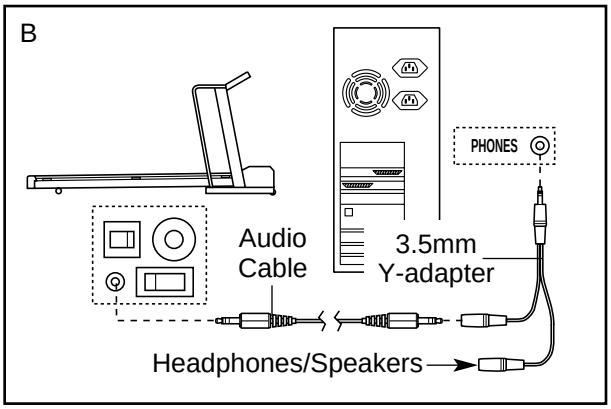

Download from Www.Somanuals.com. All Manuals Search And Download.

HOW TO CONNECT YOUR VCR

Note: If your VCR has an unused AUDIO OUT jack, see instruction A below. If the AUDIO OUT jack is being used, see instruction B. If you have a TV with a built-in VCR, see instruction B. If your VCR is connected to your home stereo, see HOW TO CONNECT YOUR HOME STEREO on page 14.

A. Plug one end of the audio cable into the jack on the front of the treadmill near the power cord. Plug the other end of the cable into the included adapter. Plug the adapter into the AUDIO OUT jack on your VCR.

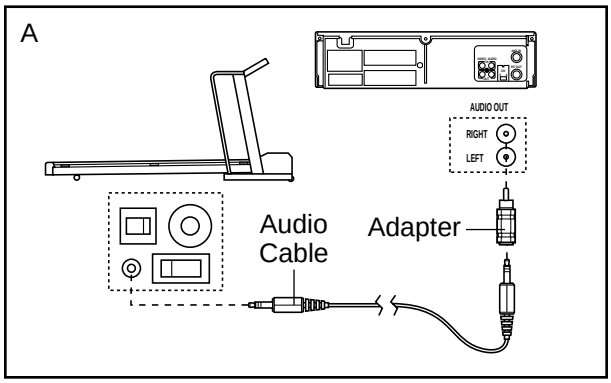

B. Plug one end of the audio cable into the jack on the front of the treadmill near the power cord. Plug the other end of the cable into the included adapter. Plug the adapter into an RCA adapter (available at electronics stores). Next, remove the wire that is currently plugged into the AUDIO OUT jack on your VCR and plug the wire into the unused side of the RCA adapter. Plug the RCA adapter into the AUDIO OUT jack on your VCR.

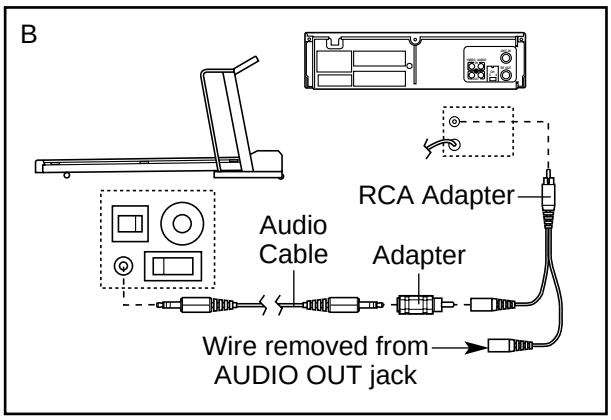

HOW TO USE IFIT.COM CD AND VIDEO PROGRAMS

To use iFIT.com CD's or videocassettes, the treadmill must be connected to your portable CD player, portable stereo, home stereo, computer with CD player, or VCR. See HOW TO CONNECT THE TREADMILL TO YOUR CD PLAYER, VCR, OR COMPUTER on page 13. **Note: To purchase iFIT.com CD's or iFIT.com videocassettes, contact the establishment where this product was purchased.**

Follow the steps below to use an iFIT.com CD or video program.

1 Insert the key fully into the console.

See HOW TO TURN ON THE POWER on page 10.

2 Select the iFIT.com mode.

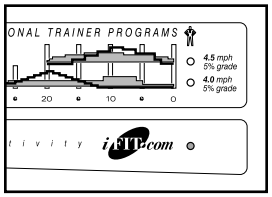

When the key is inserted, the manual mode will automatically be selected. To use an iFIT.com CD or video program, press the PROGRAM button repeatedly until the iFIT.com indicator lights.

3 Insert the iFIT.com CD or videocassette.

If you are using an iFIT.com CD, insert the CD into your CD player. If you are using an iFIT.com videocassette, insert the videocassette into your VCR.

4 Press the PLAY button on your CD player or VCR.

A moment after the button is pressed, your personal trainer will begin guiding you through your workout. Simply follow your personal trainer's instructions. Note: If the TIME/INCLINE display is flashing, press the START button or the SPEED △ button on the console. The treadmill will not respond to a CD or video program when the TIME/INCLINE display is flashing.

During the CD or video program, an electronic "chirping" sound will alert you when the speed and/or incline of the treadmill is about to change. **CAUTION: Always listen for the "chirp" and be prepared for speed and/or incline changes. In some instances, the speed and/or incline may change before the personal trainer describes the change.**

Download from Www.Somanuals.com. All Manuals Search And Download.

If the speed or incline settings are too high or too low, you can manually override the settings at any time by pressing the SPEED or INCLINE buttons on the console. However, **when the next "chirp" is heard, the speed and/or incline will change to the next settings of the CD or video program.**

To stop the walking belt at any time, press the STOP button on the console. The TIME/INCLINE display will begin to flash. To restart the program, press the START button or the SPEED △ button. After a moment, the walking belt will begin to move at 1.0 mph. **When the next "chirp" is heard, the speed and incline will change to the next settings of the CD or video program**. The program can also be stopped by pressing the STOP button on your CD player or VCR.

When the CD or video program is completed, the walking belt will stop and the TIME/INCLINE display will begin to flash. Note: To use another CD or video program, press the STOP button or remove the key and go to step 1 on page 15.

Note: If the speed or incline of the treadmill does not change when a "chirp" is heard:

- **Make sure that the iFIT.com indicator is lit and that the TIME/INCLINE display is not flashing. If the TIME/INCLINE display is flashing, press the START button or the SPEED △ button on the console**
- **Adjust the volume of your CD player or VCR. If the volume is too high or too low, the console may not detect the program signals**
- **Make sure that the audio cable is properly connected, that it is fully plugged in, and that it is not wrapped around a power cord**
- **If you are using your portable CD player and the CD skips, set the CD player on the floor or another flat surface instead of on the console.**

5 **Follow your progress with the LED track and the four displays.**

See step 5 on page 10.

6 **Measure your heart rate, if desired.**

See step 6 on page 11.

7 **When the iFIT.com CD or video program is finished, remove the key.**

See step 6 on page 12.

CAUTION: Always remove iFIT.com CD's and videocassettes from your CD player or VCR when you are finished using them.

Download from Www.Somanuals.com. All Manuals Search And Download.

HOW TO USE PROGRAMS DIRECTLY FROM OUR INTERNET SITE

Our new internet site at www.iFIT.com allows you to access a selection of programs that interactively control your treadmill to help you achieve your specific exercise goals. In addition, you can play iFIT.com audio and video programs directly from the internet.

To use programs from our internet site, the treadmill must be connected to your home computer. See HOW TO CONNECT YOUR COMPUTER on page 14. In addition, you must have an internet connection and an internet service provider. A list of specific system requirements will be found on our internet site.

Follow the steps below to use a program from our internet site.

1 Insert the key into the console.

See HOW TO TURN ON THE POWER on page 10.

2 Select the iFIT.com mode.

When the key is inserted, the manual mode will be selected and the manual indicator will light. To use a program from our internet site, press the PROGRAM button repeatedly until the iFIT.com indicator lights.

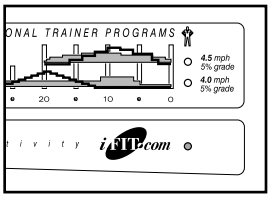

3 Go to your computer and start an internet connection.

4 Start your web browser, if necessary, and go to our internet site at www.iFIT.com.

5 Follow the desired links on our internet site to select a program.

Read and follow the on-line instructions for using a program.

6 Follow the on-line instructions to start the program.

When you start the program, an on-screen countdown will begin.

7 Return to the treadmill and stand on the foot rails. Find the clip attached to the key and slide the clip onto the waistband of your clothing.

When the on-screen countdown ends, the program will begin and the walking belt will begin to move. Hold the handrails, step onto the walking belt, and begin walking.

During the program, an electronic “chirping” sound will alert you when the speed and/or incline of the treadmill is about to change. **CAUTION: Always listen for the “chirp” and be prepared for speed and/or incline changes.**

If the speed or incline settings are too high or too low, you can manually override the settings at any time by pressing the SPEED or INCLINE buttons on the console. **However, when the next “chirp” is heard, the speed and/or incline will change to the next settings of the program.**

To stop the walking belt at any time, press the STOP button on the console. The TIME/INCLINE display will begin to flash. To restart the program, press the START button or the SPEED △ button. After a moment, the walking belt will begin to move at 1.0 mph. **When the next “chirp” is heard, the speed and incline will change to the next settings of the program**.

When the program is completed, the walking belt will stop and the TIME/INCLINE display will begin to flash. Note: To use another program, press the STOP button and go to step 5.

Note: If the speed or incline of the treadmill does not change when a “chirp” is heard, make sure that the iFIT.com indicator is lit and that the TIME/INCLINE display is not flashing. In addition, make sure that the audio cable is properly connected, that it is fully plugged in, and that it is not wrapped around a power cord.

8 Follow your progress with the LED track and the four displays.

See step 5 on page 10.

9 Measure your heart rate, if desired.

See step 6 on page 11.

10 When the program is finished, remove the key.

See step 6 on page 12.

Download from Www.Somanuals.com. All Manuals Search And Download.

INFORMATION MODE/DEMO MODE

The console features an information mode that keeps track of the total number of hours that the treadmill has been operated and the total number of miles that the walking belt has moved. The information mode also allows you to switch the console from miles per hour to kilometers per hour. In addition, the information mode allows you to turn on and turn off the demo mode.

To select the information mode, hold down the STOP button while inserting the key into the console. When the information mode is selected, the following information will be shown:

The DISTANCE/LAPS display will show the total number of miles that the walking belt has moved.

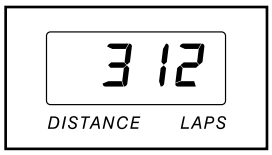

The TIME/INCLINE display will show the total number of hours the treadmill has been used.

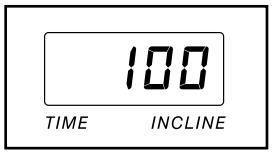

An “E,” for English miles, or an “M,” for metric kilometers, will appear in the SPEED/MIN-MILE display. Press the SPEED △ button to change the unit of measurement.

IMPORTANT: The CALS./ FAT CALS./PULSE display should be blank. If a “d” appears in the display, the console is in the “demo” mode. This mode is intended to be used only when a treadmill is displayed in a store. When the console is in the demo mode, the power cord can be plugged in, the key can be removed from the console, and the displays and indicators on the console will automatically light in a preset sequence, although the buttons on the console will not operate. **If a “d” appears in the CALS./FAT CALS./PULSE display when the information mode is selected, press the SPEED ▽ button so the display is blank.**

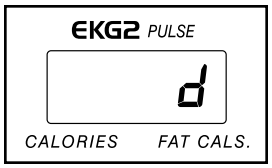

To exit the information mode, remove the key from the console.

Download from Www.Somanuals.com. All Manuals Search And Download.

HOW TO FOLD AND MOVE THE TREADMILL

HOW TO FOLD THE TREADMILL FOR STORAGE

Before folding the treadmill, adjust the incline to the lowest position. If this is not done, the treadmill may be permanently damaged. Next, unplug the power cord. CAUTION: You must be able to safely lift 20 kg (45 lbs.) in order to raise, lower, or move the treadmill.

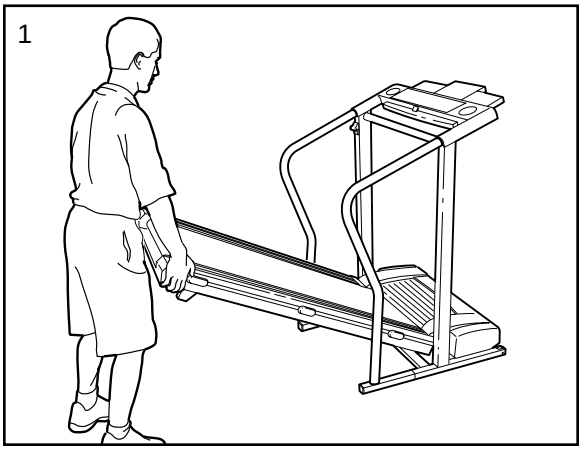

1. Hold the treadmill with your hands in the locations shown at the right. **CAUTION: To decrease the possibility of injury, bend your legs and keep your back straight. As you raise the treadmill, make sure to lift with your legs rather than your back.** Raise the treadmill about halfway to the vertical position.

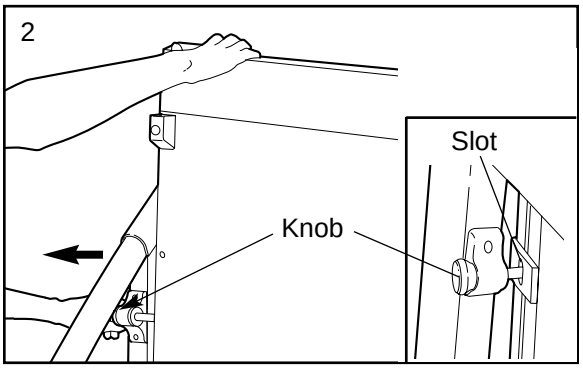

2. Move your right hand to the position shown and hold the treadmill firmly. Hold the lock knob with your left hand and pull it to the left. Raise the treadmill until the lock knob is aligned with the slot in the catch. Note: You may need to push the handrail to the side slightly. Slowly release the lock knob. **Make sure that the pin on the lock knob is inserted into the slot.**

   To protect the floor or carpet from damage, place a mat under the treadmill. Keep the treadmill out of direct sunlight. Do not leave the treadmill in the storage position in temperatures above 85° Fahrenheit.

HOW TO MOVE THE TREADMILL

Before moving the treadmill, convert the treadmill to the storage position as described above. **Make sure that the pin on the lock knob is inserted into the slot in the catch.**

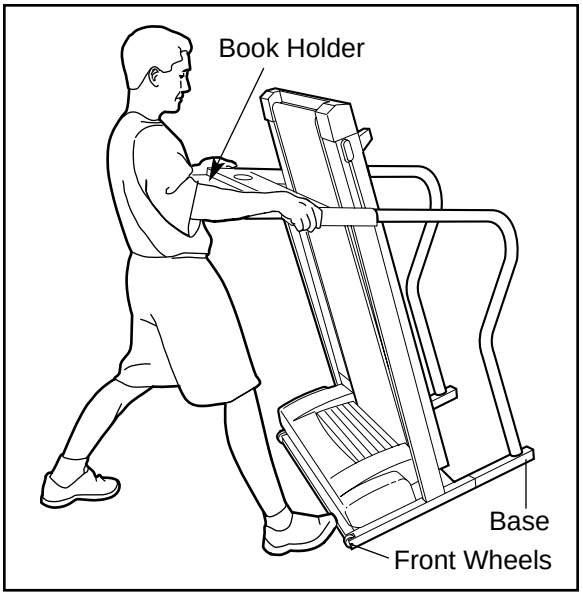

1. Hold the handrails as shown and place one foot against a wheel. **Do not hold or push on the book holder or the book holder may be damaged.**

2. Tilt the treadmill back until it rolls freely on the front wheels. Carefully move the treadmill to the desired location. **Never move the treadmill without tipping it back. To reduce the risk of injury, use extreme caution while moving the treadmill. Do not attempt to move the treadmill over an uneven surface.**

3. Place one foot on the base, and carefully lower the treadmill until it is resting in the storage position.

HOW TO LOWER THE TREADMILL FOR USE

1. Refer to drawing 2 above. Hold the upper end of the treadmill with your right hand as shown. Using your left hand, pull the lock knob to the left and hold it. Pivot the treadmill down until the frame is past the pin on the lock knob. Note: You may need to push the handrail to the side slightly.

2. Refer to drawing 1 above. Hold the treadmill firmly with both hands, and lower the treadmill to the floor. **CAUTION: To decrease the possibility of injury, bend your legs and keep your back straight.**

Download from Www.Somanuals.com. All Manuals Search And Download.

TROUBLE-SHOOTING

Most treadmill problems can be solved by following the steps below. Find the symptom that applies, and follow the steps listed. If further assistance is needed, please contact the establishment where this treadmill was purchased.

PROBLEM: The power does not turn on

SOLUTION: a. Make sure that the power cord is plugged into a surge protector, and that the surge protector is plugged into a properly grounded outlet. (See HOW TO PLUG IN THE POWER CORD on page 8.) Use only a UL-listed surge protector, rated at 15 amps, with a 1 mm^2 (14-gauge) cord of 1.5 m (5 ft.) or less in length. Important: The treadmill is not compatible with GFCI-equipped outlets.

b. After the power cord has been plugged in, make sure that the key is fully inserted into the console.

c. Check the circuit breaker located on the treadmill near the power cord. If the switch protrudes as shown, the circuit breaker has tripped. To reset the circuit breaker, wait for five minutes and then press the switch back in.

d. Check the on/off switch located on the treadmill near the power cord. The switch must be in the on position.

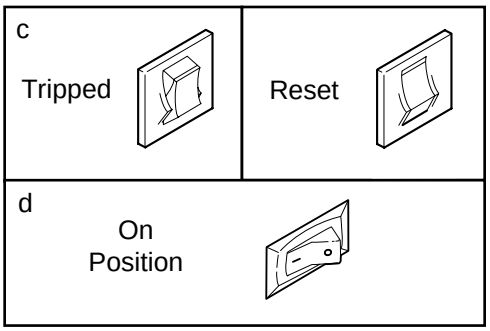

PROBLEM: The power turns off during use

SOLUTION: a. Check the circuit breaker located on the treadmill frame near the power cord (see c. above). If the circuit breaker has tripped, wait for five minutes and then press the switch back in.

b. Make sure that the power cord is plugged in.

c. Remove the key from the console. Reinsert the key fully into the console.

d. Make sure that the on/off switch is in the on position.

PROBLEM: The displays of the console do not function properly

SOLUTION: a. Remove the key from the console and **unplug the power cord.** Remove the screws from the hood and carefully remove the hood.

Locate the Reed Switch (21) and the Magnet (43) on the left side of the Pulley (42). Turn the Pulley until the Magnet is aligned with the Reed Switch. **Make sure that the gap between the Magnet and the Reed Switch is about 3 mm (1/8 in.).** If necessary, loosen the Reed Switch Screw (76) and move the Reed Switch slightly. Retighten the Screw. Re-attach the hood, and run the treadmill for a few minutes to check for a correct speed reading.

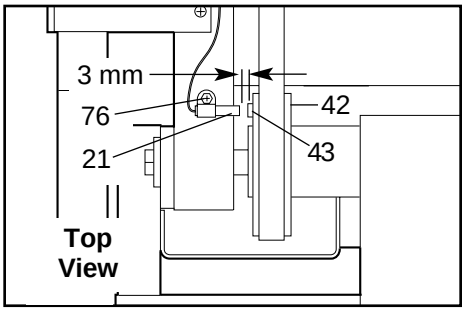

PROBLEM: The pulse display on the console does not function properly

SOLUTION: a. Wash your hands before to using the pulse sensor. In addition, keep the pulse sensor clean using a damp cloth and a small amount of mild detergent.

Download from Www.Somanuals.com. All Manuals Search And Download.

PROBLEM: The walking belt slows when walked on

SOLUTION: a. Use only a UL-listed surge protector, rated at 15 amps, with a 1 mm^2 (14-gauge) cord of five feet or less in length.

b. If the walking belt is overtightened, treadmill performance may decrease and the walking belt may become damaged. Remove the key and **UNPLUG THE POWER CORD**. Using the allen wrench, turn both rear roller adjustment bolts counterclockwise, 1/4 of a turn. When the walking belt is properly tightened, you should be able to lift each side of the walking belt 5 to 7 cm (3 to 4 in.) off the walking platform. Be careful to keep the walking belt centered. Plug in the power cord, insert the key and run the treadmill for a few minutes. Repeat until the walking belt is properly tightened.

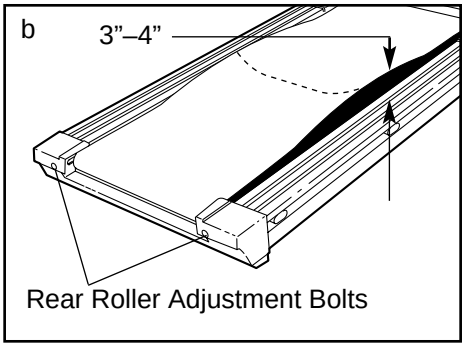

PROBLEM: The walking belt is off-center or slips when walked on

SOLUTION: a. **If the walking belt has shifted to the left,** first remove the key and **UNPLUG THE POWER CORD**. Using the allen wrench, turn the left rear roller adjustment bolt clockwise, and the right bolt counterclockwise, 1/4 of a turn each. Be careful not to overtighten the walking belt. Plug in the power cord, insert the key and run the treadmill for a few minutes. Repeat until the walking belt is centered.

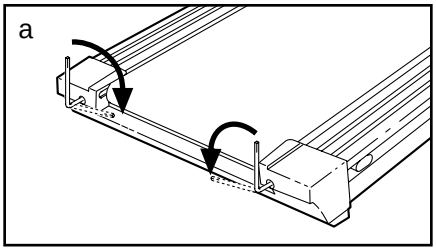

b. **If the walking belt has shifted to the right,** first remove the key and **UNPLUG THE POWER CORD**. Using the allen wrench, turn the left rear roller adjustment bolt counterclockwise, and the right bolt clockwise, 1/4 of a turn each. Be careful not to overtighten the walking belt. Plug in the power cord, insert the key and run the treadmill for a few minutes. Repeat until the walking belt is centered.

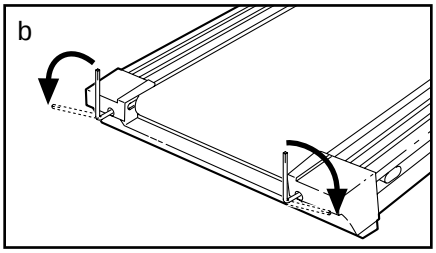

a. If the walking belt slips when walked on, first remove the key and **UNPLUG THE POWER CORD**. Using the allen wrench, turn both rear roller adjustment bolts clockwise, 1/4 of a turn. When the walking belt is correctly tightened, you should be able to lift each side of the walking belt 5 to 7 cm (3 to 4 in.) off the walking platform. Be careful to keep the walking belt centered. Plug in the power cord, insert the key and carefully walk on the treadmill for a few minutes. Repeat until the walking belt is properly tightened.

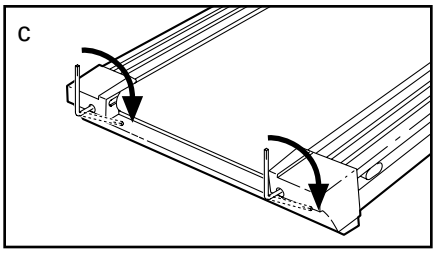

PROBLEM: The incline of the treadmill does not change correctly or does not change when iFIT.com CD’s and videos are played

SOLUTION: a. With the key inserted into the console, press one of the INCLINE buttons. **While the incline is changing, remove the key.** After a few seconds, re-insert the key. The treadmill will automatically rise to the maximum incline level and then return to the minimum level. This will recalibrate the incline.

Download from Www.Somanuals.com. All Manuals Search And Download.

CONDITIONING GUIDELINES

⚠WARNING: Before beginning this or any exercise program, consult your physician. This is especially important for individuals over the age of 35 or individuals with pre-existing health problems.

The pulse sensor is not a medical device. Various factors, including your movement, may affect the accuracy of heart rate readings. The sensor is intended only as an exercise aid in determining heart rate trends in general.

The following guidelines will help you to plan your exercise program. Remember—these are general guidelines only. For more detailed exercise information, obtain a reputable book or consult your physician.

EXERCISE INTENSITY

Whether your goal is to burn fat or to strengthen your cardiovascular system, the key to achieving the desired results is to exercise with the proper intensity. The proper intensity level can be found by using your heart rate as a guide. The chart below shows recommended heart rates for fat burning and aerobic exercise.

HEART RATE TRAINING ZONES

AEROBIC	165	155	145	140	130	125	115
MAX FAT BURN	145	138	130	125	118	110	103
FAT BURN	125	120	115	110	105	95	90
Age	20	30	40	50	60	70	80

To find the proper heart rate for you, first find your age near the bottom of the chart (ages are rounded off to the nearest ten years). Next, find the three numbers above your age. The three numbers define your "training zone." The lower two numbers are recommended heart rates for fat burning; the higher number is the recommended heart rate for aerobic exercise.

To measure your heart rate during exercise, use the pulse sensor. If your heart rate is too high or too low, adjust the speed and incline of the treadmill.

Fat Burning

To burn fat effectively, you must exercise at a relatively low intensity level for a sustained period of time. During the first few minutes of exercise, your body uses easily accessible *carbohydrate calories* for energy. Only after the first few minutes does your body begin to use stored *fat calories* for energy. If your goal is to burn fat, adjust the speed and incline of the treadmill until your heart rate is near the lowest number in your training zone.

For maximum fat burning, adjust the speed and incline of the treadmill until your heart rate is near the middle number in your training zone.

Aerobic Exercise

If your goal is to strengthen your cardiovascular system, your exercise must be "aerobic." Aerobic exercise is activity that requires large amounts of oxygen for prolonged periods of time. This increases the demand on the heart to pump blood to the muscles, and on the lungs to oxygenate the blood. For aerobic exercise, adjust the speed and incline of the treadmill until your heart rate is near the highest number in your training zone.

WORKOUT GUIDELINES

Each workout should include the following three parts:

A Warm-up—Start each workout with 5 to 10 minutes of stretching and light exercise. A proper warm-up increases your body temperature, heart rate and circulation in preparation for exercise.

Training Zone Exercise—After warming up, increase the intensity of your exercise until your pulse is in your training zone for 20 to 60 minutes. (During the first few weeks of your exercise program, do not keep your pulse in your training zone for longer than 20 minutes.) Breathe regularly and deeply as you exercise—never hold your breath.

A Cool-down—Finish each workout with 5 to 10 minutes of stretching to cool down. This will increase the flexibility of your muscles and will help prevent post-exercise problems.

EXERCISE FREQUENCY

To maintain or improve your condition, complete three workouts each week, with at least one day of rest between workouts. After a few months, you may complete up to five workouts each week if desired.

The key to success is to make exercise a regular and enjoyable part of your everyday life.

Download from Www.Somanuals.com. All Manuals Search And Download.

PART LIST—Model No. NMTL06902

R0302A

To locate the parts listed below, refer to the EXPLODED DRAWING attached in the center of this manual.

Key No.	Qty.	Description
1	1	Motor Belt
2	1	Pulley/Flywheel/Fan
3	4	Motor Nut
4*	1	Motor/Pulley/ Flywheel/ Fan
5	2	Incline Motor Bolt
6	2	Incline Motor Spacer
7	1	Incline Motor
8	1	Stop Bracket
9	1	Small Nut
10	2	Star Washer
11	1	Optic Switch
12	1	Frame
13	1	Small Bolt
14	1	Incline Optic Disk
15	8	Incline Motor Nut
16	14	Small Screw
17	4	Plastic Stand-Off
18	2	Hood Bracket (short)
19	1	Hood Bracket (long)
20	2	Warning Decal
21	1	Reed Switch
22	1	Reed Switch Clip
23	1	Motor/Controller Wire
24	1	Controller
25	1	Electronics Bracket
26	1	Circuit Breaker
27	1	Power Cord
28	1	Power Cord Grommet
29	1	On/Off Switch
30	1	Inlet Bracket
31	1	Incline Leg
32	2	Frame Pivot Bolt
33	2	Frame Pivot Spacer
34	1	Upright Wire Harness
35	1	Front Roller Adj. Bolt
36	5	Handrail Washer/ Roller Adj. Washer
37	2	Motor Tension Nut/ Front Roller Nut
38	4	Motor Bolt
39	4	Cap Screw
40	1	Left/Right Foot Rail Cap
41	2	Foot Rail
42	1	Front Roller/Pulley
43	1	Magnet
44	4	Platform Screw
45	4	Isolator
46	4	Isolator Screw
47	15	Belly Pan Fastener
48	1	Shield
49	2	Belt Guide
50	1	Console Cover
51	1	Front Belly Pan
52	1	Power Supply
53	4	Cable Tie Clamp
54	4	Cable Tie
55	1	Walking Belt
56	1	25” Wire Harness
57	1	Rear Roller
58	2	Rear Isolator
59	2	Rear Foot
60	2	Rear Foot Screw
61	1	Ground Wire
62	7	Ground Wire Screw
63	1	Belly Pan
64	1	Rear Endcap
65	2	Rear Roller Adj. Bolt
66	1	Motor
67	1	Latch Decal
68	4	Rear Platform Screw
69	2	Catch Screw
70	1	Latch Catch
71	1	Walking Platform
72	5	8” cable Tie
73	1	Jack
74	1	Motor Tension Bolt
75	1	Left Foot Rail Insert
76	12	Reed Switch Screw/ Belly Pan Screw
77	1	Storage Latch
78	2	Handrail Bolt
79	4	Long Screw
80	1	iFIT Wire
81	4	Motor Star Washer
82	1	Upright
83	2	Incline Leg Pivot Bolt
84	2	Incline Leg Pivot Washer
85	2	Handrail
86	2	Wheel Bolt
87	1	Console Base
88	1	Console
89	11	3/4” Screw
90	1	Key/Clip
91	1	Incline Motor Plate
92	1	Audio Wire Nut
93	1	Book Holder
94	1	Motor Hood
95	2	Front Wheel
96	1	Incline Motor Shield
97	4	Thick Base Pad
98	1	12” Audio Wire
99	1	Upright Grommet
100	1	Allen Wrench
101	17	Screw
102	2	Handrail Insert
103	2	Extension Leg
104	2	Extension Leg Cap
105	1	Shock
106	1	Choke
107	2	Pulse Bar Bolt
108	2	Pulse Bar Washer
109	1	Pulse Bar
110	1	Lock Knob
111	1	Spring
112	1	Lock Pin Collar
113	1	Pin Clip
114	1	Lock Pin
115	1	Belly Pan Spacer
116	2	Base Pad
117	1	Trim Edge
118	1	Motor Tension Bushing
119	1	Incline Sensor Wire
120	2	Static Decal
121*	1	Latch Assembly
122	1	Rear Foot Spacer
#	1	8” White Wire, 2F
#	1	4” White Wire, M/F
#	1	8” Blue Wire, 2F
#	1	4” Blue Wire, 2F
#	1	4” Black Wire, 2F
#	1	4” Green Wire, F/Ring
#	1	8” Green Wire, 2 Ring
#	1	4” Red Wire, M/F
#	1	User's Manual

* Includes all parts shown in the box

\# These parts are not illustrated

Download from Www.Somanuals.com. All Manuals Search And Download.

ORDERING REPLACEMENT PARTS

To order replacement parts, please contact the establishment where this product was purchased. Please be prepared to give the following information:

- the MODEL NUMBER OF THE PRODUCT (NMTL06902)
- the NAME OF THE PRODUCT (NordicTrack® CMX500 treadmill)
- the SERIAL NUMBER OF THE PRODUCT (see the front cover of this manual)
- the KEY NUMBER AND DESCRIPTION OF THE PART(S) (see the EXPLODED DRAWING attached in the center of this manual and the PART LIST on page 23).

NordicTrack is a registered trademark of ICON Health & Fitness, Inc.

Part No. 176522 R0302A

Printed in USA © 2002 ICON Health & Fitness, Inc.

Download from Www.Somanuals.com. All Manuals Search And Download.

EXPLODED DRAWING—Model No. NMTL06902

R0302A

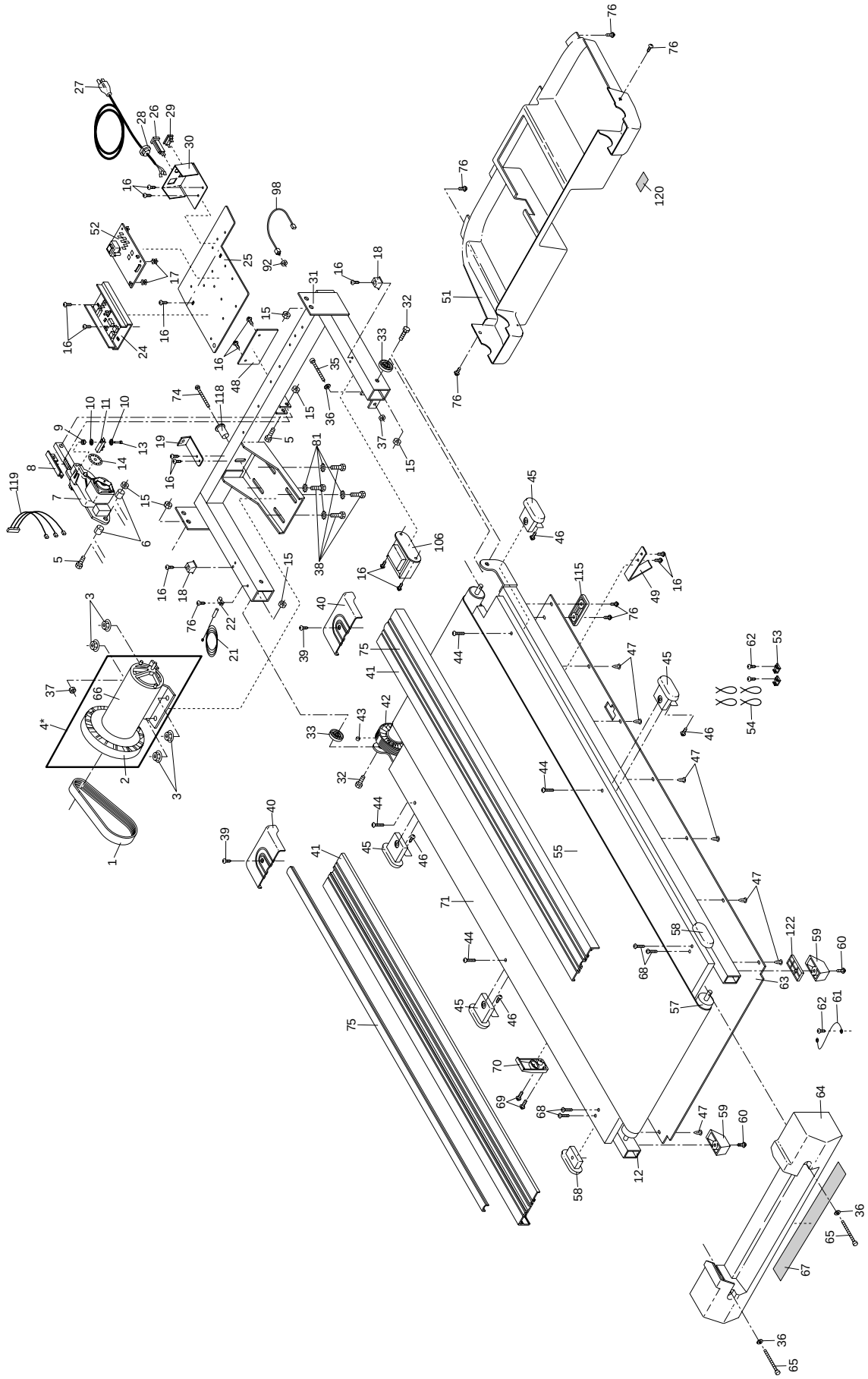

To identify the parts shown on this exploded drawing, refer to the PART LIST on page 23 of the USER'S MANUAL.

Download from Www.Somanuals.com. All Manuals Search And Download.

EXPLODED DRAWING—Model No. NMTL06902

R0302A

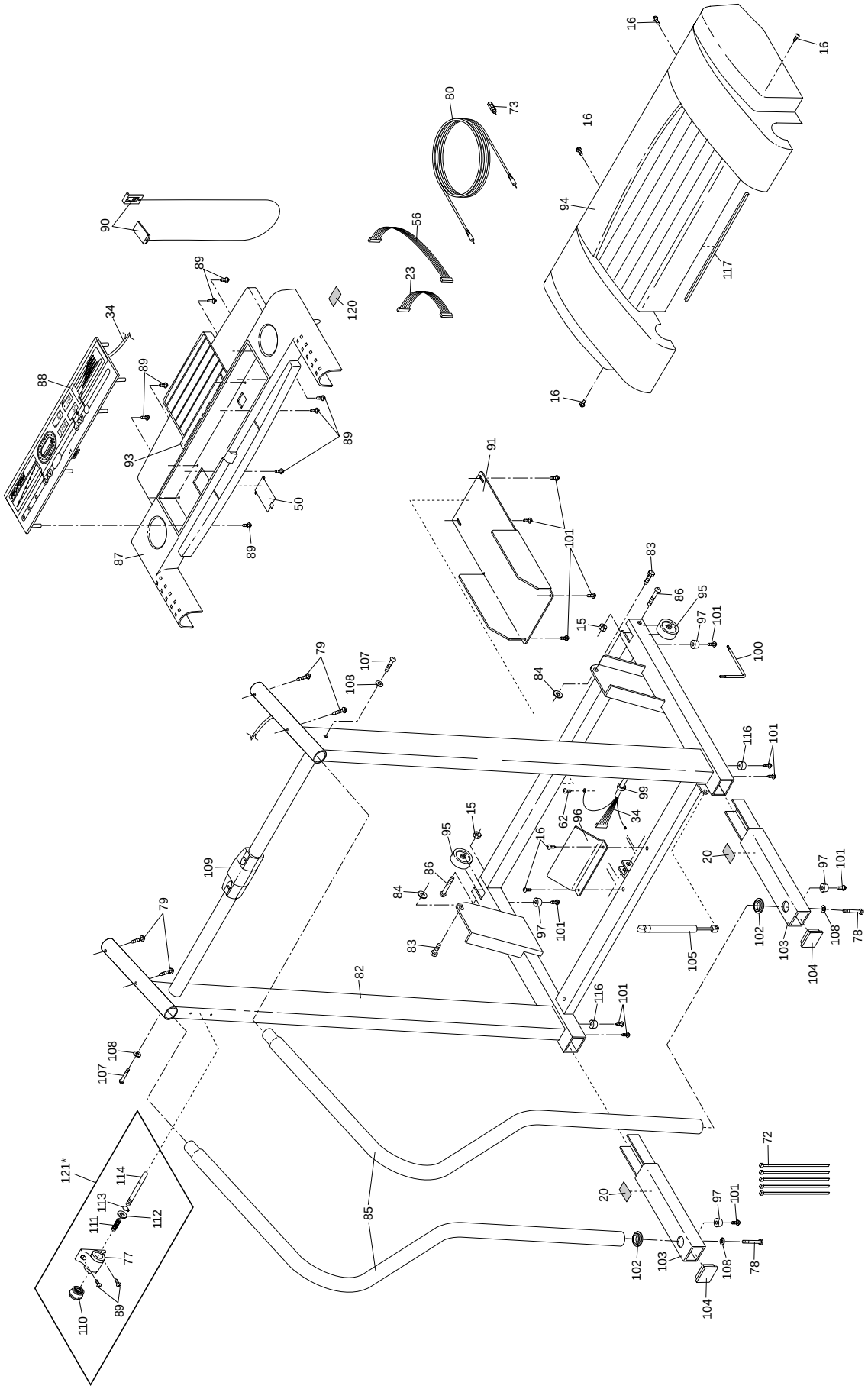

Download from Www.Somanuals.com. All Manuals Search And Download.

Free Manuals Download Website

http://myh66.com

http://usermanuals.us

http://www.somanuals.com

http://www.4manuals.cc

http://www.manual-lib.com

http://www.404manual.com

http://www.luxmanual.com

http://aubethermostatmanual.com

Golf course search by state

http://golfingnear.com

Email search by domain

http://emailbydomain.com

Auto manuals search

http://auto.somanuals.com

TV manuals search

http://tv.somanuals.com