NuTone®

SPECIFICATION SHEET

NS1 SERIES RANGE HOOD

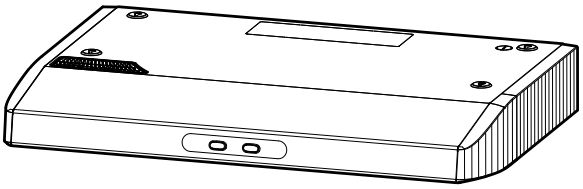

A sleek, contemporary styled range hood with high-performance capability.

FEATURES

- Clean, sleek appearance
- Durable, baked-on polyester finish paint or brushed finish stainless steel
- Over 50% quieter than the average range hood
- Large, full filter design - dishwasher-safe for easy cleaning
- Dual halogen lights provide focused lighting for unmatched cooktop visibility as well as a soft, night-time level (lamps not included)
- Centrifugal blower provides increased performance and quieter operation.
- Flush-mounted controls
- Versatile design allows for 3¼" x 10", 7" round, or non-ducted discharges without re-positioning blower
- Adjustable duct connectors - accommodate off-center ductwork
- Available in 30" and 36" widths in White, Black, and Stainless Steel
- Tri-lingual carton graphics and installation manual (English/Spanish/French Canadian)

SPECIFICATIONS

Volts	120
HZ	60
Amps	2.1
CFM (Normal)	100
Max. CFM (High)	350
Sones (Normal)	0.9
Sones (High)	8.0
Controls	2-sp rocker
Halogen Flood Light	GU10 MR16†
Charcoal Filter	BPDF‡

† 2 bulbs req. (not included).

‡ Purchase separately for non-ducted installation.

C UL US LISTED

2100 HVI CERTIFIED

HVI-2100 CERTIFIED RATINGS comply with new testing technologies and procedures prescribed by the Home Ventilating Institute, for off-the-shelf products, as they are available to consumers. Product performance is rated at 0.1 in. static pressure, based on tests conducted in AMCA's state-of-the-art test laboratory. Sones are a measure of humanly-perceived loudness, based on laboratory measurements.

TYPICAL SPECIFICATION

Range hood shall be NuTone NS1 Series.

Unit will have clean, contoured appearance with no sharp edges. Finish to be baked-on polyester paint (matte finish stainless steel). It must have a fully-enclosed bottom and dishwasher-safe, full filters.

Hood to be convertible between 3¼" x 10" and 7" round ducted (using two washable aluminum filters) as well as non-ducted (using two charcoal filters - must be purchased separately). Duct connectors must be adjustable to accommodate off-center ductwork.

Range hood to have a centrifugal blower and 50-watt (max.) halogen flood lights. Blower and lights shall be operated using a specially-designed, adjustable control with 2-speed rocker.

Air delivery shall be no less than 100 cfm and sound level no greater than 0.9 Sones (350 cfm and 8.0 Sones on High Speed). Air and sound ratings to be certified by HVI. Unit shall be U.L. and cU.L. listed.

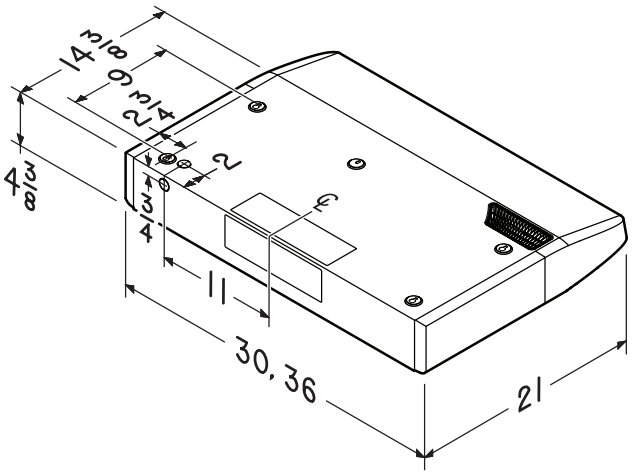

NuTone, Inc. Cincinnati, Ohio www.nutone.com 888-336-3948

REFERENCE	QTY.	REMARKS	Project
			Location
			Architect
			Engineer
			Contractor
			Submitted by Date

70E 99044078A

Download from Www.Somanuals.com. All Manuals Search And Download.

Free Manuals Download Website

http://myh66.com

http://usermanuals.us

http://www.somanuals.com

http://www.4manuals.cc

http://www.manual-lib.com

http://www.404manual.com

http://www.luxmanual.com

http://aubethermostatmanual.com

Golf course search by state

http://golfingnear.com

Email search by domain

http://emailbydomain.com

Auto manuals search

http://auto.somanuals.com

TV manuals search

http://tv.somanuals.com