Omnitron Systems Technology, Inc.

iConverter 10FL/T User Manual

***iConverter* 10FL/T** Dual Fiber Modules					
Fiber Type	**Distance**	**Connector Type**			
		ST	**SC**	**MT-RJ**	**LC**
MM	2 km	8300-0	8302-0	-	-
MM	5 km	8300-1	-	8304-1	-
SM	30 km	8301-1	8303-1	8305-1	8307-1
SM	60 km	8301-2	8303-2	-	8307-2
SM	120 km	-	8303-3	-	8307-3

***iConverter* 10FL/T** Single-Fiber Modules			
Fiber / Connector Type	**Distance**	**Tx: 1310 nm, Rx: 1550 nm**	**Tx: 1550 nm, Rx: 1310 nm**
SM / SC	20 km	8310-1	8311-1
SM / SC	40 km	8310-2	8311-2

For wide temperature (-40 to 60º C) modules, add a "W" to the end of the model number. Consult factory for other configurations and extended temperature(-40 to +75º C) modules.
When using single-fiber (SF) media converter models, the Tx wavelength on one end has to match the Rx wavelength on the other.

ABOUT THIS MANUAL:

This document supports revision "xx/20" of the ***iConverter*** 10FL/T. Please refer to the serial number label on the ROM chip of the 10FL/T for the revision number of your product. This revision incorporates the following improvements to the 10FL/T.

1. Link Propagate is the default link mode.

OVERVIEW:

The ***iConverter*** 10FL/T converters support the IEEE 802.3 Ethernet standard and convert 10BASE-T unshielded twisted pair (UTP) to 10BASE-FL fiber optic cabling. Models are available for multimode (MM) and single-mode (SM) dual fiber and single-mode single-fiber.

The 10FL/T supports Half-Duplex and Full-Duplex modes and features a crossover UTP switch for easy attachment to hubs, switches and workstations.

The 10FL/T can be used in an unmanaged or managed fashion. When unmanaged, the 10FL/T can be installed in a chassis without a Network Management Module (NMM). To be managed, a NMM module must be installed in the same chassis.

LINK MODES:

In order to accommodate different user needs, the 10FL/T supports two different linking modes.

In Link Propagate (LP), sometimes referred to as "Link Loss Carry Forward", a converter port transmits a Link signal only when receiving a Link at its other port. For example, the UTP transmits a Link only when receiving a Link at the fiber port [Fig 1(b)]. Link propagate is the factory default setting.

In Remote Fault Detection (RFD), the UTP port transmits a Link signal only when receiving a Link at the fiber port. The fiber port transmits a Link only when receiving Link signals both at the fiber port and the UTP port. As a result, fiber faults (no "Link" received at the fiber) are looped-back and can be reported to the network's core [Fig 1(c)].

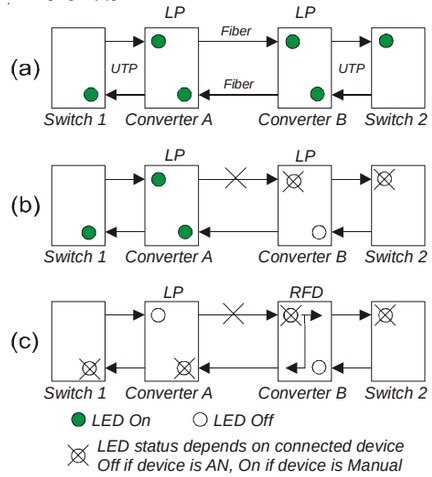

Fig. 1 Link Modes

FRONT PANEL DIP-SWITCH SETTINGS:

Normal = Norm R/Flt Det = Remote Fault Detect

Fig. 2 DIP-Switches

REMOTE FAULT DETECT "R/FLT DET" DIP-SWITCH:

When the Remote Fault Detect DIP-Switch is in the "R/Flt Det" position, the Remote Fault Detect mode is enabled. When in the "Norm" (factory setting) position, Remote Fault Detect is disabled and Link Propagate is enabled.

Note that connecting two converters when both are set to RFD mode is illegal and will cause a "deadly embrace" lockup.

RJ45 Crossover "X / =" Switch (Not Shown):

When connecting the UTP port to a hub or switch, set switch to Straight-Through "=" (factory setting). When connecting to a workstation, set it to Crossover "X".

LED INDICATORS:

LED	Color	Description
Pwr:	Yellow	On-Power on
Lk/Act (F/O):	Green	On-Link; Blink-Activity
Lk/Act (UTP):	Green	On-Link; Blink-Activity

MOUNTING AND CABLE ATTACHMENT:

The ***iConverter*** modules are hot-swappable and can be installed into any ***iConverter*** chassis.

1. Using the chassis' module guides for alignment, insert the module into the selected slot and secure using the front panel fastener screw.

2. Attach the UTP port to a 10BASE-T Ethernet device using a Category 5 cable. If the attached device features 10/100 or 10/100/1000 Auto-Negotiation, disable this feature and manually set the UTP port speed of the connected device to 10Mbps.
3. Using a multimode or single-mode dual-fiber cable as required per the converter type, attach the fiber port to a 10BASE-FL mating Ethernet device. The transmit (Tx) must attach to the receive side of the mating device and the receive (Rx) must attach to the transmit side.
4. Single-fiber (SF) converters must be used in matched pairs. The transmit (Tx) and receive (Rx) wavelengths of one converter must match the receive (Rx) and transmit (Tx) wavelengths of the mating converter. For example, an 8310-1 must be connected to an 8311-1.

10FL/T SPECIFICATIONS:

Model Type	**10FL/T**
Protocols	10BASE-FL, 10 BASE-T
UTP Connectors	RJ-45
Fiber Connectors	SC, ST, LC, MT-RJ, Single-Fiber SC
Controls	LS/LP, RFD
LED Displays	Power, F/O Link, UTP Link
Dimensions	W:0.85" x D:4.5" x H:2.8"
Weight	8 oz.
Compliance	UL, CE, FCC Class A, NEBS Level 3
Power Requirement	0.5A @ 3.3VDC (typical)
Temperature	Standard: 0 to 50º C Wide: -40 to 60º C Storage: -40 to 80º C
Humidity	5 to 95% (non-condensing)
Altitude	-100m to 4000m
MTBF (hrs)	830,000

Notes:

Warning

The operating description in this Instruction Manual is for use by qualified personnel only. To avoid electrical shock, do not perform any servicing of this unit other than that contained in the operating instructions, unless you are qualified and certified to do so by Omnitron Systems Technology, Inc.

Warranty

This product is warranted to the original purchaser against defects in material and workmanship for a period of 2 YEARS from the date of shipment. A LIFETIME limited warranty may be obtained by the original purchaser by REGISTERING this product with Omnitron within 90 days from the date of shipment. To register, complete and mail or fax the enclosed Registration Card to the indicated address. You may also register your product on the internet at www.omnitron-systems.com/Register. During the warranty period, Omnitron will, at its option, repair or replace a product which is proven to be defective.

For warranty service, the product must be sent to an Omnitron designated facility, at Buyer's expense. Omnitron will pay the shipping charge to return the product to Buyer's designated US address (within the 48 contiguous states and the District of Columbia) using Omnitron's standard shipping method.

Limitation of Warranty

The foregoing warranty shall not apply to defects resulting from improper or inadequate use and/or maintenance of the equipment by Buyer, Buyer-supplied equipment, Buyer-supplied interfacing, unauthorized modifications or tampering with equipment (including repairs of equipment by personnel not specifically authorized and certified by Omnitron), or misuse, or operating outside the environmental specification of the product (including but not limited to voltage, ambient temperature, radiation, unusual dust, etc.), or improper site preparation or maintenance.
No other warranty is expressed or implied. Omnitron specifically disclaims the implied warranties of merchantability and fitness for any particular purpose.

Exclusive Remedies

The remedies provided herein are the Buyer's sole and exclusive remedies. Omnitron shall not be liable for any direct, indirect, special, incidental, or consequential damages, whether based on contract, tort, or any legal theory.

TECHNICAL SUPPORT:

For help with this product, contact our Technical Support:

Phone: (949) 250-6510
Fax: (949) 250-6514
Address: Omnitron Systems Technology, Inc.
140 Technology Dr., #500
Irvine, CA 92618 USA
E-mail: support@omnitron-systems.com
URL: www.omnitron-systems.com

040-08300-001J 9/07

Download from Www.Somanuals.com. All Manuals Search And Download.

Free Manuals Download Website

http://myh66.com

http://usermanuals.us

http://www.somanuals.com

http://www.4manuals.cc

http://www.manual-lib.com

http://www.404manual.com

http://www.luxmanual.com

http://aubethermostatmanual.com

Golf course search by state

http://golfingnear.com

Email search by domain

http://emailbydomain.com

Auto manuals search

http://auto.somanuals.com

TV manuals search

http://tv.somanuals.com