Panasonic

Operating Instructions

Digital Cordless Answering System

Model No. **KX-TG2721AL**
KX-TG2722AL

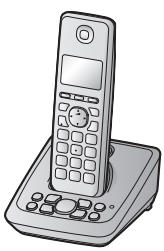

DECT 6.0

Model shown is KX-TG2721.

Before initial use, see "Getting Started" on page 9.

Thank you for purchasing a Panasonic product.

Please read these operating instructions before using the unit and save them for future reference.

Please access our online customer survey:
http://panasonic.net/pcc/tel/q

Download from Www.Somanuals.com. All Manuals Search And Download.

Table of Contents

Introduction
Model composition 3
Accessory information 3

Important Information
For your safety 5
Important safety instructions 6
For best performance 6
Other information 7
Specifications 7

Getting Started
Setting up 9
Note when setting up 10
Controls 11
Display 12
Turning the power on/off 12
Initial settings 12
One touch eco mode 13

Making/Answering Calls
Making calls 14
Answering calls 14
Useful features during a call 15

Phonebook
Handset phonebook 16
Copying phonebook entries 16

Programming
Programmable settings 18
Special programming 20

Caller ID Service
Using Caller ID service 22
Caller list 22

Answering System
Answering system 24
Turning the answering system on/off 24
Greeting message 24
Listening to messages using the base unit 25
Listening to messages using the handset 26
Remote operation 26
Answering system settings 28

Voice Mail Service
Voice mail service 30

Intercom/Locator
Intercom 31
Handset locator 31
Transferring calls, conference calls 31

Useful Information
Character entry 32
Error messages 34
Troubleshooting 34
Wall mounting 39

Index
Index.....40

TG2721_22AL(en)_0730_ver001.pdf 2 2012/07/30 16:53:04

Download from Www.Somanuals.com. All Manuals Search And Download.

Model composition

Series	Model No.	Base unit	Handset	
		Part No.	Part No.	Quantity
KX-TG2721 series	KX-TG2721	KX-TG2721	KX-TGA277	1
	KX-TG2722	KX-TG2721	KX-TGA277	2

- Intercom calls and the phonebook copy feature are only available for KX-TG2722.
- The suffix (AL) in the following model numbers will be omitted in these instructions: KX-TG2721AL/KX-TG2722AL

Accessory information

Supplied accessories

No.	Accessory item/Part number	Quantity	
		KX-TG2721	KX-TG2722
①	AC adaptor/PNLV226AL	1	2
②	Telephone line cord*1	1	1
③	Rechargeable batteries*2	2	4
④	Handset cover*3	1	2
⑤	Charger	–	1

*1 The telephone line cord comes connected with the telephone plug.
*2 See page 4 for replacement battery information.
*3 The handset cover comes attached to the handset.

TG2721_22AL(en)_0730_ver001.pdf 3 2012/07/30 16:53:04

Download from Www.Somanuals.com. All Manuals Search And Download.

Additional/replacement accessories

Please contact your nearest Panasonic dealer for sales information.

Accessory item	Model number
Rechargeable batteries	HHR-4MVT/2B or HHR-4MRT/2B*1
	Battery type: – Nickel metal hydride (Ni-MH) – 2 x AAA (R03) size for each handset
DECT repeater	KX-A405AL

*1 Replacement batteries may have a different capacity from that of the supplied batteries.

TG2721_22AL(en)_0730_ver001.pdf 4 2012/07/30 16:53:04

Download from Www.Somanuals.com. All Manuals Search And Download.

For your safety

To prevent severe injury and loss of life/ property, read this section carefully before using the product to ensure proper and safe operation of your product.

WARNING

Power connection

- Use only the power source marked on the product.
- Do not overload power outlets and extension cords. This can result in the risk of fire or electric shock.
- Completely insert the AC adaptor/power plug into the power outlet. Failure to do so may cause electric shock and/or excessive heat resulting in a fire.
- Regularly remove any dust, etc. from the AC adaptor/power plug by pulling it from the power outlet, then wiping with a dry cloth. Accumulated dust may cause an insulation defect from moisture, etc. resulting in a fire.
- Unplug the product from power outlets if it emits smoke, an abnormal smell, or makes an unusual noise. These conditions can cause fire or electric shock. Confirm that smoke has stopped emitting and contact an authorised service centre.
- Unplug from power outlets and never touch the inside of the product if its casing has been broken open.
- Never touch the plug with wet hands. Danger of electric shock exists.

Installation

- To prevent the risk of fire or electrical shock, do not expose the product to rain or any type of moisture.
- Do not place or use this product near automatically controlled devices such as automatic doors and fire alarms. Radio waves emitted from this product may cause such devices to malfunction resulting in an accident.
- Do not allow the AC adaptor or telephone line cord to be excessively pulled, bent or placed under heavy objects.
- It is advised not to use the equipment at a refuelling point. Users are reminded to observe restrictions on the use of radio equipment in fuel depots, chemical plants or where blasting operations are in progress.

Operating safeguards

- Unplug the product from power outlets before cleaning. Do not use liquid or aerosol cleaners.
- Do not disassemble the product.
- Do not spill liquids (detergents, cleansers, etc.) onto the telephone line cord plug, or allow it to become wet at all. This may cause a fire. If the telephone line cord plug becomes wet, immediately pull it from the telephone wall socket, and do not use.

Medical

- Consult the manufacturer of any personal medical devices, such as pacemakers or hearing aids, to determine if they are adequately shielded from external RF (radio frequency) energy. (The product operates in the frequency range of 1.88 GHz to 1.90 GHz, and the RF transmission power is 250 mW (max.).)
- Do not use the product in health care facilities if any regulations posted in the area instruct you not to do so. Hospitals or health care facilities may be using equipment that could be sensitive to external RF energy.

CAUTION

Installation and location

- Never install telephone wiring during an electrical storm.
- Never install telephone line sockets in wet locations unless the socket is specifically designed for wet locations.
- Never touch uninsulated telephone wires or terminals unless the telephone line has been disconnected at the network interface.

TG2721_22AL(en)_0730_ver001.pdf 5 2012/07/30 16:53:04

Download from Www.Somanuals.com. All Manuals Search And Download.

- Use caution when installing or modifying telephone lines.
- The AC adaptor is used as the main disconnect device. Ensure that the AC outlet is installed near the product and is easily accessible.
- This product is unable to make calls when:
  – the handset batteries need recharging or have failed.
  – there is a power failure.

Battery

- We recommend using the batteries noted on page 4. **USE ONLY rechargeable Ni-MH batteries AAA (R03) size.**
- Do not mix old and new batteries.
- Do not open or mutilate the batteries. Released electrolyte from the batteries is corrosive and may cause burns or injury to the eyes or skin. The electrolyte is toxic and may be harmful if swallowed.
- Exercise care when handling the batteries. Do not allow conductive materials such as rings, bracelets, or keys to touch the batteries, otherwise a short circuit may cause the batteries and/or the conductive material to overheat and cause burns.
- Charge the batteries provided with or identified for use with this product only, in accordance with the instructions and limitations specified in this manual.
- Only use a compatible base unit (or charger) to charge the batteries. Do not tamper with the base unit (or charger). Failure to follow these instructions may cause the batteries to swell or explode.

General notices

- Please ensure that a separate telephone, not dependent on local power, is available for emergency use.
- This equipment will be inoperable when mains power fails.
- When a failure occurs which results in the internal parts becoming accessible, disconnect the power supply cord immediately and return this unit to an authorised service centre.
- To minimise the possibility of lightning damage, when you know that a thunderstorm is coming, we recommend that you:
  – Unplug the telephone line cord from the phone socket.
  – Unplug the AC adaptor from the AC power outlet.
- No “000” or other calls can be made from this device during a mains power failure.
- The earpiece on the handset is magnetised and may retain small metallic objects.

Important safety instructions

When using your product, basic safety precautions should always be followed to reduce the risk of fire, electric shock, and injury to persons, including the following:

1. Do not use this product near water for example, near a bathtub, washbowl, kitchen sink, or laundry tub, in a wet basement or near a swimming pool.
2. Avoid using a telephone (including a cordless type) during an electrical storm. There may be a remote risk of electric shock from lightning.
3. Do not use the telephone to report a gas leak in the vicinity of the leak.
4. Use only the power cord and batteries indicated in this manual. Do not dispose of batteries in a fire. They may explode. Check with local codes for possible special disposal instructions.

SAVE THESE INSTRUCTIONS

For best performance

Base unit location/avoiding noise

The base unit and other compatible Panasonic units use radio waves to communicate with each other.

- For maximum coverage and noise-free communications, place your base unit:
  – at a convenient, high, and central location with no obstructions between the handset and base unit in an indoor environment.

TG2721_22AL(en)_0730_ver001.pdf 6 2012/07/30 16:53:04

Download from Www.Somanuals.com. All Manuals Search And Download.

– away from electronic appliances such as TVs, radios, personal computers, wireless devices, or other phones.
– facing away from radio frequency transmitters, such as external antennas of mobile phone cell stations. (Avoid putting the base unit on a bay window or near a window.)

- Coverage and voice quality depends on the local environmental conditions.
- If the reception for a base unit location is not satisfactory, move the base unit to another location for better reception.

Environment

- Keep the product away from electrical noise generating devices, such as fluorescent lamps and motors.
- The product should be kept free from excessive smoke, dust, high temperature, and vibration.
- The product should not be exposed to direct sunlight.
- Do not place heavy objects on top of the product.
- When you leave the product unused for a long period of time, unplug the product from the power outlet.
- The product should be kept away from heat sources such as radiators, cookers, etc. It should not be placed in rooms where the temperature is less than 0 °C or greater than 40 °C. Damp basements should also be avoided.
- The maximum calling distance may be shortened when the product is used in the following places: Near obstacles such as hills, tunnels, underground, near metal objects such as wire fences, etc.
- Operating the product near electrical appliances may cause interference. Move away from the electrical appliances.

Routine care

- **Wipe the outer surface of the product with a soft cloth.**
- Do not use benzine, thinner, or any abrasive powder.

Other information

CAUTION: Risk of explosion if battery is replaced by an incorrect type. Dispose of used batteries according to the instructions.

Notice for product disposal, transfer, or return

- This product can store your private/ confidential information. To protect your privacy/confidentiality, we recommend that you erase information such as phonebook or caller list entries from the memory before you dispose of, transfer, or return the product.

Information on Disposal in other Countries outside the European Union

These symbols are only valid in the European Union. If you wish to discard these items, please contact your local authorities or dealer and ask for the correct method of disposal.

Specifications

- **Standard:**
  GAP (Generic Access Profile)
- **Frequency range:**
  1.88 GHz to 1.90 GHz
- **RF transmission power:**
  Approx. 10 mW (average power per channel)
- **Power source:**
  220–240 V AC, 50/60 Hz
- **Power consumption:**
  Base unit:
  Standby: Approx. 0.54 W
  Maximum: Approx. 2.7 W
  Charger:
  Standby: Approx. 0.1 W

TG2721_22AL(en)_0730_ver001.pdf 7 2012/07/30 16:53:04

Download from Www.Somanuals.com. All Manuals Search And Download.

Maximum: Approx. 1.8 W

- **Operating conditions:**
  0 °C – 40 °C, 20 % – 80 % relative air humidity (dry)

Note:

- Design and specifications are subject to change without notice.
- The illustrations in these instructions may vary slightly from the actual product.

TG2721_22AL(en)_0730_ver001.pdf 8 2012/07/30 16:53:04

Download from Www.Somanuals.com. All Manuals Search And Download.

Setting up

Connections

- Use only the supplied Panasonic AC adaptor PNLV226AL.
- When mounting the unit on a wall, see page 39.

■ **Base unit**

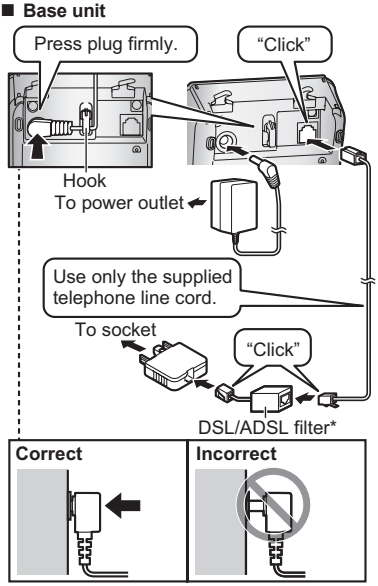

*DSL/ADSL filter (not supplied) is required if you have DSL/ADSL service.

■ **Charger**

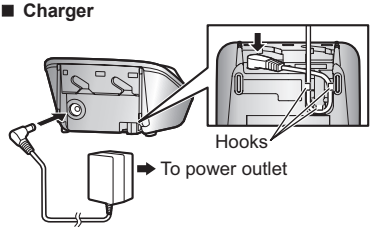

Battery installation

- USE ONLY Ni-MH batteries AAA (R03) size.
- Do NOT use Alkaline/Manganese/Ni-Cd batteries.
- Confirm correct polarities (⊕, ⊖).

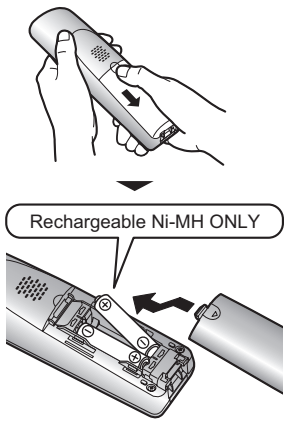

Battery charging

Charge for about 7 hours.

- When the batteries are fully charged, **"Fully charged"** is displayed.

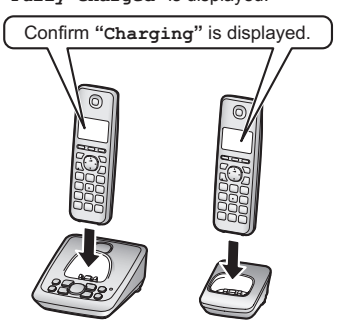

TG2721_22AL(en)_0730_ver001.pdf 9 2012/07/30 16:53:04

Download from Www.Somanuals.com. All Manuals Search And Download.

Note when setting up

Note for connections

- The AC adaptor must remain connected at all times. (It is normal for the adaptor to feel warm during use.)
- The AC adaptor should be connected to a vertically oriented or floor-mounted AC outlet. Do not connect the AC adaptor to a ceiling-mounted AC outlet, as the weight of the adaptor may cause it to become disconnected.
- The unit is not designed to be used with rotary/pulse dialling services.

During a power failure

The unit will not work during a power failure. We recommend connecting a corded-type telephone (without AC adaptor) to the same telephone line or to the same telephone line socket using a telephone double adaptor.

Note for battery installation

- Use the supplied rechargeable batteries. For replacement, we recommend using the Panasonic rechargeable batteries noted on page 4, 6.
- Wipe the battery ends (⊕, ⊖) with a dry cloth.
- Avoid touching the battery ends (⊕, ⊖) or the unit contacts.

Note for battery charging

- It is normal for the handset to feel warm during charging.
- Clean the charge contacts of the handset, base unit, and charger with a soft and dry cloth once a month. Before cleaning the unit, disconnect from power outlets and any telephone line cords. Clean more often if the unit is exposed to grease, dust, or high humidity.

Battery level

Icon	Battery level
	High
	Medium
	Low
	Needs charging.

Panasonic Ni-MH battery performance (supplied batteries)

Operation	Operating time
In continuous use	20 hours max.
Not in use (standby)	170 hours max.

Note:

- It is normal for batteries not to reach full capacity at the initial charge. Maximum battery performance is reached after a few complete cycles of charge/discharge (use).
- Actual battery performance depends on usage and ambient environment.
- Even after the batteries are fully charged, the handset can be left on the base unit or charger without any ill effect on the batteries.
- The battery level may not be displayed correctly after you replace the batteries. In this case, place the handset on the base unit or charger and let it charge for at least 7 hours.

TG2721_22AL(en)_0730_ver001.pdf 10 2012/07/30 16:53:04

Download from Www.Somanuals.com. All Manuals Search And Download.

Controls

Handset

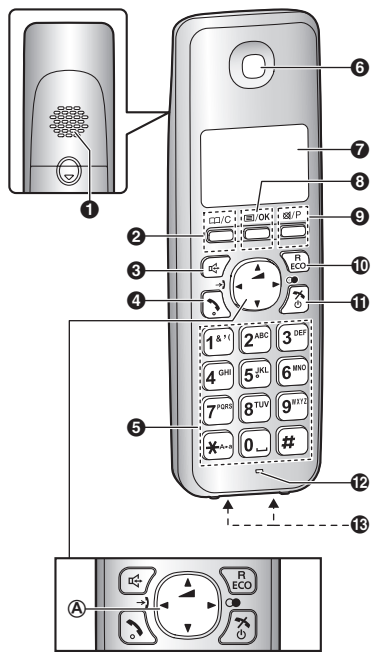

❶ **Speaker**
❷ **【📖/C】(Phonebook/Clear)**
❸ **【🔊】(Speakerphone)**
❹ **【📞】(Talk)**
❺ **Dial keypad**
❻ **Receiver**
❼ **Display**
❽ **【☰/OK】(Menu/OK)**
❾ **【⊠/P】(Mute/Pause)**
❿ **【R/ECO】**
R: Recall/Flash
ECO: Eco mode shortcut key
⓫ **【⏻】(Off/Power)**
⓬ **Microphone**
⓭ **Charge contacts**
Ⓐ **Navigator key**
– 【▲】, 【▼】, 【◄】, or 【►】: Scroll through various lists and items.
– ◿ (Volume: 【▲】 or 【▼】): Adjust the receiver or speaker volume while talking.
– 【◄】 (➔: Caller list): View the caller list.
– 【►】 (○●: Redial): View the redial list.

Base unit

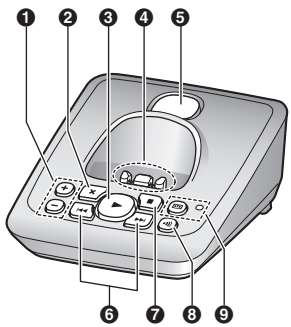

❶ **【+】/【−】(Volume up/down)**
❷ **【╳】(Erase)**
❸ **【►】(Play)**
Message indicator
❹ **Charge contacts**
❺ **Speaker**
❻ **【⏮】/【⏭】(Repeat/Skip)**
❼ **【■】(Stop)**
❽ **【📢】(Locator)**
❾ **【📼】(Answer on)**
Answer on indicator

TG2721_22AL(en)_0730_ver001.pdf 11 2012/07/30 16:53:04

Download from Www.Somanuals.com. All Manuals Search And Download.

Display

Handset display items

Item	Meaning
	Range status: The more bars visible, the closer the handset is to the base unit. ● When is flashing: Handset is searching for base unit. (page 35)
	Handset is accessing base unit (intercom*1, paging, changing base unit settings, etc.).
	Handset is on an outside call. ● When flashing slowly: The call is put on hold. ● When flashing rapidly: An incoming call is now being received.
ECO	The base unit transmission power is set to "Low". (page 13)
	Answering system is on. (page 24)
	Battery level
	Alarm is on. (page 20)
[P]	Privacy mode is on.*1 (page 19)
	New voice mail message received.*2 (page 30)
[IN USE]	● Someone is using the line.*1 ● Answering system is being used by: – another handset*1 – the base unit.

*1 KX-TG2722
*2 Voice mail subscribers only

Turning the power on/off

Power on

Press 【 】 for about 1 second.

Power off

Press 【 】 for about 2 seconds.

Initial settings

Symbol meaning:
Example: 【▲▼】: "Off"
Press 【▼】 or 【▲】 to select the words in quotations.

Display language

1 【☰/OK】
2 【▲▼】: "Handset Setup" → 【☰/OK】
3 【▲▼】: "Display Setup" → 【☰/OK】
4 【▲▼】: "Select Language" → 【☰/OK】
5 【▲▼】: Select your desired language. → 【☰/OK】 → 【 】

Note:

● If you select a language you cannot read: 【 】 → 【☰/OK】 → 【▲】 3 times → 【☰/OK】 → 【▼】 3 times → 【☰/OK】 2 times → 【▲▼】: Select your desired language. → 【☰/OK】 → 【 】

Date and time

1 【☰/OK】
2 【▲▼】: "Handset Setup" → 【☰/OK】
3 【▲▼】: "Set Date & Time" → 【☰/OK】
4 Enter the current date, month, and year.
Example: 15 July, 2012
1 5 0 7 1 2
5 Enter the current hour and minute.
Example: 9:30
0 9 3 0

TG2721_22AL(en)_0730_ver001.pdf 12 2012/07/30 16:53:04

Download from Www.Somanuals.com. All Manuals Search And Download.

- You can select 24-hour or 12-hour clock format (“**AM**” or “**PM**”) by pressing ⊠.

6 【▤/OK】→【🔧⏻】

Note:

- The date and time may be incorrect after a power failure. In this case, set the date and time again.

One touch eco mode

The **【R/ECO】** button on the handset enables you to activate the eco function with one touch. By activating eco mode, your unit can reduce the base unit transmission power by up to 90 % in standby mode.
You can turn on/off one touch eco mode by just pressing **【R/ECO】**. The default setting is “**Normal**”.

– When the one touch eco mode is on: “**Low**” is temporarily displayed and “**ECO**” is shown on the handset display.
– When the one touch eco mode is off: “**Normal**” is temporarily displayed and “**ECO**” goes off from the handset display.

Note:

- When there is another cordless phone nearby and it is in use, the base unit transmission power may not be reduced. (KX-TG2722)
- Activating one touch eco mode reduces the range of the base unit in standby mode.
- If you set the repeater mode to “**On**” (page 21), one touch eco mode is cancelled.

TG2721_22AL(en)_0730_ver001.pdf 13 2012/07/30 16:53:04

Download from Www.Somanuals.com. All Manuals Search And Download.

Making calls

1 Lift the handset and dial the phone number.
- To correct a digit, press **【📖/C】**.

2 **【📞】**

3 When you finish talking, press **【⏻】** or place the handset on the base unit or charger.

Using the speakerphone

1 Dial the phone number and press **【🔊】**.
- Speak alternately with the other party.

2 When you finish talking, press **【⏻】**.

Note:
- For best performance, use the speakerphone in a quiet environment.
- To switch back to the receiver, press **【🔊】**/**【📞】**.

Adjusting the receiver or speaker volume

Press **【▲】** or **【▼】** repeatedly while talking.

Making a call using the redial list

The last 10 phone numbers dialled are stored in the redial list (each 24 digits max.).

1 **【►】** (○●)

2 **【▲▼】**: Select the desired phone number.

3 **【📞】**

Erasing a number in the redial list

1 **【►】** (○●)

2 **【▲▼】**: Select the desired phone number. → **【☰/OK】** 2 times

3 **【▲▼】**: **"Yes"** → **【☰/OK】** → **【⏻】**

Pause (for PBX/long distance service users)

A pause is sometimes required when making calls using a PBX or long distance service.

When storing a calling card access number and/or PIN in the phonebook, a pause is also needed (page 16).

Example: If you need to dial the line access number "0" when making outside calls with a PBX:

1 0 → **【✱/P】**

2 Dial the phone number. → **【📞】**

Note:
- A 3 second pause is inserted each time **【✱/P】** is pressed.

Answering calls

1 Lift the handset and press **【📞】** or **【🔊】** when the unit rings.
- You can also answer the call by pressing any dial key from 0 to 9, ✱, or #. **(Any key answer feature)**

2 When you finish talking, press **【⏻】** or place the handset on the base unit or charger.

Auto talk

You can answer calls simply by lifting the handset off the base unit or charger. You do not need to press **【📞】**. To turn this feature on, see page 19.

Adjusting the handset ringer volume

■ **While the handset is ringing for an incoming call:**
Lift the handset and press **【▲】** or **【▼】** repeatedly to select the desired volume.

■ **Programming the volume beforehand:**

1 **【☰/OK】**

2 **【▲▼】**: **"Handset Setup"** → **【☰/OK】**

3 **【▲▼】**: **"Ringer Setup"** → **【☰/OK】**

4 **【▲▼】**: **"Ringer Volume"** → **【☰/OK】**

5 **【▲▼】**: Select the desired volume.

6 **【☰/OK】** → **【⏻】**

TG2721_22AL(en)_0730_ver001.pdf 14 2012/07/30 16:53:04

Download from Www.Somanuals.com. All Manuals Search And Download.

Temporary handset ringer off

While the handset is ringing for a call, you can turn the ringer off temporarily by pressing 【✂⏻】.

Useful features during a call

Hold

This feature allows you to put an outside call on hold.

1 Press 【☰/OK】 during an outside call.

2 【▲▼】: "Hold" → 【☰/OK】

3 To release hold, press 【📞】.
- Another handset user can take the call by pressing 【📞】. (KX-TG2722)

Note:

- If a call is kept on hold for more than 9 minutes, the call rings at your handset again. After 1 additional minute on hold, the call is disconnected.
- If another phone is connected to the same line, you can also take the call by lifting its handset.

Mute

While mute is turned on, you can hear the other party, but the other party cannot hear you.

1 Press 【⊠/P】 during conversation.

2 To return to the conversation, press 【⊠/P】 again.

Recall/flash

【R/ECO】 allows you to use the special features of your host PBX such as transferring an extension call, or accessing optional telephone services.

Note:

- To change the recall/flash time, see page 19.

Call share

Available for:
KX-TG2722

You can join an existing outside call.
To join the conversation, press 【📞】 when the other handset is on an outside call.

Note:

- To prevent other users from joining your conversations with outside callers, turn the privacy mode on (page 19).

TG2721_22AL(en)_0730_ver001.pdf 15 2012/07/30 16:53:04

Download from Www.Somanuals.com. All Manuals Search And Download.

Handset phonebook

The phonebook allows you to make calls without having to dial manually. You can add 50 names and phone numbers.

Adding entries

1 【📖/C】→【☰/OK】
2 【▲▼】: "New Entry" →【☰/OK】
3 Enter the party's name (16 characters max.). →【☰/OK】
- You can change the character entry mode by pressing【⊠/P】(page 32).

4 Enter the party's phone number (24 digits max.). →【☰/OK】
5 【▲▼】: "Save" →【☰/OK】
- To add other entries, repeat from step 3.

6 【✂⏻】

Finding and calling from a phonebook entry

Scrolling through all entries

1 【📖/C】
2 【▲▼】: Select the desired entry.
- You can scroll through the phonebook entry by pressing and holding【▼】or【▲】.

3 【📞】

Searching by first character

1 【📖/C】
- Change the character entry mode if necessary:
【⊠/P】→【▲▼】: Select the character entry mode. →【☰/OK】

2 Press the dial key (0 to 9) which contains the character you are searching for (page 32).
- Press the same dial key repeatedly to display the first entry corresponding to each character located on that dial key.
- If there is no entry corresponding to the character you selected, the next entry is displayed.

3 【▲▼】: Scroll through the phonebook if necessary.
4 【📞】

Editing entries

1 Find the desired entry (page 16). →【☰/OK】
2 【▲▼】: "Edit" →【☰/OK】
3 Edit the name if necessary (16 characters max.; page 32). →【☰/OK】
4 Edit the phone number if necessary (24 digits max.). →【☰/OK】
5 【▲▼】: "Save" →【☰/OK】
6 【✂⏻】

Erasing entries

1 Find the desired entry (page 16). →【☰/OK】
2 【▲▼】: "Erase" →【☰/OK】
3 【▲▼】: "Yes" →【☰/OK】→【✂⏻】

Copying phonebook entries

Available for:
KX-TG2722

You can copy phonebook entries between 2 handsets.

Copying an entry

1 Find the desired entry (page 16). →【☰/OK】
2 【▲▼】: "Copy" →【☰/OK】

TG2721_22AL(en)_0730_ver001.pdf 16 2012/07/30 16:53:04

Download from Www.Somanuals.com. All Manuals Search And Download.

3 Enter the handset number you wish to send the phonebook entry to.
- When an entry has been copied, **"Completed"** is displayed.
- To continue copying another entry: **[▲▼]**: **"Yes"** → **[☰/OK]** → **[▲▼]**: Select the desired entry. → **[☰/OK]**

4 **[✕⏻]**

Copying all entries

1 **[📖/C]** → **[☰/OK]**

2 **[▲▼]**: **"Copy All"** → **[☰/OK]**

3 Enter the handset number you wish to send the phonebook entry to.
- When all entries have been copied, **"Completed"** is displayed.

4 **[✕⏻]**

TG2721_22AL(en)_0730_ver001.pdf 17 2012/07/30 16:53:04

Download from Www.Somanuals.com. All Manuals Search And Download.

Programmable settings

You can customise the unit by programming the following features using the handset.

Scrolling through the display menus

1 【☰/OK】

2 Press 【▼】 or 【▲】 to select the desired main menu. → 【☰/OK】

3 Press 【▼】 or 【▲】 to select the desired item in sub-menu 1. → 【☰/OK】
- In some cases, you may need to select from sub-menu 2. → 【☰/OK】

4 Press 【▼】 or 【▲】 to select the desired setting. → 【☰/OK】
- This step may vary depending on the feature being programmed.
- To exit the operation, press 【✂⏻】.

Note:

- In the following table, < > indicates the default settings.
- In the following table, ☞ indicates the reference page number.
- Display menu order and sub-menu may vary depending on your model.

Main menu	Sub-menu 1	Sub-menu 2	☞
Caller List	–	–	23
Answer System	Play New Msg.	–	26
	Play All Msg.	–	26
	Erase All Msg.*1	–	26
	Greeting	Start REC*1 (Record greeting)	25
		Play Greeting	25
		Default*1 (Reset to pre-recorded greeting)	25
	Settings	Remote Code*1	27
		Number of Rings*1 <5 Rings>	28
		Recording Time*1 <3 Minutes>	28
		Call Screening <On>	24
	Answer On*1	–	24
	Answer Off*1	–	24
Intercom*2	–	–	31

TG2721_22AL(en)_0730_ver001.pdf 18 2012/07/30 16:53:04

Download from Www.Somanuals.com. All Manuals Search And Download.

Main menu	Sub-menu 1	Sub-menu 2	☞
Ph.Book Setup	New Entry	–	16
	Copy All*2	–	17
Handset Setup	Set Date & Time*1	–	12
	Alarm <Off>	–	20
	Ringer Setup	Ringer Volume <Level 6>	14
		Ringtone*3, *4 <Ringtone 1>	–
	Display Setup	Select Language <English>	12
		Contrast <Level 3>	–
	Register H.set	–	38
	Keytones*5 <On>	–	–
	Auto Talk*6 <Off>	–	14
Base Unit Setup*1	Ringer Volume <Level 3>	–	–
	First Ring*7 <On>	–	–
	Recall/Flash*8 <100 msec.>	–	15
	Area Code	–	20
	Privacy Mode*2, *9 <Off>	–	–
	Base Unit PIN	–	38
	Repeater Mode <Off>	–	21

*1 If you program these settings using one of the handsets, you do not need to program the same item using another handset. (KX-TG2722)
*2 KX-TG2722
*3 The ringer tone may continue to play for several seconds even if the caller has already hung up. You may either hear a dial tone or no one on the line when you answer the call.
*4 The preset melodies in this product are used with permission of © 2011 Copyrights Vision Inc.
*5 Turn this feature off if you prefer not to hear key tones while you are dialling or pressing any keys, including confirmation tones and error tones.

TG2721_22AL(en)_0730_ver001.pdf 19 2012/07/30 16:53:05

Download from Www.Somanuals.com. All Manuals Search And Download.

*6 If you subscribe to a Caller ID service and want to view the caller's information after lifting up the handset to answer a call, turn off this feature.
*7 If you do not want the unit to ring before the caller information is received, set to **"Off"**. (Caller ID subscribers only)
You can only remove the first ring if the unit rings two times or more by default, which depends on your service provider/telephone company.
*8 The recall/flash time depends on your telephone exchange or host PBX. Contact your PBX supplier if necessary.
You can access your service provider/telephone company "call waiting" service by having the recall/flash time set at **"100 msec."**, and then follow your service provider/telephone company "call waiting" instructions to operate this service.
*9 To prevent other users from joining your conversations with outside callers, turn this feature on.

Special programming

Alarm

An alarm sounds at the set time for 3 minutes once or daily. Alarm can be set for each handset.

Important:

- Set the date and time beforehand (page 12).

1 **【☰/OK】**

2 **【▲▼】: "Handset Setup" → 【☰/OK】**

3 **【▲▼】: "Alarm" → 【☰/OK】**

4 **【▲▼】**: Select the desired alarm option. → **【☰/OK】**

"Off" Turns alarm off. Go to step 8.
"Once" An alarm sounds once at the set time.
"Daily" An alarm sounds daily at the set time. Go to step 6.

5 Enter the desired date and month.

6 Set the desired time. → **【☰/OK】**

7 **【▲▼】**: Select the desired alarm tone. → **【☰/OK】**
- We recommend selecting a different ringer tone from the one used for outside calls.

8 **【☰/OK】** → **【☎/⏻】**
- When the alarm is set, ◴ is displayed.

Note:

- To stop the alarm, lift the handset and press **【☎/⏻】** or place the handset on the base unit or charger.
- When the handset is in use, the alarm will not sound until the handset is in standby mode.

Storing an area code to be deleted automatically

In some situations, phone numbers stored automatically in the caller list (page 23) will include area codes. If you do not want to dial the area code when making calls from the caller list, you can store the area code which you want the unit to delete automatically.
Example: You have stored the area code "123". If you make a call from the caller list to the phone number "123-456-7890", the unit dials "456-7890".

1 **【☰/OK】**

2 **【▲▼】: "Base Unit Setup" → 【☰/OK】**

3 **【▲▼】: "Area Code" → 【☰/OK】**

TG2721_22AL(en)_0730_ver001.pdf 20 2012/07/30 16:53:05

Download from Www.Somanuals.com. All Manuals Search And Download.

4 Enter an area code (5 digits max.). → **[≡/OK]** → **[ ]**

Increasing the range of the base unit

You can increase the signal range of the base unit by using a DECT repeater. Please use only the Panasonic DECT repeater noted on page 4. Contact your Panasonic dealer for details.

Important:

- Before registering the repeater to this base unit, you must turn the repeater mode on.
- Do not use more than one repeater at a time.

Setting the repeater mode

1 **[≡/OK]**

2 **[▲▼]**: **"Base Unit Setup"** → **[≡/OK]**

3 **[▲▼]**: **"Repeater Mode"** → **[≡/OK]**

4 **[▲▼]**: Select the desired setting. → **[≡/OK]** → **[ ]**

Note:

- After turning the repeater mode on or off, may flash on the handset momentarily. This is normal and the handset can be used once stops flashing.

Registering the DECT repeater (KX-A405AL) to the base unit

Note:

- Please use a repeater that has not yet been registered to another unit. If the repeater is registered to another unit, deregister it first, referring to the Installation Guide for the DECT repeater.

1 **Base unit:**
Press and hold **[ ]** for about 5 seconds, until the registration tone sounds.
- The next step must be completed within 90 seconds.

2 **DECT repeater:**
Connect the AC adaptor, then wait until the ⓘ indicator and indicator light green.

3 **Base unit:**
To exit the registration mode, press **[ ]**.
- The registration tone stops.

TG2721_22AL(en)_0730_ver001.pdf 21 2012/07/30 16:53:05

Download from Www.Somanuals.com. All Manuals Search And Download.

Using Caller ID service

Important:

- This unit is Caller ID compatible. To use Caller ID features (such as displaying caller phone numbers), you must subscribe to a Caller ID service. Contact your service provider/telephone company for details.

Caller ID features

When an outside call is being received, the caller information is displayed.
Caller information for the last 50 callers is logged in the caller list from the most recent call to the oldest.

- If the unit cannot receive caller information, the following is displayed:
  - **"Out of Area"**: The caller dials from an area which does not provide a Caller ID service.
  - **"Private Caller"**: The caller requests not to send caller information.
- If the unit is connected to a PBX system, caller information may not be properly received. Contact your PBX supplier.

Missed calls

If a call is not answered, the unit treats it as a missed call and **"Missed Call"** is displayed. This lets you know if you should view the caller list to see who called while you were away.
Even if only one missed call in the caller list is viewed (page 23), **"Missed Call"** disappears from the display. When you receive another new call, **"Missed Call"** is displayed again.

Note:

- Even when there are unviewed missed calls, **"Missed Call"** disappears from the standby display if the following operation is performed by one of the registered handsets:
  - Being replaced on the base unit or charger.
  - Pressing **[ ]**.

Phonebook name display

When caller information is received and it matches a phone number stored in the phonebook, the stored name in the phonebook is displayed and logged in the caller list.

Call waiting and Caller ID compatible

If you subscribe to Caller ID service, your handset displays the 2nd caller's information while talking. After you hear a call waiting tone, the caller's phone number will be displayed.
You can answer the 2nd call, keeping the 1st call on hold. Follow your service provider/ telephone company instructions using **[R/ECO]**. (Recall/flash function)

- If the phone number is stored in the phonebook with its name, the caller's name will also be displayed.
- Please contact your service provider/ telephone company for details and availability in your area.

For Caller ID Type II users

When you receive a 2nd call during a conversation, you will hear a signal tone following the call waiting tone and the **conversation will be interrupted or muted for a short period of time**. This is not a fault of the product as these events are normal.

- The tones are generated by your service provider/telephone company.

Caller list

Important:

- Only 1 person can access the caller list at a time.
- Make sure the unit's date and time setting is correct (page 12).

TG2721_22AL(en)_0730_ver001.pdf 22 2012/07/30 16:53:05

Download from Www.Somanuals.com. All Manuals Search And Download.

Viewing the caller list and calling back

1 【◄】(📞)

2 Press 【▼】 to search from the most recent call, or press 【▲】 to search from the oldest call.

3 To call back, press 【📞】.
To exit, press 【✕⏻】.

Note:

- If the entry has already been viewed or answered, "✓" is displayed, even if it was viewed or answered using another handset.
- If you do not want to dial the area code when making calls from the caller list, you can store the area code which you want the unit to delete automatically (page 20).

Editing a caller's phone number before calling back

1 【◄】(📞)

2 【▲▼】: Select the desired entry. → 【☰/OK】

3 【▲▼】: "Edit and Call" → 【☰/OK】

4 Edit the number.
- Press dial key ([0] to [9]) to add, 【📖/C】 to delete.

5 【📞】

Erasing caller information

1 【◄】(📞)

2 【▲▼】: Select the desired entry. → 【☰/OK】

3 【▲▼】: "Erase" or "Erase All" → 【☰/OK】

4 【▲▼】: "Yes" → 【☰/OK】 → 【✕⏻】

Storing caller information to the phonebook

1 【◄】(📞)

2 【▲▼】: Select the desired entry. → 【☰/OK】

3 【▲▼】: "Add Phonebook" → 【☰/OK】

4 To store the name, continue from step 3, "Adding entries", page 16.

TG2721_22AL(en)_0730_ver001.pdf 23 2012/07/30 16:53:05

Download from Www.Somanuals.com. All Manuals Search And Download.

Answering system

The answering system can answer and record calls for you when you are unavailable to answer the phone.
You can also set the unit to play a greeting message but not to record caller messages by selecting **"Greeting Only"** as the recording time setting (page 28).

Important:

- Only 1 person can access the answering system (listen to messages, record a greeting message, etc.) at a time.
- When callers leave messages, the unit records the day and time of each message. Make sure the date and time have been set correctly (page 12).

Memory capacity (including your greeting message)

The total recording capacity is about 18 minutes. A maximum of 64 messages can be recorded.

Note:

- When message memory becomes full:
  - **"Messages Full"** is shown on the handset display.
  - The answer on indicator on the base unit flashes rapidly if the answering system is turned on.
  - **"Messages"** and the total number of new messages are not displayed on the handset even if the answering system is turned on.
  - If you use the pre-recorded greeting message, the unit automatically switches to another pre-recorded greeting message asking callers to call again later.
  - If you recorded your own greeting message, the same message is still announced to callers even though their messages are not recorded.

Turning the answering system on/off

The answering system is preset to on.

Base unit

Press **[ ]** to turn on/off the answering system.

- When the answering system is turned on, the answer on indicator lights up.

Handset

1 **[/OK]**
2 **[▲▼]**: **"Answer System"** → **[/OK]**
3 **[▲▼]**: Select **"Answer On"** or **"Answer Off"**. → **[/OK]** → **[ ]**

Note:

- When the answering system is turned on, is displayed.

Call screening

While a caller is leaving a message, you can listen to the call through the handset's speaker. To adjust the speaker volume, press **[▲]** or **[▼]** repeatedly. You can answer the call by pressing **[ ]** on the handset. Call screening can be set for each handset. The default setting is **"On"**.

1 **[/OK]**
2 **[▲▼]**: **"Answer System"** → **[/OK]**
3 **[▲▼]**: **"Settings"** → **[/OK]**
4 **[▲▼]**: **"Call Screening"** → **[/OK]**
5 **[▲▼]**: Select the desired setting. → **[/OK]** → **[ ]**

Greeting message

When the unit answers a call, a greeting message is played to callers.
You can use either:
– your own greeting message
– a pre-recorded greeting message

TG2721_22AL(en)_0730_ver001.pdf 24 2012/07/30 16:53:05

Download from Www.Somanuals.com. All Manuals Search And Download.

Recording your greeting message

1 【☰/OK】
2 【▲▼】: “Answer System” → 【☰/OK】
3 【▲▼】: “Greeting” → 【☰/OK】
4 【▲▼】: “Start REC” → 【☰/OK】
5 【▲▼】: “Yes” → 【☰/OK】
6 After a beep sounds, hold the handset about 20 cm away and speak clearly into the microphone (2 minutes and 30 seconds max.).
7 Press 【☰/OK】 to stop recording.
8 【✂⏻】

Using a pre-recorded greeting message

The unit provides 2 pre-recorded greeting messages:
– If you erase or do not record your own greeting message, the unit plays a pre-recorded greeting asking callers to leave a message.
– If the message recording time (page 28) is set to “Greeting Only”, callers’ messages are not recorded and the unit plays a different pre-recorded greeting message asking callers to call again.

Resetting to a pre-recorded greeting message

If you want to use a pre-recorded greeting message once you record your own greeting message, you need to erase your own greeting message.

1 【☰/OK】
2 【▲▼】: “Answer System” → 【☰/OK】
3 【▲▼】: “Greeting” → 【☰/OK】
4 【▲▼】: “Default” → 【☰/OK】 2 times
5 【✂⏻】

Playing back the greeting message

1 【☰/OK】
2 【▲▼】: “Answer System” → 【☰/OK】
3 【▲▼】: “Greeting” → 【☰/OK】
4 【▲▼】: “Play Greeting” → 【☰/OK】
5 【✂⏻】

Listening to messages using the base unit

When new messages have been recorded, 【►】 on the base unit flashes.
Press 【►】.
- If new messages have been recorded, the base unit plays back new messages.
- If there are no new messages, the base unit plays back all messages.

Operating the answering system during playback

Key	Operation
【+】 or 【−】	Adjust the speaker volume
【⏮】	Repeat message*1
【⏭】	Skip message
【■】	Stop playback
【✕】	Erase currently playing message

*1 If pressed within the first 5 seconds of a message, the previous message is played.

Erasing all messages

Press 【✕】 2 times while the unit is not in use.

TG2721_22AL(en)_0730_ver001.pdf 25 2012/07/30 16:53:05

Download from Www.Somanuals.com. All Manuals Search And Download.

Listening to messages using the handset

When new messages have been recorded, **"Messages"** is displayed on the handset with the total number of new messages.

1 **【☰/OK】**
2 **【▲▼】**: **"Answer System"** → **【☰/OK】**
3 **【▲▼】**: Select **"Play New Msg."** or **"Play All Msg."**. → **【☰/OK】**
4 When finished, press **【✂⏻】**.

Note:

- To switch to the receiver, press **【📞】**.

Operating the answering system

【☰/OK】 → **【▲▼】**: **"Answer System"** → **【☰/OK】**

Key	Operation
【▲】 or **【▼】**	Adjust the receiver or speaker volume (during playback)
1 or **【◄】**	Repeat message (during playback)*1
2 or **【►】**	Skip message (during playback)
3	Enter the **"Settings"** menu
4	Play new messages
5	Play all messages
6	Play greeting message
7 6	Record greeting message
8	Turn answering system on
【☰/OK】	Pause message*2
9	Stop recording Stop playback
0	Turn answering system off
✱ 4	Erase currently playing message
✱ 5	Erase all messages
✱ 6	Reset to a pre-recorded greeting message

*1 If pressed within the first 5 seconds of a message, the previous message is played.
*2 To resume playback:
【▲▼】: **"Play"** → **【☰/OK】**

Calling back (Caller ID subscribers only)

If caller information is received for the call, you can call the caller back while listening to a message.

1 Press **【☰/OK】** during playback.
2 **【▲▼】**: **"Call Back"** → **【☰/OK】**

Editing the number before calling back

1 Press **【☰/OK】** during playback.
2 **【▲▼】**: **"Edit and Call"** → **【☰/OK】**
3 Edit the number. → **【📞】**

Erasing all messages

1 **【☰/OK】**
2 **【▲▼】**: **"Answer System"** → **【☰/OK】**
3 **【▲▼】**: **"Erase All Msg."** → **【☰/OK】**
4 **【▲▼】**: **"Yes"** → **【☰/OK】** → **【✂⏻】**

Remote operation

Using a touch-tone phone, you can call your phone number from outside and access the unit to listen to messages or change answering system settings. The unit's voice guidance prompts you to press certain dial keys to perform different operations.

TG2721_22AL(en)_0730_ver001.pdf 26 2012/07/30 16:53:05

Download from Www.Somanuals.com. All Manuals Search And Download.

Remote access code

A 3-digit remote access code must be entered when operating the answering system remotely. This code prevents unauthorised parties from listening to your messages remotely.

Important:

- In order to operate the answering system remotely, you must first set a remote access code.

1 【☰/OK】
2 【▲▼】: "Answer System" → 【☰/OK】
3 【▲▼】: "Settings" → 【☰/OK】
4 【▲▼】: "Remote Code" → 【☰/OK】
5 To turn on remote operation, enter the desired 3-digit remote access code.
6 【☰/OK】→【✂⏻】

Deactivating remote operation

Press ✳ in step 5 on "Remote access code", page 27.

- The entered remote access code is deleted.

Using the answering system remotely

1 Dial your phone number from a touch-tone phone.
2 After the greeting message starts, enter your remote access code.
3 Follow the voice guidance prompts as necessary or control the unit using remote commands (page 27).
4 When finished, hang up.

Voice guidance

During remote operation, the unit's voice guidance starts and prompts you to press 1 to perform a specific operation, or press 2 to listen to more available operations.

Note:

- If you do not press any dial keys within 10 seconds after a voice guidance prompt, the unit disconnects your call.

Remote commands

You can press dial keys to access certain answering system functions without waiting for the voice guidance to prompt you.

Key	Operation
1	Repeat message (during playback)*1
2	Skip message (during playback)
4	Play new messages
5	Play all messages
6	Play greeting message
7	Record greeting message
9	Stop recording Stop playback
0	Turn answering system off
✳4	Erase currently playing message
✳5	Erase all messages
✳6	Reset to a pre-recorded greeting message (during greeting message playback)
✳#	End remote operation (or hang up)

*1 If pressed within the first 5 seconds of a message, the previous message is played.

Turning on the answering system remotely

If the answering system is off, you can turn it on remotely.

1 Dial your phone number from a touch-tone phone.
2 Let the phone ring 15 times.
- A long beep is heard.

TG2721_22AL(en)_0730_ver001.pdf 27 2012/07/30 16:53:05

Download from Www.Somanuals.com. All Manuals Search And Download.

3 Enter your remote access code within 10 seconds after the long beep.
- The greeting message is played back.
- You can either hang up, or enter your remote access code again and begin remote operation (page 26).

Answering system settings

Number of rings before the unit answers a call

You can change the number of times the phone rings **"Number of Rings"** before the unit answers a call. You can select 2 to 9 rings, or **"Auto"**.
The default setting is **"5 Rings"**.
"Auto": The unit's answering system answers at the end of the 2nd ring when new messages have been recorded, or at the end of the 5th ring when there are no new messages. If you call your phone from outside to listen to new messages (page 27), you know that there are no new messages when the phone rings for the 3rd time. You can then hang up without being charged for the call.

1 【▤/OK】
2 【▲▼】: **"Answer System"** → 【▤/OK】
3 【▲▼】: **"Settings"** → 【▤/OK】
4 【▲▼】: **"Number of Rings"** → 【▤/OK】
5 【▲▼】: Select the desired setting. → 【▤/OK】 → 【↶⏻】

For service provider voice mail subscribers

To receive voice mail and use the answering system properly, please note the following:
- "Voice mail" is a service provided by your service provider/telephone company (page 30). You will need to first subscribe or activate this service through your service provider/telephone company. Contact your service provider/telephone company on how to operate this service and how you will be notified that you have messages on your voice mail.
  To use this service, you will be required to leave your answering machine off on your unit.
  This will allow the voice mail to receive any messages.
- To use the unit's answering machine rather than the voice mail service provided by your service provider/telephone company, please contact your service provider/telephone company to have it removed or deactivated permanently or temporarily. Alternatively you can leave this service connected and change the **"Number of Rings"** to a shorter duration on your unit so your unit's answering machine can pick up the call prior to the voice mail provided by your service provider/telephone company.

Caller's recording time

You can change the maximum message recording time allowed for each caller. The default setting is **"3 Minutes"**.

1 【▤/OK】
2 【▲▼】: **"Answer System"** → 【▤/OK】
3 【▲▼】: **"Settings"** → 【▤/OK】
4 【▲▼】: **"Recording Time"** → 【▤/OK】
5 【▲▼】: Select the desired setting. → 【▤/OK】 → 【↶⏻】

Selecting "Greeting Only"

You can select **"Greeting Only"** which sets the unit to announce a greeting message to callers but not record messages.
Select **"Greeting Only"** in step 5 on "Caller's recording time", page 28.

Note:
- When you select **"Greeting Only"**:
  – If you do not record your own message, the unit will play the pre-recorded greeting-only message asking callers to call again later.

TG2721_22AL(en)_0730_ver001.pdf 28 2012/07/30 16:53:05

Download from Www.Somanuals.com. All Manuals Search And Download.

– If you use your own message, record the greeting-only message asking callers to call again later (page 25).

TG2721_22AL(en)_0730_ver001.pdf 29 2012/07/30 16:53:05

Download from Www.Somanuals.com. All Manuals Search And Download.

Voice mail service

Voice mail is an automatic answering service offered by your service provider/telephone company. After you subscribe to this service, your service provider/telephone company's voice mail system answers calls for you when you are unavailable to answer the phone or when your line is busy. Messages are recorded by your service provider/telephone company, not your telephone.
When you have new messages, ✉ is displayed on the handset if message indication service is available. Please contact your service provider/telephone company for details of this service.

Important:

- If ✉ still remains on the display even after you have listened to new messages, turn it off by pressing and holding # for 2 seconds.
- To use the voice mail service provided by your service provider/telephone company rather than the unit's answering system, turn off the answering system (page 24). For details, see page 28.

TG2721_22AL(en)_0730_ver001.pdf 30 2012/07/30 16:53:05

Download from Www.Somanuals.com. All Manuals Search And Download.

Intercom

Available for:
KX-TG2722

Intercom calls can be made between handsets.

Note:

- When paging the handset, the paged handset beeps for 1 minute.
- If you receive an outside call while talking on the intercom, you hear 2 tones. To answer the call, press 【✆】, then press 【✆】.

Making an intercom call

1 【☰/OK】
2 【▲▼】: "Intercom" → 【☰/OK】
3 To page a specific handset, enter the handset number.
   - To stop paging, press 【✆】.
4 When you finish talking, press 【✆】.

Answering an intercom call

1 Press 【✆】 to answer the page.
2 When you finish talking, press 【✆】.

Handset locator

You can locate a misplaced handset by paging it.

1 **Base unit:** Press 【📢】.
   - All registered handsets beep for 1 minute.
2 To stop paging:
   Base unit: Press 【📢】.
   Handset: Press 【✆】.

Transferring calls, conference calls

Available for:
KX-TG2722

Outside calls can be transferred or a conference call with an outside party can be made between 2 handsets.

1 During an outside call, press 【☰/OK】.
2 【▲▼】: "Intercom" → 【☰/OK】
   - flashes to indicate the outside call is on hold.
3 Enter the desired handset number you want to transfer to.
4 Wait for the paged party to answer.
   - If the paged party does not answer, press 【✆】 to return to the outside call.
5 **To complete the transfer:**
   Press 【✆】.
   - The outside call is being routed to the destination unit.

   To establish a conference call:
   Press 3.
   - To leave the conference, press 【✆】. The other 2 parties can continue the conversation.
   - To put the outside call on hold, press 【☰/OK】. → 【▲▼】: "Hold" → 【☰/OK】
     To resume the conference, press 3.

Answering a transferred call

Press 【✆】 to answer the page.

TG2721_22AL(en)_0730_ver001.pdf 31 2012/07/30 16:53:05

Download from Www.Somanuals.com. All Manuals Search And Download.

Character entry

The dial keys are used to enter characters and numbers. Each dial key has multiple characters assigned to it. The characters that can be entered depend on the character entry mode (page 32).

– Press **[◄]** or **[►]** to move the cursor left or right.
– Press dial keys to enter characters and numbers.
– Press **[📖/C]** to erase the character or number highlighted by the cursor. Press and hold **[📖/C]** to erase all characters or numbers.
– Press ✳ (A→a) to switch between uppercase and lowercase.
– To enter another character located on the same dial key, press **[►]** to move the cursor to the next space, then press the appropriate dial key.

Character entry modes

The available character entry modes are Alphabet (ABC), Numeric (0-9), Greek (ΑΒΓ), Extended 1 (AÄÅ), Extended 2 (SŚŠ), and Cyrillic (АБВ). When in these entry modes except Numeric, you can select which character is entered by pressing a dial key repeatedly.

When the unit displays the character entry screen:
[⊠/P] → **[▲▼]**: Select a character entry mode. → **[☰/OK]**

Note:

- ␣ in the following tables represents a single space.

Alphabet character table (ABC)

0	1	2	3	4	5	6	7	8	9
␣ 0	␣ # & ' ( ) ✳ , - . / 1	A B C 2	D E F 3	G H I 4	J K L 5	M N O 6	P Q R S 7	T U V 8	W X Y Z 9
		a b c 2	d e f 3	g h i 4	j k l 5	m n o 6	p q r s 7	t u v 8	w x y z 9

Numeric entry table (0-9)

0	1	2	3	4	5	6	7	8	9
0	1	2	3	4	5	6	7	8	9

Greek character table (ΑΒΓ)

0	1	2	3	4	5	6	7	8	9
␣ 0	␣ # & ' ( ) ✳ , - . / 1	A B Γ 2	Δ E Z 3	H Θ I 4	K Λ M 5	N Ξ O 6	Π P Σ 7	T Y Φ 8	X Ψ Ω 9

TG2721_22AL(en)_0730_ver001.pdf 32 2012/07/30 16:53:05

Download from Www.Somanuals.com. All Manuals Search And Download.

Extended 1 character table (AÄÅ)

0	1	2	3	4	5	6	7	8	9
␣ 0	␣ # & ' ( ) * , - . / 1	A À Á Â Ã Ä Å Æ B C Ç 2	D E È É Ê Ë Ē F 3	G Ğ H I Ì Í Î Ï Ī İ Ĭ 4	J K L 5	M N Ñ O Ò Ó Ô Õ Ö ø 6	P Q R S Ş ß 7	T U Ù Ú Û Ü Ũ V 8	W Ŵ X Y ŷ Z 9
		a à á â ã ä å æ b c ç 2	d e è é ê ë ē f 3	g ğ h i ì í î ï ī ı ĭ 4	j k l 5	m n ñ o ò ó ô õ ö ø 6	p q r s Ş ß 7	t u ù ú û ü ũ v 8	w Ŵ x y ŷ z 9

- The following are used for both uppercase and lowercase: ø Ş Ŵ ŷ

Extended 2 character table (SŚŠ)

0	1	2	3	4	5	6	7	8	9
␣ 0	␣ # & ' ( ) * , - . / 1	A Á Ä Ą B C Ć Č 2	D Ď E É Ę Ě F 3	G H I Í 4	J K L Ł Ĺ Ľ 5	M N Ń Ň O Ó Ö Ő 6	P Q R Ŕ Ř S Ś Š 7	T Ť U Ú Ü Ű ů V 8	W X Y ỳ Ý Z Ź Ż Ž 9
		a á ä ą b c ć č 2	d ď e é ę ě f 3	g h i í 4	j k l ł Ĺ Ľ 5	m n ń ň o ó ö ő 6	p q r ŕ ř s ś š 7	t ť u ú ü ű ů v 8	w x y ỳ ý z ź ż ž 9

- The following are used for both uppercase and lowercase:

  Ą Ć Č Ę Ł Ĺ Ľ Ń Ŕ Ś Š ů ỳ Ź Ż Ž

Cyrillic character table (АБВ)

0	1	2	3	4	5	6	7	8	9
␣ 0 Ґ Є І Ї ў	␣ # & ' ( ) * , - . / 1	А Б В Г 2	Д Е Ж З 3	И Й К Л 4	М Н О П 5	Р С Т У 6	Ф Х Ц Ч 7	Ш Щ Ъ Ы 8	Ь Э Ю Я 9

TG2721_22AL(en)_0730_ver001.pdf 33 2012/07/30 16:53:05

Download from Www.Somanuals.com. All Manuals Search And Download.

Error messages

Display message	Cause/solution
`Error`	● Recording was too short. Try again.
`Failed`	● Phonebook copy failed (page 16). Confirm the other handset (the receiver) is in standby mode and try again.
`Incomplete`	● The receiver's phonebook memory is full. Erase the unwanted phonebook entries from the other handset (the receiver) and try again.
`Memory Full`	● The phonebook memory is full. Erase unwanted entries (page 16).
`Messages Full`	● Message memory is full. Erase unwanted messages (page 25, 26).
`No link to base. Reconnect AC adaptor.`	● The handset has lost communication with the base unit. Move closer to the base unit and try again. ● Unplug the base unit's AC adaptor to reset the unit. Reconnect the adaptor and try again. ● The handset's registration may have been cancelled. Re-register the handset (page 38).

Troubleshooting

If you still have difficulties after following the instructions in this section, disconnect the base unit's AC adaptor and turn off the handset, then reconnect the base unit's AC adaptor and turn on the handset.

General use

Problem	Cause/solution
The handset does not turn on even after installing charged batteries.	● Place the handset on the base unit or charger to turn on the handset.
The unit does not work.	● Make sure the batteries are installed correctly (page 9). ● Fully charge the batteries (page 9). ● Check the connections (page 9). ● Unplug the base unit's AC adaptor to reset the unit and turn off the handset. Reconnect the adaptor, turn on the handset and try again. ● The handset has not been registered to the base unit. Register the handset (page 38).
The handset display is blank.	● The handset is not turned on. Turn the power on (page 12).

TG2721_22AL(en)_0730_ver001.pdf 34 2012/07/30 16:53:05

Download from Www.Somanuals.com. All Manuals Search And Download.

Problem	Cause/solution
I cannot hear a dial tone.	• Make sure that you are using the supplied telephone line cord. Your old telephone line cord may have a different wiring configuration. • The base unit's AC adaptor or telephone line cord is not connected. Check the connections. • Disconnect the base unit from the telephone line and connect the line to a known working telephone. If the working telephone operates properly, contact our service personnel to have the unit repaired. If the working telephone does not operate properly, contact your service provider/telephone company.
I cannot use the intercom or phonebook copy feature.	• These features are available between the handsets. Although the handset displays **"Intercom"**, **"Copy All"**, or **"Copy"**, these features are not available for single handset models.

Programmable settings

Problem	Cause/solution
The display is in a language I cannot read.	• Change the display language (page 12).
I cannot activate the eco mode.	• You cannot set eco mode when you set the repeater mode **"On"**. If required, set the repeater mode to **"Off"** (page 21).

Battery recharge

Problem	Cause/solution
The handset beeps and/or flashes.	• Battery charge is low. Fully charge the batteries (page 9).
I fully charged the batteries, but – still flashes or – the operating time seems to be shorter.	• Clean the battery ends (⊕, ⊖) and the charge contacts with a dry cloth and charge again. • It is time to replace the batteries (page 9).

Making/answering calls, intercom

Problem	Cause/solution
is flashing.	• The handset is too far from the base unit. Move closer. • The base unit's AC adaptor is not properly connected. Reconnect AC adaptor to the base unit. • The handset is not registered to the base unit. Register it (page 38). • Activating one touch eco mode reduces the range of the base unit in standby mode. If required, turn eco mode off (page 13).

TG2721_22AL(en)_0730_ver001.pdf 35 2012/07/30 16:53:05

Download from Www.Somanuals.com. All Manuals Search And Download.

Useful Information

Problem	Cause/solution
Noise is heard, sound cuts in and out.	● You are using the handset or base unit in an area with high electrical interference. Re-position the base unit and use the handset away from sources of interference. ● Move closer to the base unit. ● If you use a DSL/ADSL service, we recommend connecting a filter (contact your DSL/ADSL service provider) to the telephone line between the base unit and the telephone line socket. Contact your DSL/ADSL provider for details.
The handset does not ring.	● The ringer volume is turned off. Adjust ringer volume (page 14).
The base unit does not ring.	● The ringer volume is turned off. Adjust ringer volume (page 19).
I cannot make a call.	● The unit is not designed to be used with rotary/pulse dialling services.

Caller ID

Problem	Cause/solution
Caller information is not displayed.	● You must subscribe to a Caller ID service. Contact your service provider/telephone company for details. ● If your unit is connected to any additional telephone equipment, remove and plug the unit directly into the wall socket. ● If you use a DSL/ADSL service, we recommend connecting a filter (contact your DSL/ADSL service provider) to the telephone line between the base unit and the telephone line socket. Contact your DSL/ADSL provider for details. ● Other telephone equipment may be interfering with this unit. Disconnect the other equipment and try again.
Caller information is slow to display.	● Depending on your service provider/telephone company, the unit may display the caller's information at the 2nd ring or later. Set the first ring to **"Off"** (page 19). ● Move closer to the base unit.
The name stored in the phonebook is not fully displayed while an outside call is being received.	● Edit the phonebook entry name to fit in 1 line of text (page 16).

TG2721_22AL(en)_0730_ver001.pdf 36 2012/07/30 16:53:06

Download from Www.Somanuals.com. All Manuals Search And Download.

Answering system

Problem	Cause/solution
The unit does not record new messages.	● The answering system is turned off. Turn it on (page 24). ● The message memory is full. Erase unwanted messages (page 25). ● The recording time is set to "**Greeting Only**". Change the setting (page 28). ● If you subscribe to a voice mail service, messages are recorded by your service provider/telephone company, not your telephone. Change the unit's number of rings setting or contact your service provider/telephone company (page 28).
I cannot operate the answering system remotely.	● The remote access code is not set. Set the remote access code (page 27). ● You are entering the wrong remote access code. If you have forgotten your remote access code, enter the remote access code setting to check your current code (page 27). ● The answering system is turned off. Turn it on (page 27).

Liquid damage

Problem	Cause/solution
Liquid or other form of moisture has entered the handset/base unit.	● Disconnect the AC adaptor and telephone line cord from the base unit. Remove the batteries from the handset and leave to dry for at least 3 days. After the handset/base unit are completely dry, reconnect the AC adaptor and telephone line cord. Insert the batteries and charge fully before use. If the unit does not work properly, contact an authorised service centre.

Caution:

- To avoid permanent damage, do not use a microwave oven to speed up the drying process.

TG2721_22AL(en)_0730_ver001.pdf 37 2012/07/30 16:53:06

Download from Www.Somanuals.com. All Manuals Search And Download.

Registering a handset to the base unit

1 **Handset:**
【▤/OK】

2 【▲▼】: "Handset Setup" → 【▤/OK】

3 【▲▼】: "Register H.set" → 【▤/OK】

4 **Base unit:**
Press and hold 【•))】 for about 5 seconds, until the registration tone sounds.
- If all registered handsets start ringing, press 【•))】 again to stop, then repeat this step. (KX-TG2722)
- The next step must be completed within 90 seconds.

5 **Handset:**
Wait until "Enter Base PIN" is displayed. → Enter the base unit PIN (default: "0000"). → 【▤/OK】
- If you forget your PIN, contact an authorised service centre.
- When the handset has been registered successfully, Y stops flashing.

Deregistering a handset

1 【▤/OK】

2 【▲▼】: "Base Unit Setup" → 【▤/OK】

3 3 3 5 → 【▤/OK】
- All handsets registered to the base unit are displayed.

4 Enter the desired handset number you want to cancel. → 【▤/OK】

5 【▲▼】: "Yes" → 【▤/OK】
- A confirmation tone sounds.
- The handset does not beep when cancelling its own registration.

6 【✂⏻】

Changing the base unit PIN (Personal Identification Number)

Important:

- If you change the PIN, please make note of your new PIN. The unit will not reveal the PIN to you. If you forget your PIN, contact an authorised service centre.

1 【▤/OK】

2 【▲▼】: "Base Unit Setup" → 【▤/OK】

3 【▲▼】: "Base Unit PIN" → 【▤/OK】

4 Enter the current 4-digit base unit PIN (default: "0000").

5 Enter the new 4-digit base unit PIN. → 【▤/OK】 → 【✂⏻】

TG2721_22AL(en)_0730_ver001.pdf 38 2012/07/30 16:53:06

Download from Www.Somanuals.com. All Manuals Search And Download.

Wall mounting

Note:

- Make sure that the wall and the fixing method are strong enough to support the weight of the unit.
- Drive the screws (not supplied) into the wall.

■ **Base unit**

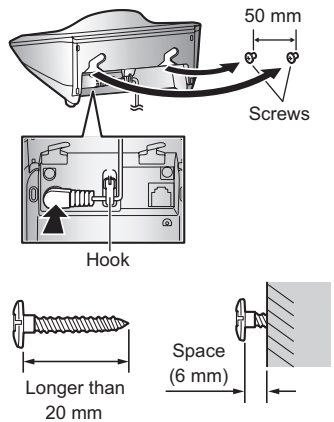

■ **Charger**

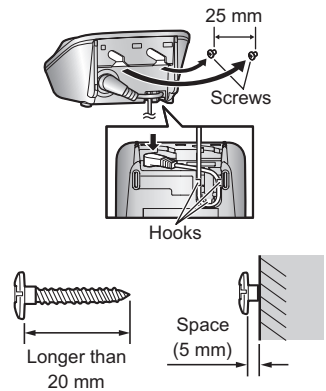

Wall mounting template

■ **Base unit**

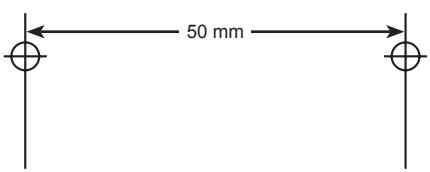

■ **Charger**

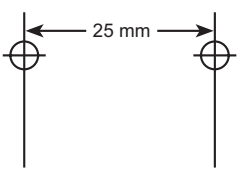

TG2721_22AL(en)_0730_ver001.pdf 39 2012/07/30 16:53:06

Download from Www.Somanuals.com. All Manuals Search And Download.

Index

A Alarm: *20*
Answering calls: *14*
Answering system: *24*
Call screening: *24*
Erasing messages: *25*, *26*, *27*
Greeting message: *24*
Greeting only: *28*
Listening to messages: *25*, *26*, *27*
Number of rings: *28*
Recording time: *28*
Remote access code: *27*
Remote operation: *26*
Turning on/off: *24*, *26*, *27*
Area code: *20*
Auto talk: *14*, *19*
B Battery: *9*, *10*
C Call share: *15*
Call waiting and Caller ID compatible: *22*
Caller ID service: *22*
Caller list: *22*
Caller list edit: *23*
Character entry: *32*
Conference calls: *31*
D Date and time: *12*
Display
Contrast: *19*
Language: *12*
E Eco mode: *13*
Error messages: *34*
F First ring: *19*
H Handset
Deregistration: *38*
Locator: *31*
Registration: *38*
Hold: *15*
I Intercom: *31*
K Keytones: *19*
M Making calls: *14*
Missed calls: *22*
Mute: *15*
P Pause: *14*
Phonebook: *16*
PIN: *38*
Power failure: *10*
Power on/off: *12*
Privacy mode: *19*
R Recall/flash: *15*
Redialling: *14*
Repeater: *21*
Ringer tone: *19*
S Speakerphone: *14*
T Transferring calls: *31*
Troubleshooting: *34*
V Voice mail: *30*
Volume
Receiver: *14*
Ringer (Base unit): *19*
Ringer (Handset): *14*, *19*
Speaker: *14*
W Wall mounting: *39*

TG2721_22AL(en)_0730_ver001.pdf 40 2012/07/30 16:53:06

Download from Www.Somanuals.com. All Manuals Search And Download.

TG2721_22AL(en)_0730_ver001.pdf 41 2012/07/30 16:53:06

Download from Www.Somanuals.com. All Manuals Search And Download.

Notes

TG2721_22AL(en)_0730_ver001.pdf 42 2012/07/30 16:53:06

Download from Www.Somanuals.com. All Manuals Search And Download.

TG2721_22AL(en)_0730_ver001.pdf 43 2012/07/30 16:53:06

Download from Www.Somanuals.com. All Manuals Search And Download.

For your future reference
We recommend keeping a record of the following information to assist with any repair under warranty.

Serial No.	Date of purchase
(found on the bottom of the base unit)	
Name and address of dealer	

Attach your purchase receipt here.

Customer Care Centre Tel. No.: 132600
or website www.panasonic.com.au

N52

Sales Department:
Panasonic Australia Pty. Limited
1 Innovation Road, Macquarie Park NSW 2113, Australia

Panasonic System Networks Co., Ltd.
1-62, 4-chome, Minoshima, Hakata-ku, Fukuoka 812-8531, Japan

© Panasonic System Networks Co., Ltd. 2012

PNQX5404ZA

PNQX5404ZA TT0912MU0 (A)

Download from Www.Somanuals.com. All Manuals Search And Download.

Free Manuals Download Website

http://myh66.com

http://usermanuals.us

http://www.somanuals.com

http://www.4manuals.cc

http://www.manual-lib.com

http://www.404manual.com

http://www.luxmanual.com

http://aubethermostatmanual.com

Golf course search by state

http://golfingnear.com

Email search by domain

http://emailbydomain.com

Auto manuals search

http://auto.somanuals.com

TV manuals search

http://tv.somanuals.com