Operator's Guide

The Printronix L5535 Multifunction Printer

Consumables Information

Printronix® has years of experience designing printer imaging systems. For the best possible performance of your Printronix printer, use Genuine Printronix parts and supplies.

For the name of your nearest Printronix full service distributor, call:

United States	(800) 733-1900 or (714) 368-2300
Europe	(33) 1-46-25-1900
Singapore	(65) 548-4116

Consumable Item	Part Number	Replacement Interval (in Pages)[1]
Toner cartridge	703532-001	21,000
Waste toner bottle	202984-001	150,000
Photoreceptor drum	703535-001	150 - 300,000 See Note 2
Developer	703548-001	150,000
Developing Unit	705739-001	600,000
Note 1: Varies with paper size, media type, and toner coverage. Note 2: Inspect every 150,000 pages; clean if needed. Replace at 300,000 pages or sooner of print quality is no longer acceptable. Drum life is dependent upon media used and proper maintenance and operation of the printer. Print media other than bond paper (e.g., labels, card stock, plastic, or vinyl) may reduce drum life as much as 50%.		

For more information, please go to our website at **www.printronix.com**.

L5535 Multifunction Printer

Operator's Guide

171638-001B

Software License Agreement

CAREFULLY READ THE FOLLOWING TERMS AND CONDITIONS BEFORE USING THIS PRINTER. USING THIS PRINTER INDICATES YOUR ACCEPTANCE OF THESE TERMS AND CONDITIONS. IF YOU DO NOT AGREE TO THESE TERMS AND CONDITIONS, PROMPTLY RETURN THE PRINTER AND ALL ACCOMPANYING HARDWARE AND WRITTEN MATERIALS TO THE PLACE YOU OBTAINED THEM, AND YOUR MONEY WILL BE REFUNDED.

Definitions.

“Software” shall mean the digitally encoded, machine-readable data and program. The term “Software Product” includes the Software resident in the printer and its documentation. The Software Product is licensed (not sold) to you, and Printronix, Inc. either owns or licenses from other vendors who own, all copyright, trade secret, patent and other proprietary rights in the Software Product.

License.

1. Authorized Use. You agree to accept a non-exclusive license to use the Software resident in the printer solely for your own customary business or personal purposes.
2. Restrictions.
    a. To protect the proprietary rights of Printronix, Inc., you agree to maintain the Software Product and other proprietary information concerning the typefaces in strict confidence.
    b. You agree not to duplicate or copy the Software Product.
    c. You shall not sublicense, sell, lease, or otherwise transfer all or any portion of the Software Product separate from the printer, without the prior written consent of Printronix, Inc.
    d. You may not modify or prepare derivative works of the Software Product.

e. You may not transmit the Software Product over a network, by telephone, or electronically using any means; or reverse engineer, decompile or disassemble the Software.

f. You agree to keep confidential and use your best efforts to prevent and protect the contents of the Software Product from unauthorized disclosure or use.

3. Transfer. You may transfer the Software Product with the printer, but only if the recipient agrees to accept the terms and conditions of this Agreement. Your license is automatically terminated if you transfer the Software Product and printer.

Limited Software Product Warranty

Printronix, Inc. warrants that for ninety (90) days after delivery, the Software will perform in accordance with specifications published by Printronix, Inc. Printronix, Inc. does not warrant that the Software is free from all bugs, errors and omissions.

Remedy

Your exclusive remedy and the sole liability of Printronix, Inc. in connection with the Software is replacement of defective software with a copy of the same version and revision level.

Disclaimer of Warranties and Limitation of Remedies

1. THE PARTIES AGREE THAT ALL OTHER WARRANTIES, EXPRESS OR IMPLIED, INCLUDING WARRANTIES OF FITNESS FOR A PARTICULAR PURPOSE AND MERCHANTABILITY ARE EXCLUDED.
   Printronix, Inc. does not warrant that the functions contained in the Software will meet your requirements or that the operation of the Software will be uninterrupted or error free.
   Printronix, Inc. reserves the right to make changes and/or improvements in the Software without notice at any time.

2. IN NO EVENT WILL PRINTRONIX, INC. BE LIABLE FOR LOST PROFITS, LOST DATA, BUSINESS INTERRUPTIONS, OR ANY OTHER DIRECT, INDIRECT, INCIDENTAL OR CONSEQUENTIAL DAMAGES ARISING OUT OF THE USE OF OR INABILITY TO USE THIS PRODUCT, EVEN IF PRINTRONIX, INC. HAS BEEN ADVISED OF THE

POSSIBILITY OF SUCH DAMAGES, OR ANY DAMAGES CAUSED BY THE ABUSE OR MANIPULATION OF THE SOFTWARE. SOME STATES DO NOT ALLOW THE EXCLUSION OR LIMITATION OF LIABILITY FOR CONSEQUENTIAL OR INCIDENTAL DAMAGES, SO THE ABOVE LIMITATION MAY NOT APPLY TO YOU.

3. Printronix, Inc. will not be liable for any loss or damage caused by delay in furnishing a Software Product or any other performance under this Agreement.
4. Our entire liability and your exclusive remedies for our liability of any kind (including liability for negligence except liability for personal injury caused solely by our negligence) for the Software Product covered by this Agreement and all other performance or nonperformance by us under or related to this Agreement are limited to the remedies specified by this Agreement.
5. California law governs this Agreement.

Termination of License Agreement

This License shall continue until terminated. This license may be terminated by agreement between you and Printronix, Inc. or by Printronix, Inc. if you fail to comply with the terms of this License and such failure is not corrected within thirty (30) days after notice. When this License is terminated, you shall return to the place you obtained them, the printer and all copies of the Software and documentation.

U.S. Government Restricted Rights

Use, duplication or disclosure by the Government is subject to restrictions as set forth in the Rights in Technical Data and Computer Software clause at FAR 242.227-7013, subdivision (b) (3) (ii) or subparagraph (c) (1) (ii), as appropriate. Further use, duplication or disclosure is subject to restrictions applicable to restricted rights software as set forth in FAR 52.227-19 (c) (2).

Acknowledgement of Terms and Conditions

YOU ACKNOWLEDGE THAT YOU HAVE READ THIS AGREEMENT, UNDERSTAND IT, AND AGREE TO BE BOUND

BY ITS TERMS AND CONDITIONS. NEITHER PARTY SHALL BE BOUND BY ANY STATEMENT OR REPRESENTATION NOT CONTAINED IN THIS AGREEMENT. NO CHANGE IN THIS AGREEMENT IS EFFECTIVE UNLESS WRITTEN AND SIGNED BY PROPERLY AUTHORIZED REPRESENTATIVES OF EACH PARTY. BY USING THIS PRINTER, YOU AGREE TO ACCEPT THE TERMS AND CONDITIONS OF THIS AGREEMENT.

Communication Notices

Federal Communications Commission (FCC) Statement: This equipment has been tested and found to comply with the limits for a Class A digital device, pursuant to Part 15 of the FCC Rules. These limits are designed to provided reasonable protection against harmful interference when the equipment is operated in a commercial environment. This equipment generates, uses, and can radiate radio frequency energy and, if not installed and used in accordance with the instruction manual, may cause harmful interference to radio communications. Operation of this equipment in a residential area is likely to cause harmful interference, in which case the user will be required to correct the interference at his own expense.

Properly shielded and grounded cables and connectors must be used in order to meet FCC emission limits. Printronix is not responsible for any radio or television interference caused by using other than recommended cables and connectors or by any unauthorized changes or modifications to this equipment. Unauthorized changes or modifications could void the user's authority to operate the equipment.

This device complies with Part 15 of the FCC Rules. Operation is subject to the following two conditions: (1) this device may not cause harmful interference, and (2) this device must accept any interference received, including interference that may cause undesired operation.

Canadian Department of Communications Compliance Statement: This Class A digital apparatus complies with Canadian ICES-003.

Avis de conformite aux normes du ministere des Communcations du Canada: Cet appareil numerique de la classe A est conform á norme NMB-003 du Canada.

European Community (EC) Conformity Statement: This product is in conformity with the protection requirements of EC Council Directive 89/336/EEC on the approximation of the laws of the Member States relating to electromagnetic compatibility. Printronix cannot accept responsibility for any failure to satisfy the protection requirements resulting from a non-recommended modification of the product, including the fitting of non-Printronix option cards.

German Conformity Statement: Zulassungsbescheinigung Gesetz über die elektromagnetische Verträglichkeit von Geraten (EMVG) vom 30. August 1995

Dieses Gerät ist berechtigt in Übereinstimmung mit dem deutschen das EG-Konformitätszelchen - CE - zu führen.

Der Außteller der Konformitätserklärung ist die Printronix......(1)

Informationen in Hinsicht EMVG Paragraph 3 Abs. (2) 2:

Das Gerät erfüllt die Schutzanforderungen nach EN 50082-1 und EN 55022 Klasse A.

EN 55022 Klasse A Geräte bedürfen folgender Hinweise:

Nach dem EMVG: “Geräte dürfen an Orten, für die sie nicht asreichend entstört sind, nur mit besonderer Genehmigung des Bundesminesters für Post und Telekommunikation oder des Bundesamtes für Post und Telekommunikation betrieben werden. Die Genehmigung wird erteilt, wenn keine elektromagnetischen Störungen zu erwarten sind.” (Auszug aus dem EMVG, Paragraph 3, Abs. 4) Dieses Genehmigungsverfahren ist nach Paragraph 9 EMVG in Verbindung mit der entsprechenden Kostenverordnung (Amtsblatt 14/93) kostenpflichtig.

Nach der EN 55022: “Dies ist eine Einrichtung der Klasse A. Diese Einrichtung kann im Wohnbereich Funkstörungen verursachen; in diesem Fall kann vom Betreiber verlangt werden, angemessene Maßnahmen durchzuführen und dafür aufzkommen.”

Anmerkung: Um die Einhaltung des EMVG sicherzustellen sind die Geräte, wie in den Handbüchern angegeben, zu installieren und zu betreiben.

This product has been tested and found to comply with the limits for Class A Information Technology Equipment according to European Standard EN 55022. The limits for Class A equipment were derived for commercial and industrial environments to provide reasonable protection against interference with licensed communication equipment.

Warning

This is a Class A product. In a domestic environment this product may cause radio interference in which case the user may be required to take adequate measures.

警告使用者:
這是甲類的資訊產品，在居住的環境中使用時，可
能會造成射頻干擾，在這種情況下，使用者會被要
求採取某些適當的對策。

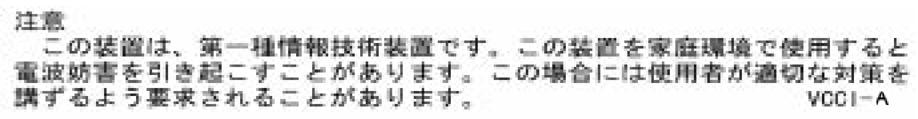

注意
　この装置は、第一種情報技術装置です。この装置を家庭環境で使用すると
電波妨害を引き起こすことがあります。この場合には使用者が適切な対策を
講ずるよう要求されることがあります。　　　　　　　　　　　VCCI−A

Trademark Acknowledgements

Centronics is a registered trademark of Genicom Corporation.

CSA is a registered certification mark of The Canadian Standards Association.

Dataproducts is a registered trademark of Dataproducts Corporation.

DuraFusion, IGP, LinePrinter Plus, LaserLine, PSA, PGL, and Printronix are registered trademarks of Printronix, Inc.

EIA is a registered service mark of the Electronic Industries Association.

Epson is a registered trademark of Seiko Epson Corporation.

Ethernet is a trademark of Xerox Corporation.

Hitachi is a registered trademark of Kabushiki Kaisha Hitachi Seisakusho DBA Hitachi, Ltd.

IBM, OS/2, and Proprinter are registered trademarks, PC-DOS and IPDS are trademarks of International Business Machines Corporation.

MS-DOS and Windows are registered trademarks of Microsoft Corporation.

PhoenixPage PCL 5 is a registered trademark of Phoenix Technologies LTD.

SELFOC is a registered trademark of Nippon Sheet Glass Co., Ltd.

3M is a registered trademark of the Minnesota Mining and Manufacturing Company.

Toray is a registered trademark, and Toraysee is a trademark of Toray Industries, Inc.

UL is a registered certification mark of Underwriters Laboratories Inc.

This product uses Intellifont Scalable typefaces and Intellifont technology. Intellifont is a registered trademark of Agfa Division, Miles Incorporated (Agfa).

CG, Garth Graphic, Intellifont, and Type Director are registered trademarks, and Shannon and CG Triumvirate are trademarks of Agfa Division, Miles Incorporated (Agfa). CG Bodoni, CG Century Schoolbook, CG Goudy Old Style, CG Melliza, Microstyle, CG Omega, and CG Palacio are products of Agfa Corporation. CG Times, based on Times New Roman under license from The Monotype Corporation Plc is a product of Agfa.

Univers is a registered trademark of Linotype AG and/or its subsidiaries.

Letraset is a registered trademark, and Aachen, Revue and University Roman are trademarks of Esselte Pendaflex Corporation.

Futura is a registered trademark of Fundición Tipográfica Neufville, S.A.

ITC Avant Garde Gothic, ITC Benguiat, ITC Bookman, ITC Century, ITC Cheltenham, ITC Clearface, ITC Galliard, ITC Korinna, ITC Lubalin Graph, ITC Souvenir, ITC Tiepolo, ITC Zapf Chancery, and ITC Zapf Dingbats are registered trademarks of International Typeface Corporation.

Albertus, Gill Sans, and Times New Roman are registered trademarks, and Monotype Baskerville is a trademark of The Monotype Corporation Plc, registered in the U.S. Pat. and TM office and elsewhere.

Hiroshige and Marigold are trademarks of AlphaOmega Typography, Inc.

Printronix, Inc. makes no representations or warranties of any kind regarding this material, including, but not limited to, implied warranties of merchantability and fitness for a particular purpose. Printronix, Inc. shall not be held responsible for errors contained herein or any omissions from this material or for any damages, whether direct, indirect, incidental or consequential, in connection with the furnishing, distribution, performance or use of this material. The information in this manual is subject to change without notice.

This document contains proprietary information protected by copyright. No part of this document may be reproduced, copied, translated or incorporated in any other material in any form or by any means, whether manual, graphic, electronic, mechanical or otherwise, without the prior written consent of Printronix, Inc.

Copyright © 2000, Printronix, Inc. All rights reserved.

Table of Contents

1 Introduction 17
About This Manual 17
General Safety Precautions 18
Safety Label And Component Locations 20
About The Printer 25
    Features 25
    Emulations 25
    Fonts And Forms 26
2 Operation 27
Installation Overview 27
Loading Paper 28
    Loading Fanfold Paper 28
    Loading Cut Sheet Paper (Option) 31
    Changing Cassette Paper Size (Optional Procedure)...34
    Cut Sheet Tray Linking (Optional Procedure) 35
    Custom Tray Width (Optional Procedure) 36
    Custom Tray Length (Optional Procedure) 37
Powering On The Printer 38
    Printer Functions 38
Power Paper Stacker (Option) 39
Physical Description 40
Stacker Operation Keys 41
Setting The Stacker Page Length 42
Removing Paper 43
Stacker Full 44
Using The Control Panel 45
    Liquid Crystal Display (LCD) 45
    Function Keys 47

Table of Contents

3 Consumables Replacement....................51

Consumables Replacement 51
- Replacement Intervals 51
- Replacing The Toner Cartridge.....................................52
- Replacing The Waste Toner Bottle 57
- Replacing The Photoreceptor Drum..............................60
- Proper Disposal Of A Drum Unit 68
- Replacing The Developer..69
- Developing Unit Removal..70
- Removing Old Developer 70
- Adding New Developer 72
- Replacing The Developing Unit.....................................73
- Developing Unit Removal..73
- Developing Unit Installation..75

4 Scheduled Maintenance 77

Maintaining Print Quality..77

Maintenance Tools 78
- Service Level Page Counts...79
- Clearing Service Level Messages.................................80

Maintenance Schedules 81
- User Cleaning Schedule 81

General Cleaning...95
- Vacuuming The Printer 95
- Cleaning The Chargers...104
- Main Charger 104
- Precharger and Transfer/Separator Charger 108
- Cleaning The Fuser Unit Cover Glass 110
- Cleaning The Cut Sheet Option Rollers......................115
- Pickup Rollers 115
- Reverse Rollers..118

Major Cleaning 121
- Cleaning Unit 121

Discharge LED 123
Photoreceptor Drum..124
Cleaning The Developing Area 126

5 Troubleshooting 129

Troubleshooting...129
Diagnostics..129
Offline Diagnostics 129
Online Diagnostics 130
Fanfold Paper Jams 130
Paper Jam Near The Tractor 130
Paper Jam Near The Paper Output Section 132
Cut Sheet Paper Jams 138
Paper Jam At The Back Of The Paper Cassette 138
Paper Jam In The Transport Input Section 140
Paper Jam In The Transport Output Section 144
Paper Jam In The Face Up Or Down Paper Path.......145
System Status and Error Messages 146
Reprinting Pages After Fault Condition.......................146
Error Messages...151

A Maintenance Log Sheets..................... 159

Maintenance Log Sheets...159

B Specifications 163

Paper Specifications..163
Performance Characteristics 166
Host Interfaces..167
Emulations 168
Memory Requirements 168
Safety Regulations..168
Electromagnetic Interference 168
Physical Characteristics and Environment 169

1 Introduction

About This Manual

This manual explains how to use your printer.

Safety Notices And Special Information

For your safety and to protect valuable equipment, it is very important that you read and comply with all information highlighted under the following special headings:

WARNING **A warning notice calls attention to a condition that could harm you.**

WARNUNG

Ein Warhinweis dieser Art weist auf Verletzungsgefahr hin.

AVISO

Las notas de adviso llaman la atención sobre una condición que puede causar lesiones.

ATTENTION

Attire votre attention sur une opération pouvant présenter un danger.

AVVERTENZA

Un’indicazione di avvertenza segnala una condizione di pericolo suscttibile causare lesioni all’operatore.

CAUTION **A caution notice calls attention to a condition that could damage the printer.**

IMPORTANT **An important notice provides information that is vital to proper operation of the printer.**

NOTE: A note provides information and helpful tips about printer operation.

Keys And Display Messages

Keys and indicators that are labeled on the printer are printed in uppercase letters. For example:

Press ENTER to select the value shown on the LCD.

Messages that appear on the control panel message display (called the Liquid Crystal Display, or LCD), are printed in uppercase letters and enclosed in quotation marks. For example:

“ENTER SWITCH LOCKED” appears on the LCD.

General Safety Precautions

Observe the following precautions at all times to ensure safe operation of the printer.

Read all instructions and save them for future use.

Follow all safety notices and instructions printed in this manual and marked on the printer.

The operator-accessible power switch does not shut off all power to the printer. You must unplug the power cord to shut off all power to the printer.

The printer relies on protective devices in the building installation for protection. The printer must be connected to a 30 Amp, 250 V outlet.

Do not operate the printer in a room which is not properly ventilated. It is recommended that the room be at least 1,000 cubic feet with one air exchange every two hours.

Remove packaging materials carefully and save for possible future use. If the printer is powered on without removing all internal tape and packing, the printer may be damaged.

Keep combustible materials away from the printer. Dispose of used toner properly, as it is flammable.

Keep away from components in the printer that are potentially hazardous or easily damaged. For example, the fuser unit becomes very hot under normal operating conditions, and several components use high voltage.

Do not block or obstruct any cabinet ventilation slots.

Never spill liquid on the printer. Use only approved cleaning agents and methods.

Put nothing on the power cord. Do not locate the power cord where people will walk on it. Do not place the power cord under any carpet.

Do not lean on or put heavy objects on top of the printer.

Do not put your hand into the power paper stacker when the printer is in operation.

Turn off the power immediately if the printer emits an unusual noise or smell.

Do not look directly at the flash lamp light.

Safety Label And Component Locations

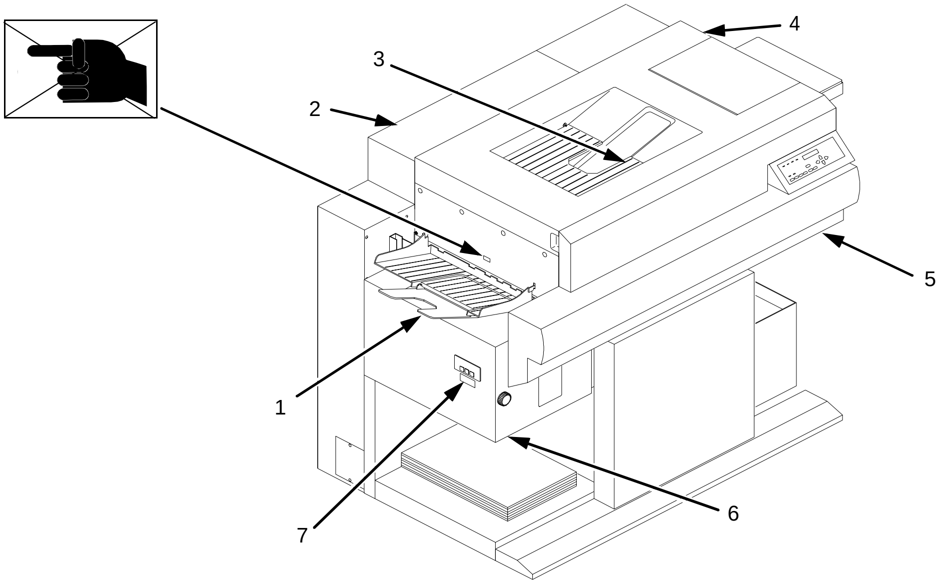

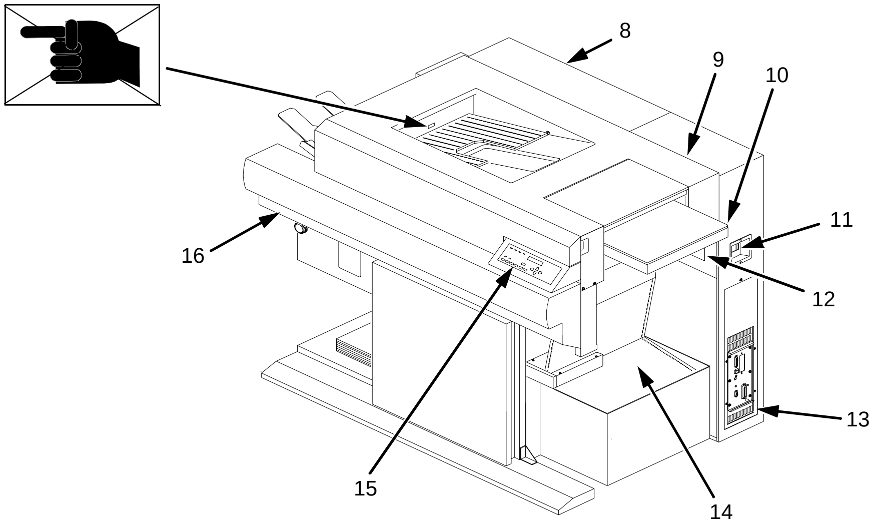
8
9
10
11
16
12
13
15
14

Legend:

1) Face Up Paper Output Tray
2) Rear Cover
3) Face Down Paper Output Tray
4) Top Cover
5) Front Upper Cover
6) Power Paper Stacker (Optional)
7) CAUTION
8) Rear Cover
9) Top Cover
10) Cut Sheet Paper Input Cassette (Optional)
11) Power Switch
12) CAUTION
13) Host I/O Connections
14) Fanfold Paper
15) Control Panel
16) Front Upper Cover

Figure 1: Safety Labels and Components

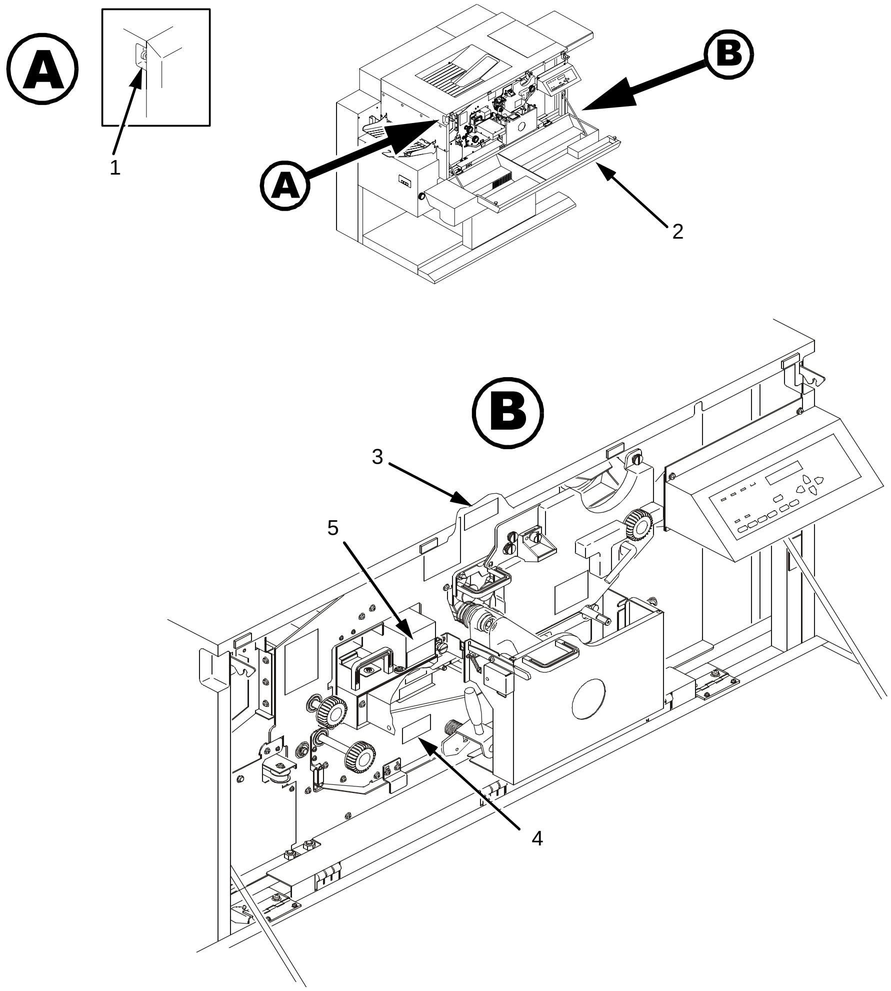

Legend:

1) Open/Close Button
2) Front Upper Cover
3) CAUTION
4) CAUTION
5) WARNING

Figure 2: Front View with Front Upper Cover Open

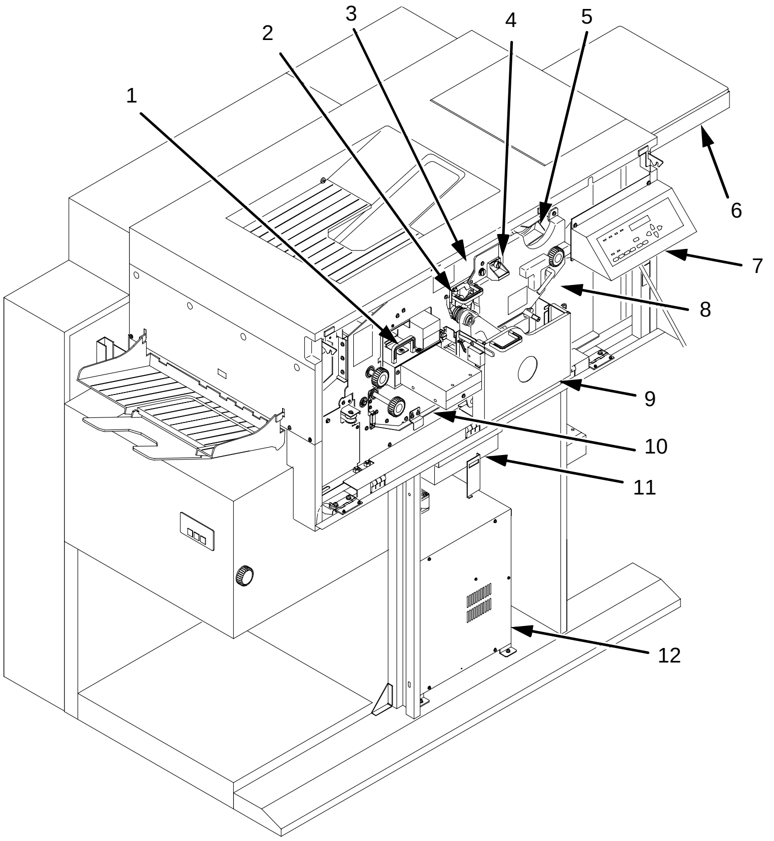

Legend:

1) Fuser Unit
2) Cleaning Unit
3) Discharge LED (not visible)
4) Main Charger
5) Toner Cartridge
6) Optional Cut Sheet Paper Input Cassette
7) Control Panel
8) Developing Unit
9) Waste Toner Recovery Unit
10) Transport Unit
11) Smoke Filter Box
12) Power Supply for Flash Lamp

Figure 3. Front View with Front Upper Cover Removed

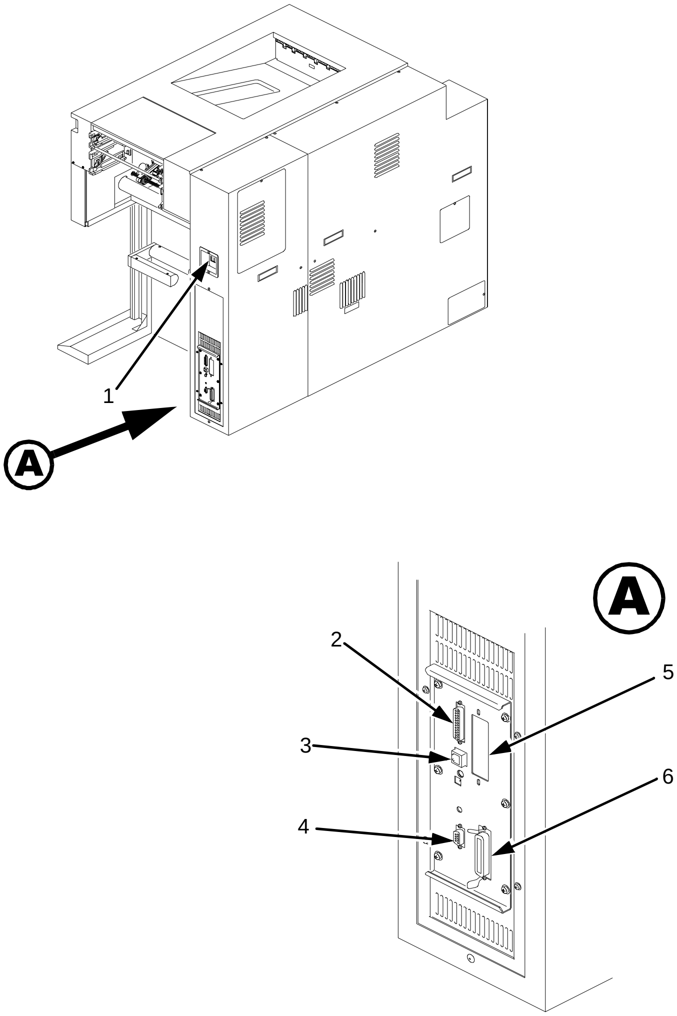

Legend:

1) Power Switch
2) Serial Port
3) Diagnostic Port
4) General Purpose I/O Port
5) Optional Coax/Twinax Port
6) Parallel Port/Optional Ethernet Port

Figure 4: Rear Cover

About The Printer

Features

Printing speed is 35 pages per minute on continuous letter size and A4 size fanfold forms (long edge fed). In the optional cut sheet mode, printing speed is 27 pages per minute on letter size and A4 size cut sheet forms (long edge fed). The printer produces printed output with a 300 x 300, (or optionally) 240 x 240 or 400 x 400 dots-per-inch (dpi) resolution in either the continuous form or cut sheet printing mode. See Appendix B for printer specifications.

Features include the following:

- Continuous fanfold paper and optional cut sheet forms handling
- User-replaceable toner cartridge
- DuraFusion® flash fusion technology
- Liquid crystal display that provides operating and error messages
- Flash memory which stores emulations
- Non Volatile memory which stores preset configurations
- Serial and parallel interfaces
- Ethernet™ network adaptor (optional)
- Coax/Twinax interfaces (optional)
- Power stacker (optional)

Emulations

Your printer comes equipped with the Printronix® LinePrinter Plus® emulation software (which emulates an impact printer). Printronix LinePrinter Plus includes the following printer protocols:

- P-Series
- P-Series XQ
- Serial Matrix

- Proprinter® III XL
- Epson® FX-1050

Printronix LinePrinter Plus provides portrait and landscape image orientation. Automatic 1-up, 2-up, 4-up, and gray bar overprinting are also provided. The emulation also offers optional proportional (scalable) fonts.

The following optional emulations are also available:

- IGP®/PGL®
- IGP/VGL
- PCL5®
- IPDS™

For specific information on each emulation, see the appropriate emulation manual.

Fonts And Forms

The printer provides a variety of resident fonts. The emulation you are using determines what resident fonts are available. For example, the LinePrinter Plus emulation provides CG Times, Letter Gothic, Courier, OCR-A, and OCR-B as standard sets of fonts.

With either the LinePrinter Plus or PCL 5 emulations, you can load additional fonts into printer memory from the host computer. The additional fonts can be loaded into the printer memory using the download procedure or using host commands. The additional fonts can be loaded into RAM or Flash memory. If the additional fonts are loaded into RAM, they will be lost when the printer is reset or powered off. Additional fonts are accessed by host commands.

You can store forms together with fonts. The storage space for forms and fonts depends upon the amount of printer memory and/ or non-volatile Flash memory space available. You can manipulate different fonts and/or forms depending upon the emulation installed.

2 Operation

Installation Overview

The installation and setup of your printer is intended to be done by a service provider who has been trained and authorized by Printronix. Your service provider is also responsible for doing a preinstallation site survey, unpacking the printer, connecting the power and host data cables, and installing the first set of consumable items in the printer. Depending on the terms of your service contract, your service provider might also power on your printer and configure it. As the owner of the printer, it is your responsibility to provide adequate ventilation and power for the printer.

Loading Paper

The following section explains how to load fanfold paper. To load cut sheet paper, go to page 31.

Loading Fanfold Paper

IMPORTANT **When loading fanfold paper, be sure the leading edge of the paper has a clean, separated perforation (without ragged edges or paper chaff).**

NOTE: If you leave the printer on and replace paper, it will resume printing where it left off when you put it online.

To load fanfold paper, perform the following steps. Repeat this procedure whenever top-of-form must be reset (e.g., after clearing a paper jam, loading new paper, etc.). For details on clearing paper jams, refer to Chapter 5, “Troubleshooting."

1. If your printer has the optional power paper stacker installed, set the stacker page length adjustment on the side of the power stacker to match the paper length to be used.
2. Place the fanfold paper box under the tractor unit.

3. Pass the leading edge of the paper between the lower paper guides, as shown in the illustration below.

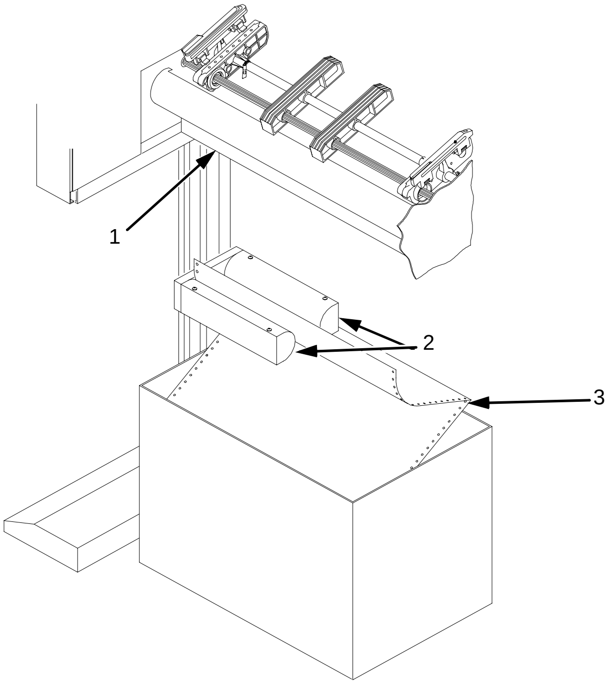

Legend:

1) Tractor Unit
2) Lower Paper Guides
3) First paper fold is toward printer.

IMPORTANT **To prevent jams, place the first fold of the paper facing toward the printer as shown.**

4. Unlock only the right tractor by pushing forward on the tractor lock.
5. Open the left and right tractor gates and place the paper about half-way onto the tractor pins.

IMPORTANT **Do not push the paper past the tractors into the area of the paper jam sensor.**

6. Close the left tractor gate.

7. Move the right tractor to the left or right until its pins line up with the holes in the right edge of the paper, then close the right tractor gate.

NOTE: When you place the paper on the tractors, you should introduce a slight amount of side-to-side tension into the paper. The right tractor must be set far enough to the right so that there are no wrinkles, looseness, etc. in the paper. Be careful not to set the right tractor too far to the right, however, as too much tension may cause the paper holes to tear away from the tractor pins.

8. Lock the right tractor with the tractor lock.

9. If you are reloading paper following a “FAN-FOLD PAPER EMPTY” message with the printer power on, press ONLINE to place the printer online. The printer automatically sets the physical top of form at the leading edge of the paper and resumes printing.

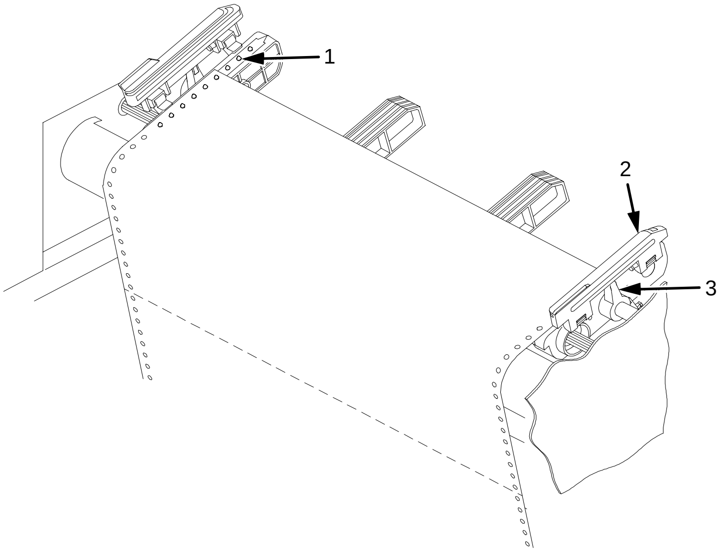

Legend:

1) Tractor Pins
2) Tractor Gate
3) Tractor Lock

Loading Cut Sheet Paper (Option)

If your printer is equipped with the cut sheet paper feed option, then upper and lower paper input cassettes are provided. When printing on cut sheet paper, you can select either of two paper output trays: the face down tray (default) or the face up tray.

To change the paper output tray selection, see the Cut Sheet Output option on the Paper Control menu. Refer to the *User's Manual* for details.

NOTE: If the printer runs out of paper during printing, you do not need to turn off power to the printer to replace paper. If power is maintained to the printer, when you replace the paper and place the printer online, it will resume printing automatically where it left off.

To load cut sheet paper, perform the following steps:

1. Pull out the desired paper cassette and remove its cover.

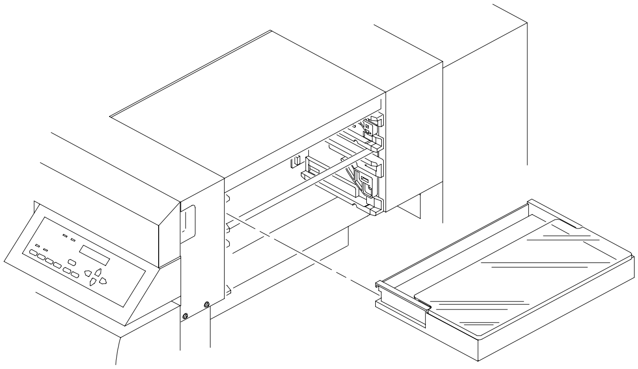

2. Load the new paper uniformly in the cassette, making sure the leading edge of the paper is at the front of the cassette. Do not load more paper than specified below, otherwise a paper jam may occur.

17-20 lb. bond	Upper cassette	250 sheets or less
	Lower cassette	500 sheets or less
21-44 lb. bond	Upper cassette	1 inch or less in thickness
	Lower cassette	2 inches or less in thickness

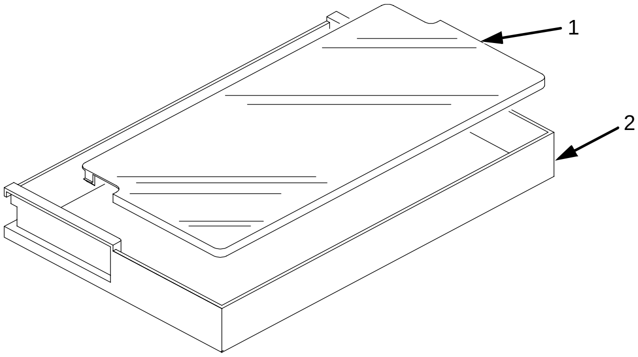

Legend:

1) Cassette Cover
2) Cassette

3. Cover the cassette and insert it fully into the printer, making sure it is completely seated. If the cassette is not fully seated, a paper jam may result.

4. If you are reloading paper following a “CUT-SHEET PAPER EMPTY“ message with the printer power on, press ONLINE to place the printer online. The printer resumes printing.

NOTE: Occasionally, paper may become moist and wavy, resulting in poor print quality. If this occurs, remove the wavy sheets of paper from the cassette and replace them with those from a new package.

In order to minimize the possibility of a paper jam:

- Only use xerographic quality paper.
- Load paper in a cassette which has been adjusted for the exact paper size. (To set the cassette for the paper size, see page 34.)
- Do not gather loose paper for use.
- Do not use wrinkled, folded, or moist paper.
- Do not leave paper in the cassettes overnight.
- Always store unused paper in a clean, dry area protected from sunlight.
- If a paper package is opened but not fully used, rewrap and seal the package and store it properly for future use.

Changing Cassette Paper Size (Optional Procedure)

The cut sheet option comes with four cassettes (paper trays) preconfigured for either U.S. or Metric paper sizes. Should the configurations of these cassettes not meet your needs, you can reconfigure the cassettes as described below, or you can purchase additional cassettes.

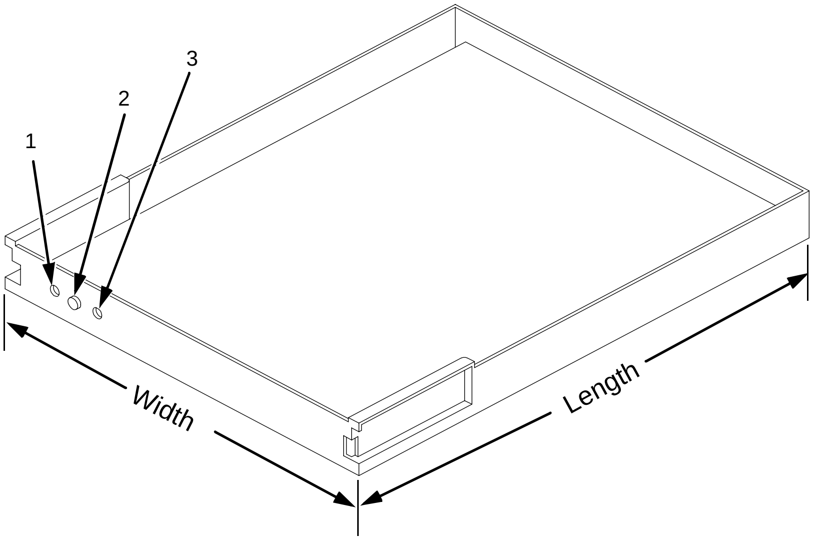

IPS 10, 11, and 12 = Upper level paper size detector sensors
IPS 20, 21, and 22 = Lower level paper size detector sensors

Legend:

1) IPS (Paper Size Insert) 12/22
2) IPS 11/21
3) IPS 10/20

There are three holes in the forward end of the cut sheet paper feed cassettes. Plastic inserts are to be set in these holes according to the size of the cut sheet paper loaded in the cassette (as shown in the table that follows).

When the plastic inserts in the cassette contact the paper size sensors on the printer, the printer determines that the paper cassette is in position and identifies the paper size.

The following table lists the available standard settings for the cut sheet paper feed cassette (O = plastic insert; --- = no insert):

Paper size	IPS 12/22	IPS 11/21	IPS 10/20
Legal	---	O	O
Ledger	O	O	---
A3	O	---	O
B4	O	---	---
Letter	---	O	---
A4	---	---	O
Custom Size (variable width - 7.0 - 12.0 inches) (variable length - 8.3 - 19.6 inches)	O	O	O

Cut Sheet Tray Linking (Optional Procedure)

If your printer is equipped with the cut sheet paper feed option, you can use Tray Linking. Tray Linking is disabled by default. With Tray Linking enabled, when the active cut sheet paper tray runs out of paper, the printer will automatically switch to the other paper tray and continue printing.

To enable or disable this feature, see the Tray Linking option on the Paper Control menu. Refer to the *User's Manual* for details.

NOTE: We recommend that you disable Tray Linking if the two cut sheet paper trays are of different sizes.

If the cut sheet trays are of different sizes, and Tray Linking is enabled, the printer will not switch to the alternate tray when the first tray runs out of paper, nor will it display the usual “CUT-SHEET PAPER EMPTY” message on the LCD. Instead, the printer stops printing and displays the message “TRAY MISMATCH.”

To clear this message, either add paper to the active tray, or insert a matching tray in the alternate tray position. Then, press CLEAR on the control panel.

Custom Tray Width (Optional Procedure)

If your printer is equipped with the cut sheet paper feed option, it is possible to override the standard cut sheet paper tray widths. This feature is called Custom Tray Width. The standard cut sheet paper tray sizes are listed in the table on page 35. Using Custom Tray Width and specially-modified paper trays, it is possible to use nonstandard paper stock that is wider or narrower than the standard paper widths. You can use nonstandard width paper either in the upper tray, in the lower tray, or in both trays.

If you are using the Custom Tray Width feature, you should adjust the width of the image in the printer to match your nonstandard width paper.

To set a custom tray width, see the Cust. Tray Width option on the Paper Control menu. Refer to the *User’s Manual* for details.

NOTE: The Custom Tray Width feature requires specially-modified paper trays.

Custom Tray Length (Optional Procedure)

If your printer is equipped with the cut sheet paper feed option, it is possible to override the standard cut sheet paper tray lengths. This feature is called Custom Tray Length. The standard cut sheet paper tray sizes are listed in the table on page 35. Using Custom Tray Length and specially modified paper trays, it is possible to use nonstandard paper stock that is longer or shorter than the standard paper length. You can use nonstandard length paper only in the lower tray.

If you are using the Custom Tray Length feature, use the control panel to adjust the length of the image in the printer to match your nonstandard length paper from the front panel.

To set a custom tray length, see Cut Sheet Options on the Paper Control menu.

NOTE: The Custom Tray Length feature requires specially modified paper trays.

Variable Length feature is enabled when the Variable Tray Length is enabled, but the values are resumed after the lower tray has been reconfigured to standard paper size.

Paper selection has to be set to the lower tray with a custom tray inserted in order to make the variable tray length available through the control panel.

Powering On The Printer

Printer Functions

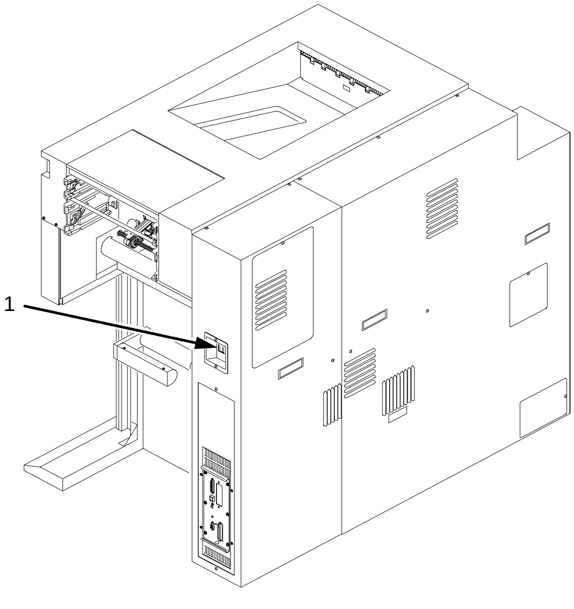

Legend:

1) Power Switch

CAUTION **The printer must be connected to the proper power source: 200, 220, or 240 VAC and 50-60 Hz, as shown on the rear panel label. The DC power supply must be set for the proper line voltage. Using an incorrect power source or improperly setting the DC power supply will damage the printer.**

1. Make sure the printer is plugged into the appropriate power source, the interface cable is connected, and the host computer is on.
2. Turn on the printer by setting the power switch to **|** (on).

3. Note that when you power on the printer, the following occur:
    a. The printer reads the emulation and displays the message:

       “TESTING HARDWARE

       PLEASE WAIT...”
    b. If there are no bootup errors, the LCD displays “DIAGNOSTICS PASSED”
    c. The STAND BY Light flashes.

Power Paper Stacker (Option)

Safety Feature

To prevent injuries, the optional power stacker is equipped with two safety stop bars located under the edge of the stacker (see following illustration). When the safety bars are pressed, stacker operation stops immediately. When the AUTO key is pressed, the stacker resumes operation.

Physical Description

The front (output side) of the power stacker is shown in the following illustration.

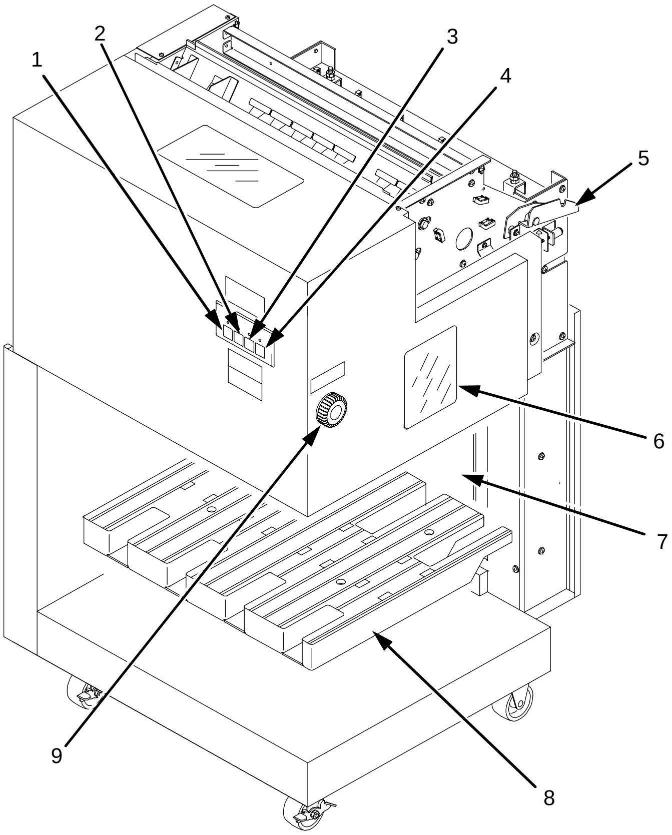

Legend:

1) AUTO Key
2) STOP Key
3) DOWN Key
4) HEAVY Key
5) Hook
6) Head/Tail Length Measuring Gauge (in inches)
7) Safety Stop Bar (not visible in figure)
8) Elevator Table
9) Top/Bottom Adjustment Knob

Stacker Operation Keys

The power paper stacker contains the following keys for operating the elevator:

- **AUTO**: Sets the elevator in automatic mode. Pressing this key causes the elevator table to rise until it reaches its maximum upper position and enables the stacker.
- **STOP**: Stops the elevator, and displays the message “STACKER NOT READY” on the printer control panel. The STOP key may be used to stop the elevator from lowering after pressing the DOWN key.
- **DOWN**: Lowers the elevator until it reaches its maximum lower position, or until the STOP key is pressed.
- **HEAVY**: ON equals “Heavy Mode” for thicker paper (LED is lit); OFF equals “Normal Mode” for thinner paper (LED is not lit). This key is only active in STOP mode and when there is no paper in the stacker.

  When operating the power stacker in Heavy Mode, the maximum stack height *following a cut or page eject* depends on the page length, as shown in the following table:

Page Length (inches)	Max. Stack Height (inches)
7.0	7.5
7.5	7.2
8.0	7.0
8.5	6.6
9.0	6.4
9.5	6.1
10.0	5.8
10.5	5.5

11.0	5.3
11.5	5.0
12.0	4.8

NOTE: Normal Mode supports up to 28 lb. bond (105 g/m^2). Heavy Mode must be used for media weights greater than 34 lb. bond (128 g/m^2). Some media that are 28 lb. bond (105 g/m^2) and higher require Heavy Mode for reliable stacking.

Setting The Stacker Page Length

Set the stacker page length to match the actual page length. On the side of the stacker, locate the adjustment knob and the window containing a measuring gauge (a pointer with a scale). Rotate the knob until the pointer matches the page length being used. See the illustration on page 40.

NOTE: If the printer page length does not match the stacker page length, the timing of the stacker swinger arm will be incorrect, resulting in a folding error.

Set the printer page length by following the instructions for changing printer configurations. Refer to the *User's Manual* for details.

Removing Paper

1. Upon completion of a print job, press the PAGE EJECT key on the printer control panel, and separate the paper at the perforation.
2. Press the DOWN key on the stacker to lower the elevator (stacking table).
3. Press the STOP key on the stacker when the elevator is about half-way down.

NOTE: The elevator stops automatically when it is fully loaded, without the STOP key being pressed.

4. Remove all paper (the completed print job) from the elevator, and do one of the following:
    - To change the paper mode, go to Step 5
    - To reload paper after a paper path error, go to Step 6
    - To resume operation, go to Step 7
5. If necessary, you may change the paper mode at this point, by pressing the HEAVY key. ON equals “Heavy Mode” for thicker paper (LED is lit); OFF equals “Normal Mode” for thinner paper (LED is not lit). This key is only active in STOP mode and when there is no paper in the stacker.
6. If the printer reports an error which requires the paper path to be cleared, be sure to reload the paper with the first perforation facing inward (see the illustration on page 29). Then press the CLEAR key on the control panel. Otherwise, the paper may jam and/or fold incorrectly.
7. Press the AUTO key on the stacker to automatically resume operation.

CAUTION **Always remove all paper from the elevator before pressing the AUTO key on the stacker. Failure to remove all paper may damage the stacker.**

Stacker Full

1. When the stacker becomes full, the printer automatically separates the paper at the perforation, returning the edge of the paper to home position on the tractors.
2. Press the DOWN key on the stacker.
3. Remove all paper from the stacker elevator.
4. Press the AUTO key on the stacker to resume operation.
5. Press the CLEAR key on the printer control panel, to clear the fault message and place the printer online.
6. Check paper input to the printer to insure the first paper perforation is facing the printer and reload paper, if necessary, to align the first paper perforation.
7. If the Reprint on Fault option is enabled in the Paper Control menu, the printer reprints the applicable pages. See the *User's Manual* for more detail.
8. Press the ONLINE key on the printer control panel, to place the printer online.

Using The Control Panel

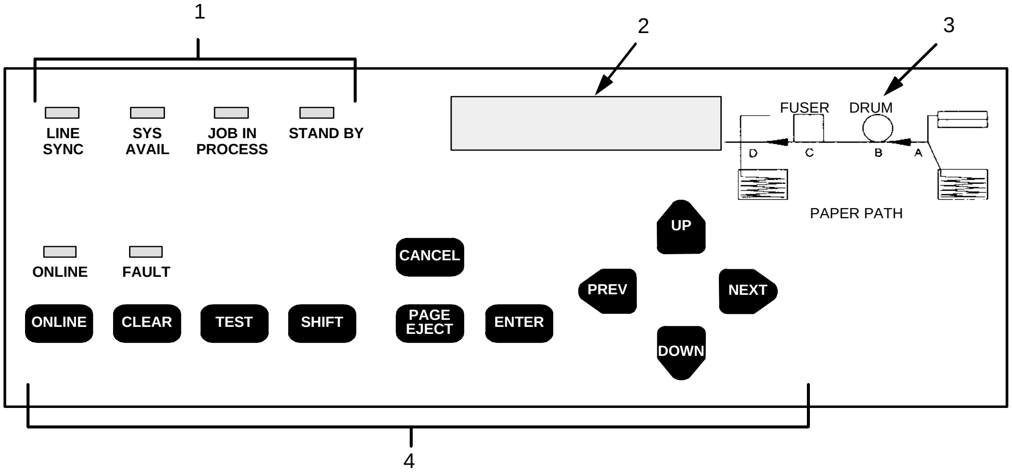
1
2
3
LINE SYNC
SYS AVAIL
JOB IN PROCESS
STAND BY
FUSER
DRUM
D
C
B
A
PAPER PATH
UP
CANCEL
ONLINE
FAULT
PREV
NEXT
ONLINE
CLEAR
TEST
SHIFT
PAGE EJECT
ENTER
DOWN
4

1) Status Indicators
2) Liquid Crystal Display (LCD)
3) Paper Path Diagram
4) Function Keys

Figure 5. Control Panel

The control panel is located on the top right side of the front cover.

Liquid Crystal Display (LCD)

The liquid crystal display (LCD) displays messages, printer operating status, configuration options, and error codes.

Status Indicators

The status indicators display the current operational status of the printer.

LINE SYNC

Twinax interface only. Indicates there is activity on the line from the host computer.

SYS AVAIL

Twinax interface only. Indicates there is activity to the current address on the line.

JOB IN PROCESS

When the printer is receiving data or processing data, JOB IN PROCESS flashes. If data has been processed and is waiting to be printed, or has been printed but not yet fused and ejected by the printer, JOB IN PROCESS lights continuously.

JOB IN PROCESS does not light when the printer is not processing data, no data exists in the buffer, and the printer is not receiving data.

STAND BY

STAND BY flashes while the printer is executing any control panel command, and while the printer is unavailable for printing due to its normal system activities, such as booting, printing its configuration, writing status information, and loading applications.

IMPORTANT **Do not press any control panel key when STAND BY is flashing. The printer may carry out unwanted commands.**

ONLINE

ONLINE is lit continuously when the printer is online (when the printer is ready to print and accept data from the host). It flashes when the printer is offline or when the printer stops because of an error.

FAULT

FAULT flashes when the printer is unavailable for printing because of an internal error.

Function Keys

The pressure-sensitive function keys are located directly below the status indicators. When pressing the keys, a “beep” verifies contact.

The function keys permit you to configure the options of the printer. You can access these options via a structured menu which is displayed on the LCD. To navigate through the options, use the UP, DOWN, NEXT, and PREV keys. Press ENTER to select an option that appears on the LCD.

The purpose of each function key (under normal printing mode) is defined below.

For specific procedures and information regarding the configuration menu, see page 41.

NOTE: You can enable or disable the panel key sound via the configuration menu.

ONLINE Key

The ONLINE key toggles the printer online and offline.

- To place the printer online, press ONLINE until the ONLINE status indicator remains continuously lit. The LCD displays “ONLINE,” along with the name of the current emulation. The printer can now receive and process data and print.
- To place the printer offline, press ONLINE until the ONLINE status indicator blinks. The LCD displays “OFFLINE.” The printer stops processing and printing any new data, except for any pages in process.
- To start downloading printer operating system files to the printer, hold down the ONLINE + CLEAR keys while cycling printer power. See Chapter 3 for more information.

NOTE: When the printer is not in an error state, pressing ONLINE in any level of the configuration menu causes the printer to accept any configuration changes you have entered and return to online status. When the printer is in an error state, pressing ONLINE in any level of the configuration menu causes the printer to re-display the fault message.

CLEAR Key

- In the fault state, press the CLEAR key to clear errors and reset the printer to the offline state (if all errors are cleared).
- To start downloading printer operating system files to the printer, hold down the ONLINE + CLEAR keys while cycling printer power. See Chapter 3 for more information.

TEST Key

When the printer is offline, you can run a test print, as configured under the Test Print menu (page 96), by pressing the TEST key. To stop the test print, press TEST again.

Pressing TEST when the printer is online has no effect.

SHIFT Key

This key does not have a function of its own. It is combined with other keys to modify their functions.

PAGE EJECT Key

The PAGE EJECT key performs the following functions when the printer is online:

When the JOB IN PROCESS status indicator lights steadily, pressing PAGE EJECT causes the printer to print all data in the printer. The page is then cut at the perforation (unless the Burst On Eject option is disabled).

When the JOB IN PROCESS status indicator flashes, pressing PAGE EJECT causes the printer to attempt to print any data in the buffer. The paper motion caused by the page eject operation may interrupt the printing of data that is not currently in the buffer.

Once the paper motion has occurred, the data that was not yet in the buffer should print. The page is then cut at the perforation (unless the Burst On Eject option is disabled).

To start downloading files to the printer, power off, then press the PAGE EJECT + ONLINE key and hold them down while powering on the printer. (See “Downloading Files Into Flash Memory” section in Chapter 3.)

IMPORTANT **Do not press PAGE EJECT while JOB IN PROCESS is flashing, or your print job might become misaligned.**

When the JOB IN PROCESS status indicator is not lit or flashing, PAGE EJECT has no effect.

Pressing the SHIFT + PAGE EJECT keys together moves the paper one page length without printing or cutting the paper. It can be used to feed the paper into (customer-supplied) postprocessing equipment.

ENTER Key

When you are entering parameters in the configuration menu, press ENTER to select the value shown in the LCD. The printer confirms your selection by placing an asterisk (*) next to the value in the display. However, if the ENTER key is locked, “ENTER SWITCH LOCKED” appears and the value is not accepted.

CANCEL Key

The CANCEL key performs the following functions when the printer is offline:

- Cancels the current page in process
- Cancels any pages queued to print but not yet printed
- Cancels any input data not yet processed
- Clears the reprint buffers
- Cancels a download if one is in process

UP And DOWN Keys

The UP and DOWN keys are used for the configuration menu:

- To unlock or lock the ENTER key, press UP + DOWN at the same time when the printer is offline
- The ENTER key lock can be configured to be a key combination other than UP + DOWN. Refer to the “Unlocking And Locking The Configuration Menu” section in Chapter 3 for more information
- To enter the configuration menu, press DOWN when the printer is offline
- To move between the different levels in the configuration menu, press either UP or DOWN as needed

NEXT And PREV Keys

The NEXT and PREV keys are used to move between the parameter options on the current level of the configuration menu. Press NEXT or PREV to move forward or backward through parameter options.

3

Consumables Replacement

Consumables Replacement

For the best print quality, the printer consumables should be replaced at the intervals specified in the following table. The yield of the supplies is based on a 4% coverage of letter size (8.5 inch x 11 inch) paper. However, the yield may vary according to your print applications, environmental conditions, and toner density setting

Replacement Intervals

Consumable Item	Part Number	Replacement Interval (in Pages)[1]
Toner Cartridge	703532-001	21,000
Waste Toner Bottle	703539-001	150,000
Photoreceptor Drum	703535-001	150 - 300,000 See Note 2
Developer	703548-001	150,000
Developing Unit	705739-001	600,000
Note 1: Will vary with paper size, media type, and toner coverage. Note 2: Replace at 300,000 pages or sooner if print quality is no longer acceptable. Drum life is dependent upon media used and proper maintenance and operation of the printer. Print media other than bond paper (e.g. labels, card stock, plastic, or vinyl) may reduce drum life by as much as 50%.		

Replacing The Toner Cartridge

NOTE: When replacing the toner cartridge, put the old cartridge on a disposable wrapper (e.g., paper towels, newspaper) to minimize toner spillage.

Vinyl gloves may be worn to prevent toner from contacting the skin. If necessary, use only cold water to remove toner from skin or clothing.

To replace the toner cartridge, perform the following steps:

1. Place the printer OFFLINE when paper motion stops, wait 15 seconds, then open the printer front upper cover.

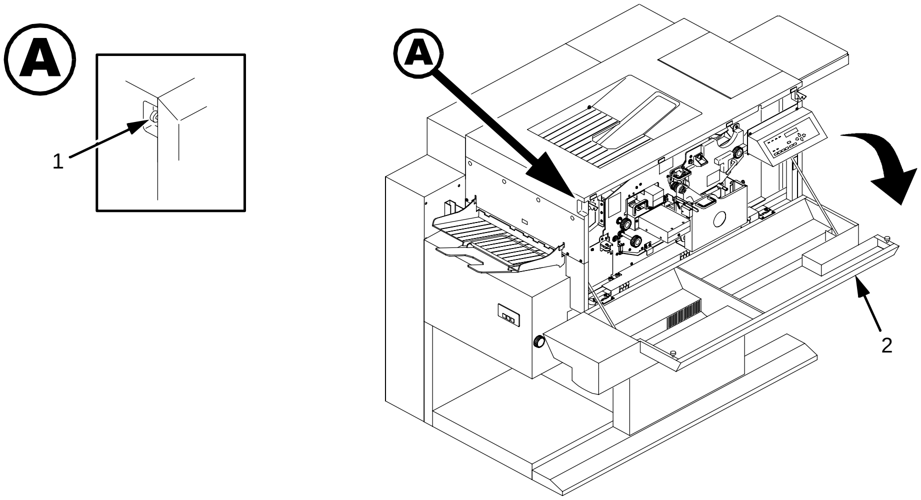

Legend:

1) Open/Close Button
2) Front Cover

2. Rotate the old toner cartridge counterclockwise until the notch is aligned with the pin in the toner hopper, and remove the cartridge.

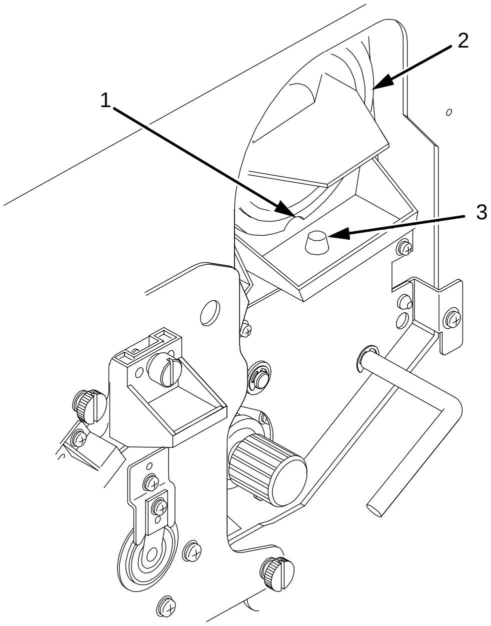

Legend:

1) Notch
2) Toner Cartridge
3) Positioning Pin

3. Put the old cartridge into a plastic bag and discard it.

4. Keep the new toner cartridge in its package. Hold it level and shake it back and forth three or four times as shown.

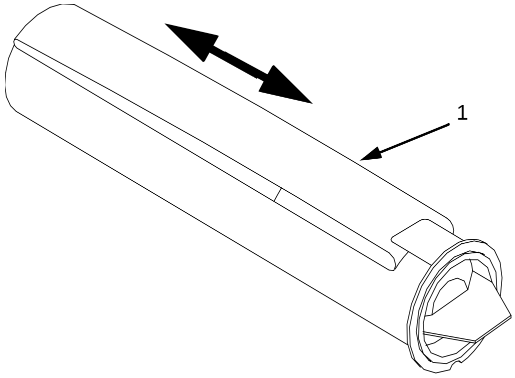

Legend:

1) Toner Cartridge

5. Remove the new toner cartridge from its package.

6. With the cover tape facing up, begin inserting the cartridge into the toner hopper, and slowly pull off the cover tape in the direction of the arrow. Remove the last of the tape just as the cartridge is completely inside the hopper.

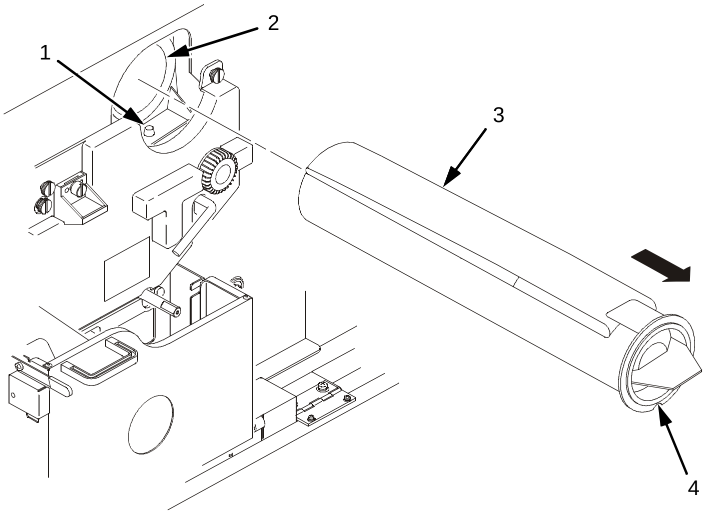

Legend:

1) Pin
2) Toner Hopper
3) Cover Tape
4) Notch

7. Fit the notch to the pin on the developing unit. Push the new toner cartridge as far as possible into the toner hopper.

8. Rotate the cartridge clockwise as far as it will turn.

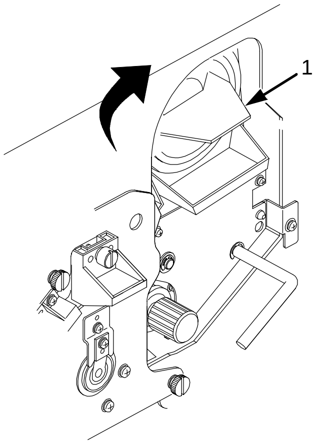

Legend:

1) Toner Cartridge

9. If any toner has spilled, remove it with wet tissue paper or a toner vacuum.
10. Close the front upper cover.

Replacing The Waste Toner Bottle

The waste toner recovery unit contains the waste toner bottle and is located behind the front cover, as shown below. When the “WASTE TONER FULL” message appears on the control panel, replace the waste toner bottle by performing the following steps, and discard the full bottle. Do not reuse the bottle.

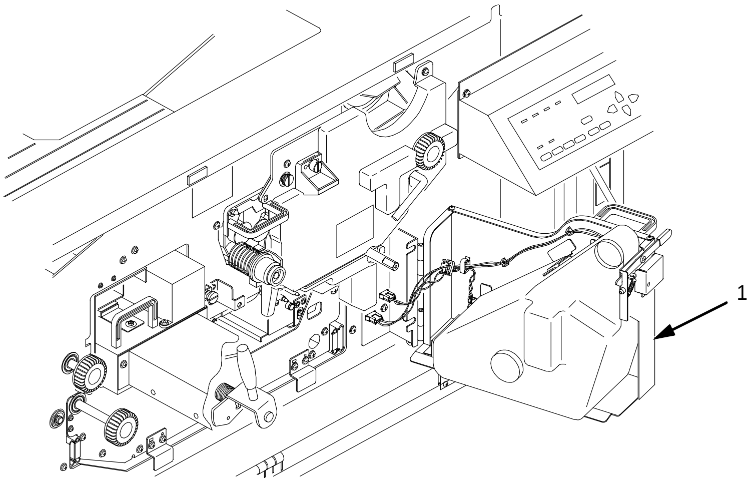

Legend:

1) Waste Toner Recovery Unit

To replace the waste toner bottle, perform the following steps:

1. Place the printer OFFLINE when paper motion stops, wait 15 seconds, then open the printer front upper cover.

2. Lower the lever, pull the green handle toward you, and open the waste toner recovery unit.

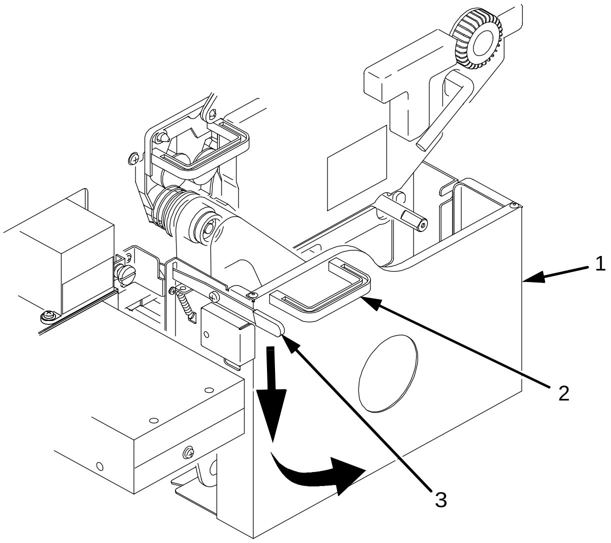

Legend:

1) Waste Toner Recovery Unit
2) Green Handle
3) Opening Lever

3. Remove the cap from the outside of the waste toner bottle, and cap the toner bottle.

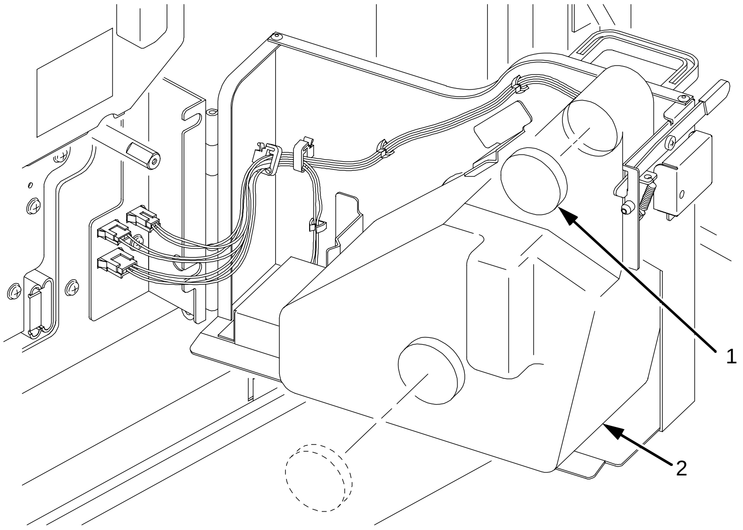

Legend:

1) Cap
2) Waste Toner Bottle

4. Remove the waste toner bottle from the unit and discard it.
5. Install a new waste toner bottle.
6. Close the printer front cover.
7. Clear Error 28, “WASTE TONER FULL,” as follows:
    a. Press CLEAR.
    b. Press UP and DOWN to unlock the configuration menu.
    c. Enter the configuration menu and select the Paper Control menu.
    d. Select the “Reset Toner Full” option and press ENTER.
    e. Exit the configuration menu.
    f. Press ONLINE.

Replacing The Photoreceptor Drum

Drum life is dependent upon media used and proper maintenance and operation of the printer. Print media other than bond paper (e.g., labels, card stock, plastic, or vinyl) may reduce drum life as much as 50%.

To replace the drum, you will need a drum auxiliary rod. Please read all steps before beginning the replacement procedure.

CAUTION **Replacement of the photoreceptor drum should be performed only by an individual who has received the appropriate training. Do not attempt this procedure without the drum auxiliary rod (P/N 703531-170), as you may damage the drum.**

1. Turn the power switch OFF.
2. Open the printer front upper cover. (See page 52.)
3. Open the waste toner recovery unit by pushing downward on the lever. Pull the green handle and swing the unit outward away from the printer. (See page 60.)
4. Loosen the three thumbscrews on the upper inner cover. Then remove the cover.

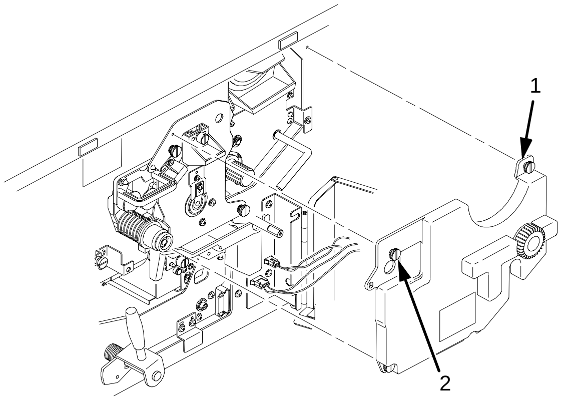

Legend:

1) Inner Cover (upper)
2) Thumbscrews (3)

CAUTION **Failure to perform Step 5 will damage the photoreceptor drum.**

5. Rotate the developing unit lever fully clockwise so that it is pointing straight up (to separate the developing unit from the photoreceptor drum).

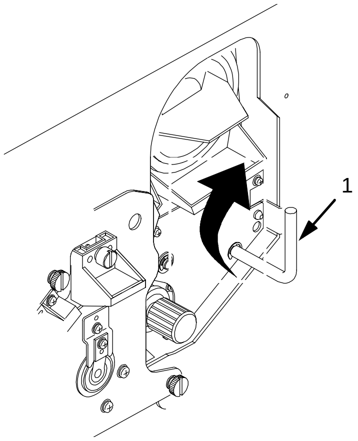

Legend:

1) Lever

6. Remove the developing unit by holding the lever in one hand and pulling the developing unit partially out of the printer.

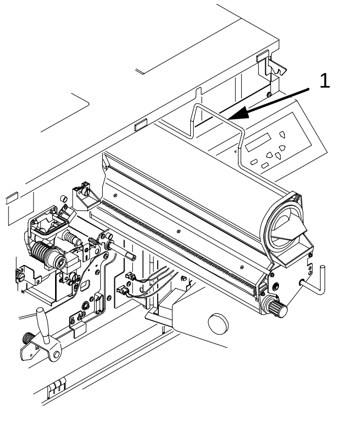

Legend:

1) Hanger

7. With your other hand, grasp the hanger and remove the developing unit from the printer.
8. Vacuum any spilled toner.

CAUTION **The transfer charger must be in the down position to avoid scratching the drum.**

9. Check that the transfer charger is in the down position. Move it to the down position by rotating the transfer elevator drive shaft counterclockwise. Watch the charger movement:
    a. If the charger starts to move up, it is already in the down position.
    b. If the charger starts to move down, continue to rotate the drive shaft until the charger reaches the complete down position.

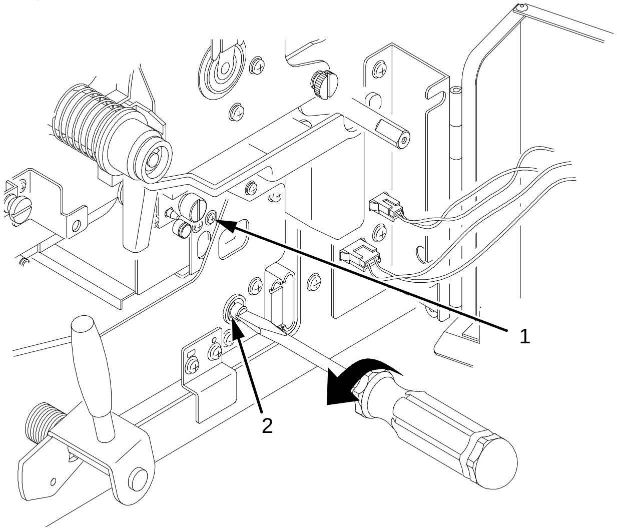

Legend:

1) Transfer Charger
2) Transfer Elevator Drive Shaft

10. Lower the transport unit by turning the green lever on the transport unit to the left.

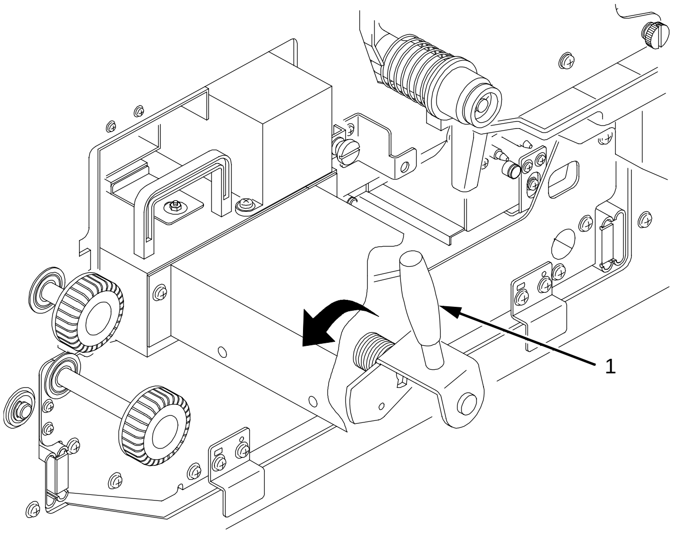

Legend:

1) Green Lever

11. Loosen the three thumbscrews securing the drum plate and remove the drum plate.

12. Remove the two screws on the lower inner cover. Then remove the cover.

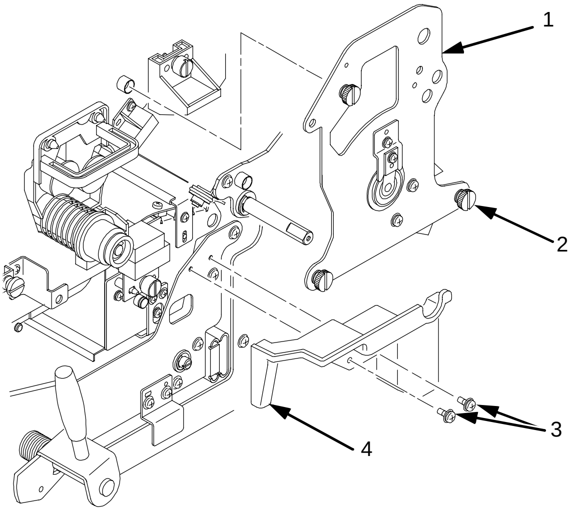

Legend:

1) Drum Plate
2) Thumbscrews (3)
3) Screws (2)
4) Inner Cover

13. Remove the nut from the end of the drum shaft.

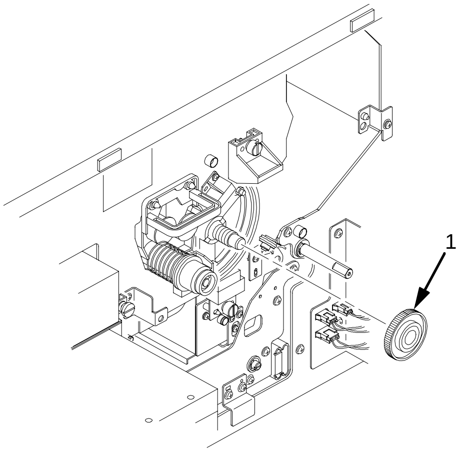

Legend:

1) Nut

14. Screw the drum auxiliary rod onto the drum shaft.

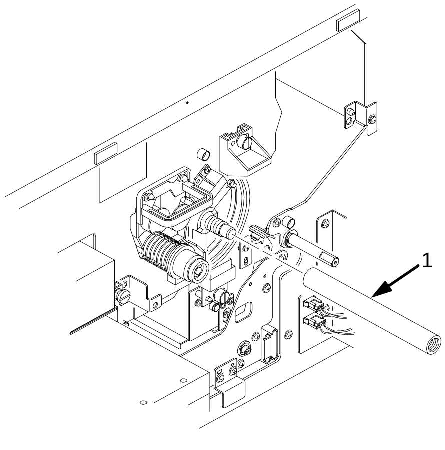

Legend:

1) Drum Auxiliary Rod

15. Carefully pull the old drum out along the drum auxiliary rod. Hold the ends when the drum is nearly out of the printer, and remove it with both hands.

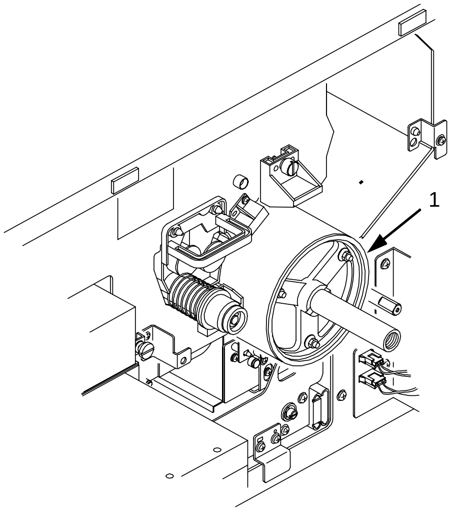

Legend:

1) Drum

16. Pack the old drum for shipment using the original packaging material, and close the cover of the box.
17. Wipe the drum shaft clean with a cloth.

CAUTION **Avoid touching the surface of the drum with your hands; it reduces the life of the drum.**

18. Remove the new photoreceptor drum from its package. Do not discard the packaging material, as it will be needed for future drum disposal.

NOTE: The ends of the drum are identical; there are no front or back ends. Wipe inside the endcaps of the drum with a cloth to ensure that they are clean.

CAUTION **Exposing the drum to light shortens its life. Do not expose the drum to direct sunlight, and install it within five minutes under typical room lighting conditions. When removing the drum from its packaging, do not touch the surface of the drum, because fingerprints and scratches can damage the surface and cause poor print quality.**

19. Using both hands, carefully slide the drum onto the drum auxiliary rod. When the drum reaches the area where the auxiliary rod connects to the drum shaft, lift the drum very slightly over the connection. Let the drum rest on the rubber rollers as you gently guide it into the printer.

CAUTION **The drum must rest on the rubber rollers to avoid being scratched.**

20. When the drum is fully inserted into the printer, the end of the drum will be slightly recessed relative to the front of the printer and the rubber guide rollers should be visible. Slightly lift the drum up off of the rubber rollers and rotate the drum by hand while applying inward pressure, until the drum moves slightly farther into the printer and locks in place.

CAUTION **In order to position the drum slot and the drum shaft pin, push the drum in all the way to the back and rotate it until you feel it drop in place. Failure to lock the drum in place properly may cause severe damage to the printer.**

Never force the drum onto the shaft. If it feels as though the drum is not seating properly, remove the drum and inspect the shaft for any foreign material or burrs.

21. Remove the drum auxiliary rod from the drum shaft.
22. Install the nut and tighten it securely by hand on the drum shaft.

23. Install the lower inner cover and secure with the two screws removed earlier.
24. Install the drum plate and tighten the thumbscrews. While installing the drum plate, place your thumb over the copper grounding clip and hold it in place. Otherwise the grounding clip can be bent, making no contact with the drum shaft.
25. After installing the drum plate, visually verify good electrical contact between the copper grounding clip and the end of the drum shaft.

    Alternatively, measure the resistance. Connect one lead of an ohmmeter to the bracket on the drum plate, and touch the other lead to the edge of the drum. Normal resistance should be 0Ω.
26. Install the developing unit.
27. Raise the transport unit. (Refer to Step 10.)
28. Install the upper inner cover and tighten the thumbscrews.
29. Close the waste toner recovery unit and ensure that it latches.
30. Close the printer front cover.

Proper Disposal Of A Drum Unit

Due to the nature of the material used in drum manufacturing, federal regulations prohibit inappropriate disposal of laser print drums. Dispose of used drums by shipping them to one of the following:

Within U.S.A.
U.S. Fuji Electric Inc.
240 Circle Drive N.
Piscataway, NJ 08854
Attn: Rod Storm
Phone: (732) 560-9410

Outside U.S.A.
Fuji Distribution Europe B.V.
Attn: Mr. Asada
Leisteen 7,2132 ME
Hoofddorp,
The Netherlands.
TEL: 20-6534790

Replacing The Developer

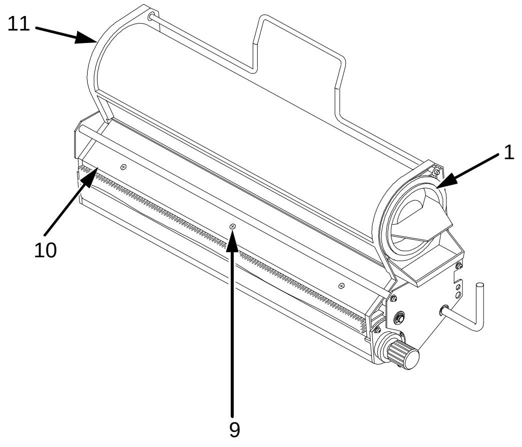

Cross Section of
Developing Unit

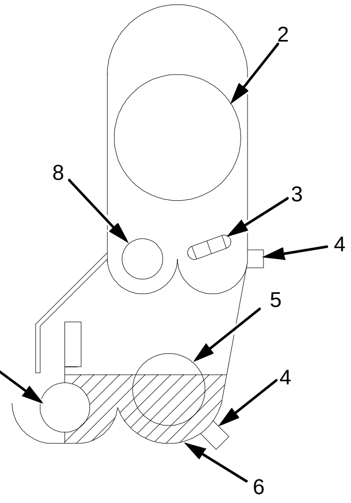

Legend:

1) Toner Cartridge
2) Toner Hopper
3) Auger
4) Toner Sensor
5) Agitation Roller
6) Developing Tank
7) Developing Roller
8) Toner Supply Roller
9) Screws (3)
10) Cover
11) Developing Unit

Developing Unit Removal

1. Turn the power switch OFF.
2. Open the printer front upper cover. (See page 52)
3. Prepare a plastic bag over which the developing unit can be placed.
4. Remove the developing unit from the printer (See page 73.) and place it on the plastic bag.

IMPORTANT **When replacing developer in an existing developing unit, you must empty and clean the unit before adding new developer (every 150,000 pages).**

Removing Old Developer

5. Turn the toner cartridge knob counterclockwise until it stops, then remove the cartridge from the developing unit.

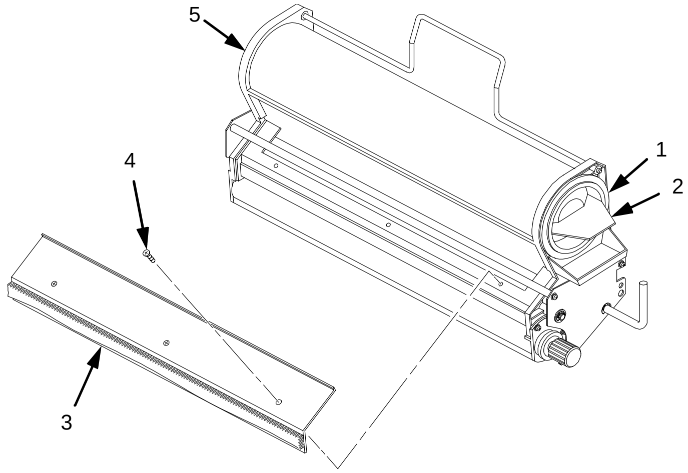

Legend:

1) Toner Cartridge
2) Toner Cartridge Knob
3) Cover
4) Screws (3)
5) Developing Unit

6. Remove the three screws on the developing unit cover and detach the cover.

CAUTION **The toner sensor is sensitive to both electrostatic discharge (ESD) and positional adjustment. Do not touch the sensor with your hand or jar it from its factory-set position.**

7. Put the developing unit in the plastic bag and do the following:
    a. Remove the developer and toner in the toner hopper by gently shaking the developing unit up and down with the opening of the toner cartridge facing downward.
    b. Rotate the developing unit and gently shake it, to allow any remaining developer or toner to fall out of the cover slot.
8. Remove the developing unit from the plastic bag and place it on a protected surface.
9. Remove any developer and toner which remains on the toner supply roller and the auger by vacuuming the entrance of the toner hopper using a toner vacuum cleaner equipped with a narrow nozzle.

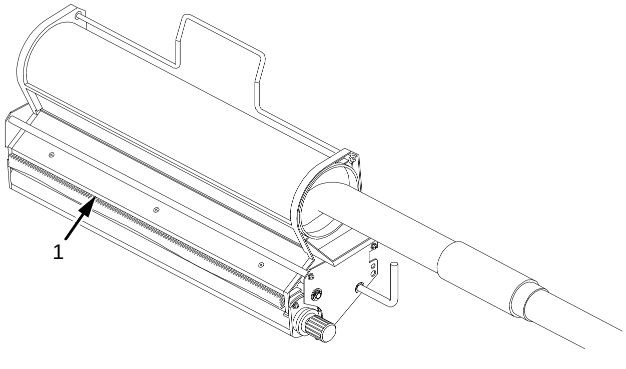

Legend:

1) Toner Spray-Guard Brush

10. Vacuum the toner from the toner spray-guard brush on the developing unit.

Adding New Developer

11. Shake the new developer bottle several times, remove the bottle cap, and screw the nozzle tightly onto the bottle.
12. While rotating the developing roller knob counterclockwise, evenly pour the entire bottle of developer powder into the developing unit.

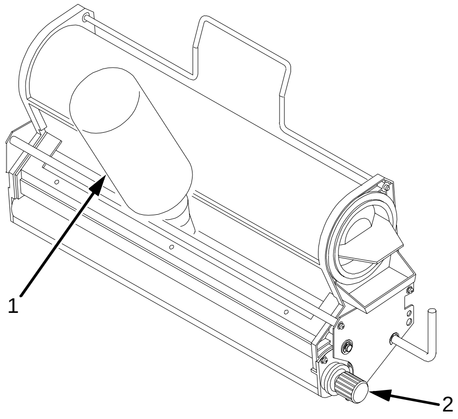

Legend:

1) Bottle of new Developer
2) Developing Roller Knob

13. Replace the cover and tighten the screws.

IMPORTANT **If toner or developer spills on clothing, use cold water to remove it.**

Replacing The Developing Unit

CAUTION **The developing unit should be removed only by an individual who has received the appropriate training. Be careful not to damage the sensors while cleaning the developing unit. (If damage occurs, contact your service representative.)**

Developing Unit Removal

1. Turn the power switch OFF.
2. Open the printer front upper cover. (See page 52.)
3. Open the waste toner recovery unit by pushing downward on the lever. Pull the green handle and swing the unit outward away from the printer. (See page 60.)
4. Remove the three thumbscrews on the upper inner cover. Then remove the cover. (See page 60.)

CAUTION **Failure to perform step 5 will damage the photoreceptor drum.**

5. Rotate the developing unit lever fully clockwise so that it is pointing straight up (to separate the developing unit from the photoreceptor drum).

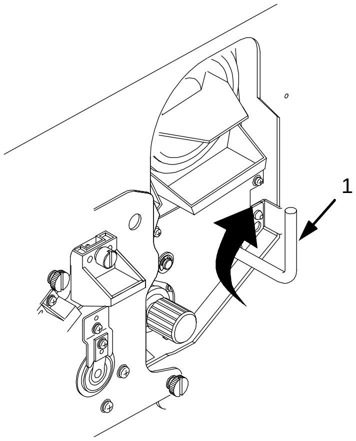

Legend:

1) Lever

6. Remove the developing unit by holding the lever in one hand and pulling the developing unit partially out of the printer.

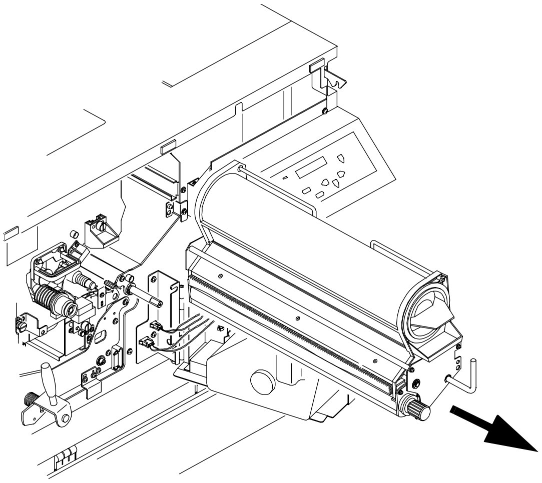

7. With your other hand, grasp the hanger and remove the developing unit from the printer.

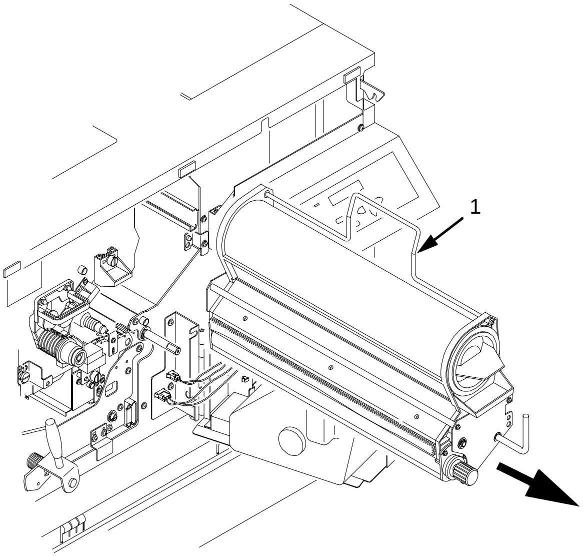

Legend:

1) Hanger

8. Place the old developing unit in a plastic bag and dispose of it properly.
9. Vacuum any spilled toner.
10. Remove a new developing unit from its package, and add developer to the unit.

Developing Unit Installation

CAUTION **Failure to perform step 11 will damage the photoreceptor drum.**

11. On the developing unit, rotate the lever fully clockwise so that it is pointing straight up. (See page 75.)
12. Holding the lever in one hand and the hanger in the other hand, insert the developing unit on the guide rail.
13. Rotate the hanger to the right so that it rests against the developing unit, and push the developing unit in.

14. Rotate the developing roller knob counterclockwise until the unit drops into its final resting position. The positioning pin should protrude through the main body of the developing unit.

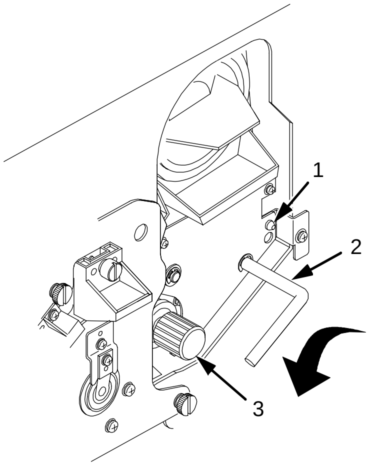

Legend:

1) Positioning Pin
2) Lever
3) Developer Roller Knob

15. Rotate the developing unit lever fully counterclockwise to lock the developing unit in place.
16. Install the upper inner cover, and secure it with the three thumbscrews. (See page 60.)
17. Close the waste toner recovery unit and ensure that it latches.
18. Close the printer front cover.

4

Scheduled Maintenance

Maintaining Print Quality

To maintain good print quality, clean the printer according to the schedules and procedures listed in this chapter.

If print quality problems occur, clean the following areas (see Maintenance Tools on page 78 for tool part numbers):

1. Do a General Cleaning. (See page 95.)

NOTE: Recommended toner vacuum cleaner models are listed on page 78.

2. Clean the main charger, precharger, and transfer charger. For cleaning instructions, see page 104 for the main charger, and page 108 for the precharger and transfer charger.
3. If the printer is equipped with the cut sheet option, clean the pickup rollers and the reverse rollers inside the cut paper unit, using the Toraysee cloth. For cleaning instructions, see page 115 for the pickup rollers, and page 118 for the reverse rollers.
4. Clean the following areas with the designated tools:
   a. Clean the drum with the drum freshener (only when smears appear on print samples due to the drum).
   b. Clean the LED array and the SELFOC® lens (LED print head) with the Toraysee™ cloth.
   c. Clean the fuser cover glass with a razor blade or the cover glass scraper.

If the print quality is still poor after cleaning the printer, the chargers may need to be replaced. Contact your authorized service representative for further assistance.

NOTE: For replacement intervals, see the maintenance schedules that begin on page 81. For replacement procedures, see Chapter 3, “Consumables Replacement."

Maintenance Tools

In order to perform maintenance on the printer, the following tools are required:

Item	Part Number
Brush cleaner	703531-169
Drum auxiliary rod	703531-170
Drum freshener pad	703531-171
Fuser cover glass scraper	703531-187
Special dry tissue paper	703531-188
Standard toner vacuum cleaner	See recommended models below.
Toraysee cloth	703531-183
Wire cleaner	703531-168
9 inch Phillips #1 screwdriver	N/A

Recommended toner vacuum cleaner models are:

- 3M® model 497-AJM standard VAC with Type 1 filter
- 3M model 497-AB 220V with Type 1 filter
- Hitachi® CV-TN10 with TN-15 filter

Service Level Page Counts

IMPORTANT **You should maintain a record of all maintenance performed on your printer. Maintenance log sheets are provided starting on page 81*.* These may be photocopied and kept in a binder near the printer. Be sure to use them each time either you or your service provider perform printer maintenance.**

Each time you complete a level of preventive maintenance, you must reset the service level page count by selecting the User Maintenance option on the Maintenance menu. The Maintenance menu is detailed in the *User's Manual.* Levels A, B, and C are your responsibility, while levels D through H are the responsibility of your service provider.

When the page count reaches an increment of one of the maintenance intervals listed below, the control panel displays one of the following messages:

User Maint Level *X*	(User)
Tech Service Level *X*	(Service Technician)

Service Level *X* represents the level of service required:

- Level A = every 15,000 pages
- Level B = every 150,000 pages
- Level C = every 600,000 pages
- Level D = every 300,000 pages
- Level E = every 600,000 pages
- Level F = every 900,000 pages
- Level G = every 1,200,000 pages
- Level H = every 2,400,000 pages

A service level includes the levels that precede it. For example, at 150,000 pages, you should perform Level B *and* Level A service. At 900,000 pages, your service provider should perform Level F, Level E, *and* Level D service.

Note that this condition will not cause the printer to stop printing. When one of the above messages appears, you should perform the appropriate scheduled maintenance or call your factory-trained service representative to perform the maintenance.

Clearing Service Level Messages

Once you have performed a level of service, you must clear the page count for that service level. Note that when you clear a higher service level, the levels that precede it are also cleared. For example, clearing level C also clears levels A and B.

To clear a service level (level A, for example), select the Maintenance menu from the control panel, select the User Maint option, then select “Clear Level A” by pressing ENTER.

Maintenance Schedules

User Cleaning Schedule

Each time you perform maintenance, you must reset the service level page count by selecting the User Maintenance option on the Maintenance menu. This removes the maintenance error message. The Maintenance menu is detailed in the *User's Manual.*

The following actions should be performed after the specified number of letter size pages (4% coverage) have been printed.

Action	Frequency (Pages)	Service Level
General cleaning	15,000[1]	A
Major Cleaning	150,000	B
Note 1: Every 15,000 pages or 6 paper jams, whichever takes place first.		

NOTE: On the following pages are maintenance logs you can photocopy.

Level A Maintenance - 15,000 Pages (User)

Action	Item	Part #	Performed By	Date
Clean	General cleaning	n/a		
Clean	Main charger	705741-001		
Clean	Precharger	705742-001		
Clean	Transfer charger	705743-001		
Clean	Cover glass	n/a		
Clean See Note 1	Cut sheet cassette pickup rollers	703531-050		
Clean See Note 2	Cut sheet cassette reverse rollers	703531-051		
Replace See Note 3	Toner Cartridge	703532-001		

Note 1: Every 15,000 pages or 6 page jams, whichever occurs first.

Note 2: Only applies to printers with the cut sheet option installed.

Note 3: Replace the toner cartridge approximately every 21,000 pages or as needed (for page coverage of 4%).

Level B Maintenance - 150,000 Pages(User)

Action	Item	Part #	Performed By	Date
Clean	General cleaning	n/a		
Clean	Main charger	705741-001		
Clean	Precharger	705742-001		
Clean	Transfer charger	705743-001		
Clean See Note1	Cover glass	n/a		
Clean	SELFOC lens	n/a		
Vacuum	Lamp housing filter	202838-001		
Vacuum	Cleaning unit	705740-001		
See Note 2	Photoreceptor drum	703535-001		
Replace See Note 3	Toner cartridge	703532-001		
Replace	Developer	703548-001		
Replace	Waste toner bottle	703539-001		
Replace See Note 4	Cut sheet cassette pickup rollers	703531-050		
Replace See Note 4	Cut sheet cassette reverse rollers	703531-051		

Note 1: Every 15,000 pages or every 6 paper jams, whichever occurs first.

Note 2: Inspect every 150,000 pages; clean if needed. Replace at 300,000 pages or sooner if print quality is no longer acceptable. Drum life is dependent upon media being used and proper maintenance and operation of the printer. Print media other than bond paper (e.g. labels, card stock, plastic, or vinyl) may reduce drum life as much as 50%.
Note 3: Replace the Toner cartridge approximately every 21,000 pages or as needed (for page coverage of 4%).
Note 4: Only applies to printers with the cut sheet option installed.

Level C Maintenance - 600,000 Pages (User)

Action	Item	Part #	Performed By	Date
Clean	General cleaning	n/a		
Clean See Note 1	Cover glass	n/a		
Clean	SELFOC lens	n/a		
See Note 2	Photoreceptor drum	703535-001		
Replace	Developing unit	703533-001		
Replace See Note 3	Toner cartridge	705739-001		
Replace	Waste toner bottle	703539-001		
Replace See Note 4	Cut sheet cassette pickup rollers	703531-050		
Replace See Note 4	Cut sheet cassette reverse rollers	703531-051		

Note 1: Every 15,000 pages or 6 paper jams, whichever occurs first.

Note 2: Inspect every 150,000 pages; clean if needed. Replace at 300,000 pages or sooner if print quality is no longer acceptable. Drum life is dependent upon media being used and proper maintenance and operation of the printer. Print media other than bond paper (e.g., label, card stock, plastic, or vinyl) may reduce drum life as much as 50%.

Note 3: The Toner cartridge should be replaced approximately every 21,000 pages or as needed (for page coverage of 4%).

Note 4: Only applies to printers with the cut sheet options installed.

Level D Maintenance - 300,000 Pages (Service)

Action	Item	Part #	Performed By	Date
Clean	Flash power supply filter	n/a		
Replace	Main charger	705741-001		
Replace	Precharger	705742-001		
Replace	Transfer charger	705743-001		
Replace	Smoke filter	703540-001		

Level E Maintenance - 600,000 Pages (Service)

Action	Item	Part #	Performed By	Date
Clean	Lamp housing filter	202838-001		
Clean	LED air filter	703543-001		
Clean	Flash power supply filter	n/a		
Replace	Main charger	705741-001		
Replace	Precharger	705742-001		
Replace	Transfer charger	705743-001		
Replace See Note 1	Cleaning unit	705740-001		
Replace	Smoke filter	703540-001		
Replace	Transporting belt-3	703531-035		
Note 1: When the cleaning unit has been vacuumed every 150,000 pages and has been used under nominal operating conditions, it must be replaced at 600,000 pages. However, it may need to be replaced more frequently if used for high–density printing or printing on uneven media, or if used under severe operating conditions.				

Level F Maintenance - 900,000 Pages (Service)

Action	Item	Part #	Performed By	Date
Clean	Flash power supply filter	n/a		
Replace	Main charger	705741-001		
Replace	Precharger	705742-001		
Replace	Transfer charger	705743-001		
Replace	Smoke filter	703540-001		
Replace	Xenon lamp	703541-001		

Level G Maintenance - 1,200,000 Pages (Service)

Action	Item	Part #	Performed By	Date
Clean	Lamp housing filter	202838-001		
Clean	LED air filter	703543-001		
Clean	Flash power supply filter	n/a		
Replace	Main charger	705741-001		
Replace	Precharger	705742-001		
Replace	Transfer charger	705743-001		
Replace See Note 1	Cleaning unit	705740-001		
Replace	Smoke filter	703540-001		
Replace	Transporting belt-3	703531-035		
Note 1: When the cleaning unit has been vacuumed every 150,000 pages and has been used under nominal operating conditions, it must be replaced at 600,000 pages. However, it may need to be replaced more frequently if used for high–density printing or printing on uneven media, or if used under severe operating conditions.				

Level H Maintenance - 2,400,000 Pages (Service)

Action	Item	Part #	Performed By	Date
Clean	Flash power supply filter	n/a		
Replace	Main Charger	705741-001		
Replace	Precharger	705742-001		
Replace	Transfer charger	705743-001		
Replace See Note 1	Cleaning unit	705740-001		
Replace	Smoke filter	703540-001		
Replace	Transporting belt-3	703531-035		
Replace	Lamp housing filter	202838-001		
Replace	LED air filter	703543-001		
Replace	Tractor belt 3M264	703531-031		
Replace	Drum belt 3M264	703531-031		
Replace	Capacitor (see ***WARNING*** on following page)	703542-001		
Replace	LED for discharge lamp	703531-118		
See Note 2	Feed Roller	703531-563		
See Note 2	Resist Roller	703531-565		
See Note 2	Roller, Pre Drum	703531-590		
See Note 2	Lever, Empty	202840-001		
Replace	EPS1, EPS3, and EPS4 Sensor Levers	703531-585 703531-588 703531-067		
Note 1: When the cleaning unit has been vacuumed every 150,000 pages and has been used under nominal operating conditions, it must be replaced at 600,000 pages. However, it may need to be replaced more frequently if used for high–density printing or printing on uneven media, or if used under severe operating conditions. Note 2: Clean and inspect; replace if worn. (Only applies to printers with the cut sheet option installed.)				

WARNING **The flash fuser capacitor (P/N 703531-561) must be replaced at least every 2,400,000 letter size pages. Failure to do so may endanger equipment and personnel.**

WARNUNG

Der kondensator der Flash-Einbrennvorrichtung muß nach mindestens 2.400.000 Seiten im Format “Letter” ausgetauscht werden. Geschieht dies nicht, ist mit Personen- und Sachschäden zu rechnen.

AVISO

El condensador flash del fusor se debe sustituir como mínimo cada 2.400.000 páginas de tamaño carta. De lo contrario, pueden causarse daños a los equipos y al personal.

ATTENTION

Pour éviter tout risque de dégâs matériels et corporels, remplacez l’unité de flashage aprés l’impression de 2 400 000 pages de format lettre.

AVVERTENZA

Il condensatore dell’unitá fusore deve essere sostituito almeno ogni 2.400.000 pagine in fprmato lettera. La mancata sostituzione puó causare lesione al personale e danni all’apparecchiatura.

User Replacement Schedule

The following items should be replaced after the specified number of letter size pages (4% coverage) have been printed.

Item	Part Number	Frequency (Pages)	Service Level
Toner Cartridge	703532-001	21,000	As needed
Waste toner bottle	703539-001	150,000	B
Photoreceptor Drum	703535-001	150-300,000 See Note 1	B (As needed)
Developer	703548-001	150,000	B
Cut sheet cassette pickup rollers	703531-050	150,000 See Note 2	B
Cut sheet cassette reverse rollers	703531-051	150,000 See Note 2	B
Developing unit	705739-001	450,000	C

Note 1: Replace at 300,000 pages or sooner if print quality is no longer acceptable. Drum life is dependent upon media used and proper maintenance and operation of the printer. Print media other than bond paper (e.g., labels, card stock, plastic, or vinyl) may reduce drum life as much as 50%.

Note 2: Only applies to printers with the cut sheet option installed.

Tech Service Replacement Schedule

Each time a service technician completes a level of preventive maintenance, he or she must reset the service level page count by selecting the Technician Service option on the Maintenance menu. This removes the maintenance error message.

The following actions should be performed by a service technician after the specified number of letter size pages (4% coverage) have been printed.

Item	Part #	Frequency (Pages)	Action	Service Level
Main charger	705741-001	300,000	Replace	D
Precharger	705742-001	300,000	Replace	D
Transfer charger	705742-001	300,000	Replace	D
Smoke filter	703540-001	300,000	Replace	D
Flash power supply filter	n/a	300,000	Clean	D
LED air filter	703543-001	600,000	Clean	E
Lamp housing filter	202838-001	600,000	Clean	E
Cleaning unit	705740-001	600,000 See Note 1	Replace	E
Transporting belt-3	703531-035	600,000	Replace	E
Xenon lamp	703541-001	900,000	Replace	F
Main charger	705741-001	1,200,000	Replace	G
Precharger	705742-001	1,200,000	Replace	G
Transfer charger	705743-001	1,200,000	Replace	G
Cleaning unit	705740-001	1,200,000 See Note 1	Replace	G
Lamp housing filter	202838-001	2,400,000	Replace	H

LED air filter	703543-001	2,400,000	Replace	H
Tractor belt, 3M264	793531-031	2,400,000	Replace	H
Drum belt, 3M264	703531-031	2,400,000	Replace	H
Capacitor (**see *WARNING* on next page**)	703542-001	2,400,000	Replace	H
LED for discharge lamp	703531-118	2,400,000	Replace	H
Feed Roller	703531-563	2,400,000 See Note 2	Clean and inspect: replace if worn,	H
Resist Roller	703531-565	2,400,000 See Note 2	Clean and inspect; replace if worn.	H
Roller; Pre Drum	703531-590	2,400,000	Clean and inspect; replace if worn,	H
Lever, Empty	202840-001	2,400,000 See Note 2	Clean and inspect; replace if worn	H
EPS1 Sensor Lever	703531-585	2,400,000	Replace	H
EPS2 Sensor Lever	703531-588	2,400,000	Replace	H
EPS3 Sensor Level	703531-067	2,400,000	Replace	H

Note 1: When the cleaning unit has been vacuumed every 150,000 pages and has been used under nominal operating conditions, it must be replaced at 600,000 pages. However, it may need to be replaced more frequently if used for high-density printing or printing on uneven media, or if used under severe operating conditions.

Note 2: Only applies to printers with the cut sheet option installed.

WARNING **The flash fuser capacitor (P/N 703531-561) must be replaced at least every 2,400,000 letter size pages. Failure to do so may endanger equipment and personnel.**

WARNUNG

Der kondensator der Flash-Einbrennvorrichtung muß nach mindestens 2.400.000 Seiten im Format “Letter” ausgetauscht werden. Geschieht dies nicht, ist mit Personen- und Sachschäden zu rechnen.

AVISO

El condensador flash del fusor se debe sustituir como mínimo cada 2.400.000 páginas de tamaño carta. De lo contrario, pueden causarse daños a los equipos y al personal.

ATTENTION

Pour éviter tout risque de dégâs matériels et corporels, remplacez l’unité de flashage aprés l’impression de 2 400 000 pages de format lettre.

AVVERTENZA

Il condensatore dell’unitá fusore deve essere sostituito almeno ogni 2.400.000 pagine in fprmato lettera. La mancata sostituzione puó causare lesione al personale e danni all’apparecchiatura.

CAUTION **Due to the high temperature of the flash fusing unit, keep the area under the fuser free of paper debris.**

General Cleaning

To maintain optimum print quality, the printer should be cleaned on a regular basis. Depending upon the density of your print jobs, the printer may require cleaning every 10,000-20,000 sheets.

Vacuuming The Printer

Clean the following areas with a toner vacuum cleaner to remove loose toner particles, paper dust, and other debris:

- Paper input and exit areas
- Front cover
- Waste toner area
- Area around the developing unit (including the toner cartridge and spray-guard brush)
- Entire paper transport system
- Area around the cleaning unit

Following is the general cleaning procedure:

1. Turn the power switch OFF.
2. Open the printer front upper cover.
3. Using a vacuum, clean the toner, paper dust, etc. inside the front cover.

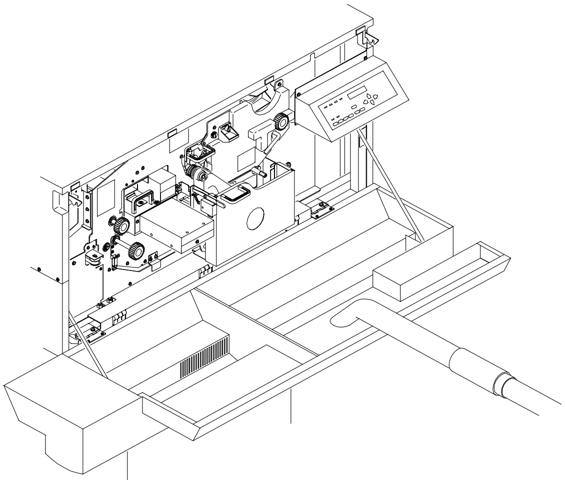

4. On the waste toner recovery unit, press the Open lever down. Pull the handle toward you and open the unit.

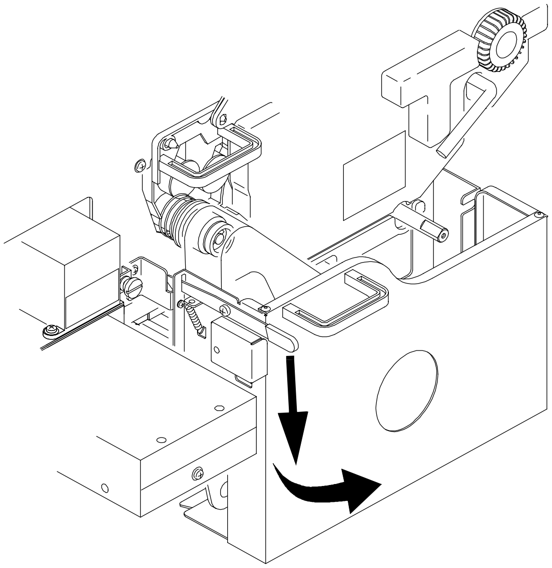

5. Vacuum the developing unit and toner hopper.

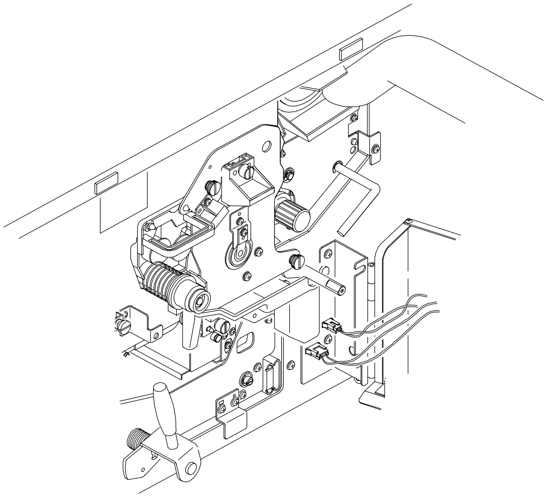

6. Vacuum the cleaning unit.

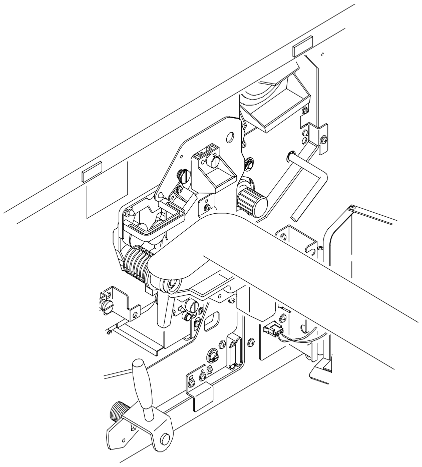

7. Vacuum the fuser unit.

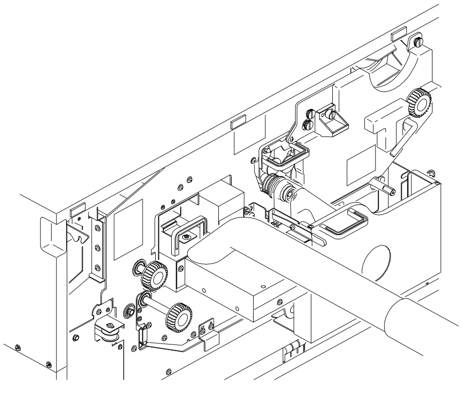

8. Vacuum the lamp housing filter on the underside of the fuser unit.

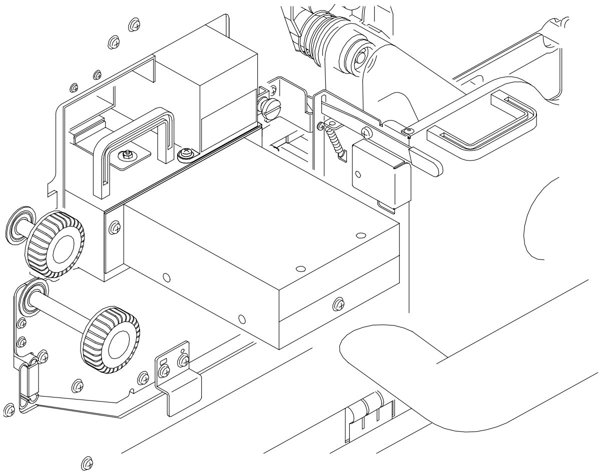

CAUTION **The transfer charger must be in the down position to avoid scratching the drum. Failure to perform steps 9 and 10 will damage the drum.**

9. Check that the transfer charger is in the down position, and if not, move it to the down position by rotating the transfer elevator drive shaft counterclockwise. Watch the charger movement:
   a. If the charger starts to move up, it is already in the down position.
   b. If the charger starts to move down, continue to rotate the drive shaft until the charger reaches the complete down position.

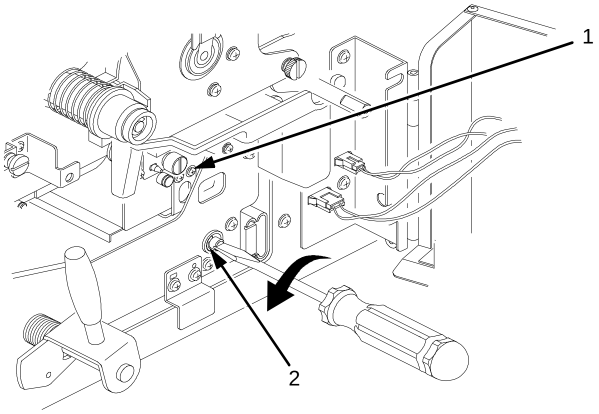

Legend:

1) Transfer Charger
2) Transfer Elevator Drive Shaft

10. Lower the transport surface by turning on the green lever on the transport unit to the left.

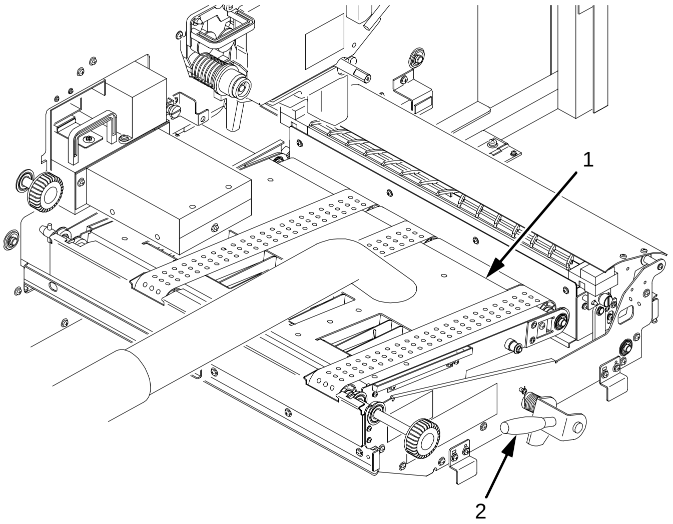

Legend:

1) Transport Unit
2) Green Lever

11. Pull the transport unit toward you until it stops.
12. Using a vacuum, clean the toner, paper dust, etc. Be sure to clean under the transport unit as well.
13. Wipe off the dirt on the transport surface with wet tissue paper.
14. Using an ammonia-based wax-free cleaner or rubbing alcohol, clean the belts to remove residue buildup and restore their tacky surface.
15. Push the transport unit into the printer while holding down the green lever. When the transport unit is in position, raise the green lever to the right to raise the transport surface.

16. Using a vacuum, clean the toner, paper dust, etc. in the tractor area.

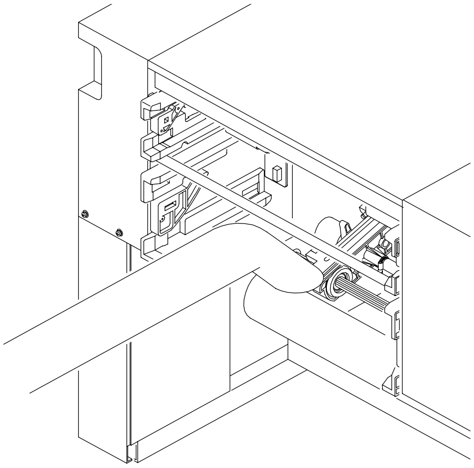

17. Open the paper guide by pressing the green lever down.

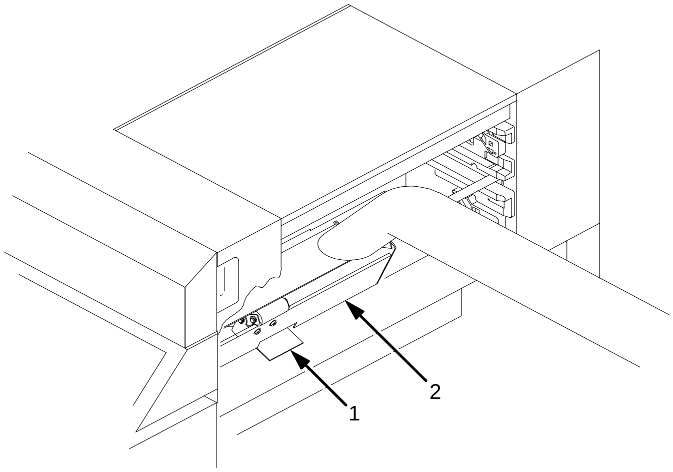

Legend:

1) Green Lever
2) Paper Guide

18. Using a vacuum, clean the paper dust, etc. inside the paper guide.
19. Open the lid on the top cover.
20. Open the paper guide by pressing the guide lever down.
21. Using a vacuum, clean the paper dust, etc. inside the paper guide.

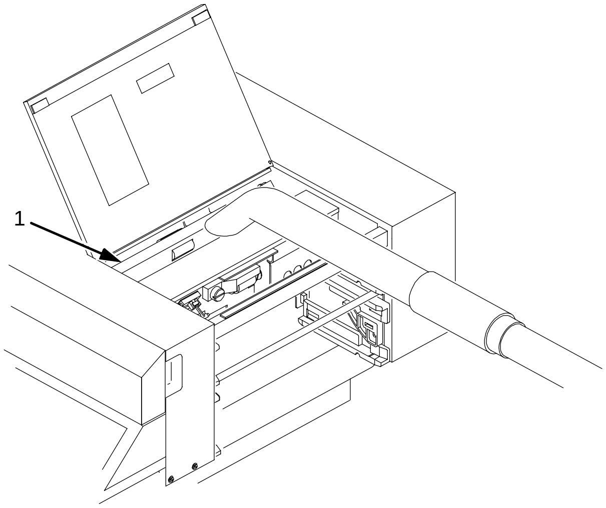

Legend:

1) Paper Guide

Cleaning The Chargers

1. Turn the power switch OFF.
2. Open the printer front upper cover.

Main Charger

CAUTION **Use caution in handling to avoid damaging or breaking the charger wires.**

3. Loosen the thumbscrew and remove the main charger by pulling it toward you.

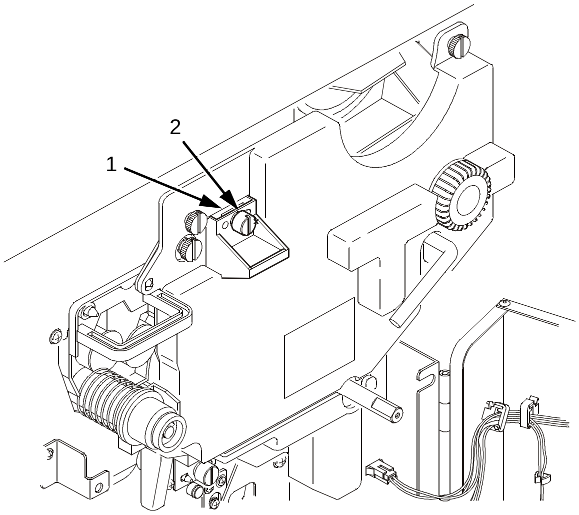

Legend:

1) Main Charger
2) Thumbscrew

4. Place the main charger on a flat, clean work surface.

5. Using the brush cleaner (listed on page 78), clean the exposed side of the charger grid and the body of the main charger.

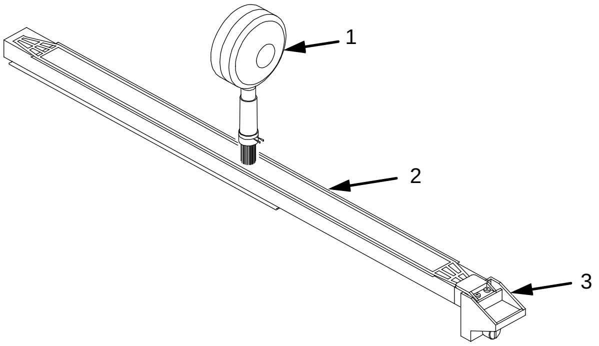

Legend:

1) Brush Cleaner
2) Charger Grid
3) Main Charger

6. Position the main charger with the charger grid up and the front of the charger toward you, as shown in the figure below. Refer to the inset drawing in the figure and remove the charger grid from the main charger as follows:
   a. While pressing the front retaining tab toward the rear of the charger, unhook the rear end of the charger grid from the rear retaining tab.
   b. Release the front retaining tab, then remove the charger grid from it.

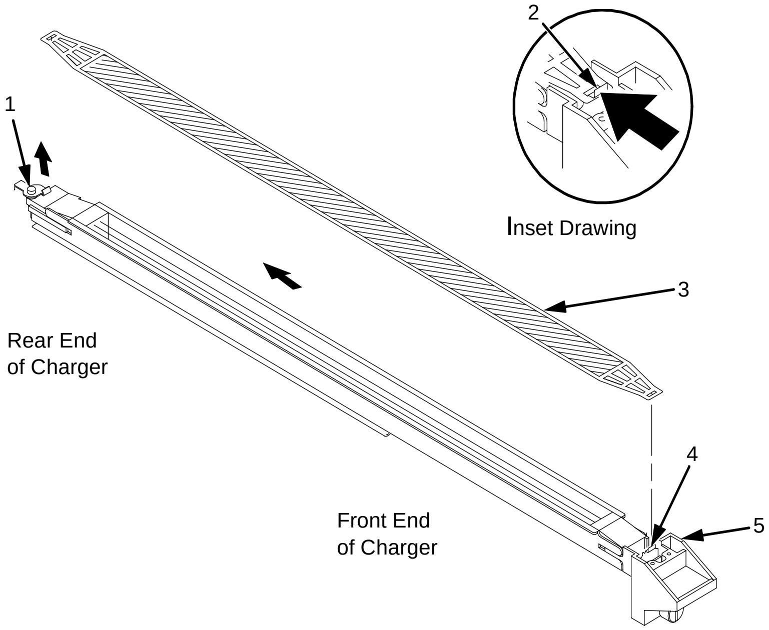

Legend:

1) Rear Retaining Tab
2) Front Retaining Tab (See Inset Drawing)
3) Charger Grid
4) Front Retaining Tab
5) Main Charger

7. Using the brush cleaner (listed on page 78), clean both sides of the charger grid, as shown below.

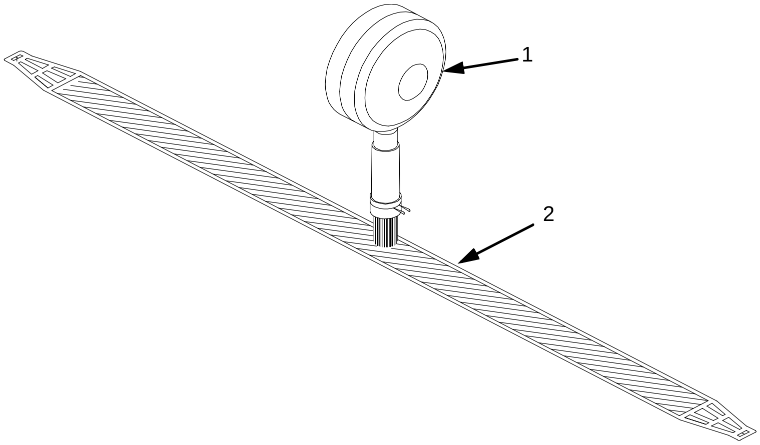

Legend:

1) Brush Cleaner
2) Charger Grid

8. Using the wire cleaner (listed on page 78), clean the two wires in the main charger, as shown below. Be sure that both wires are cleaned thoroughly. When dirt is caked on, the wires feel gritty. When clean, the wires feel smooth.

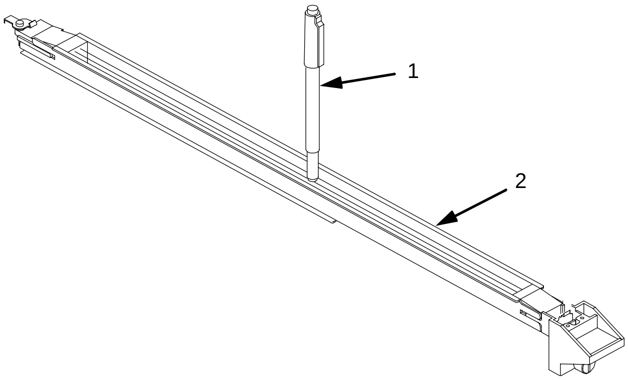

Legend:

1) Wire Cleaner
2) Main Charger

9. Install the charger grid.
10. Return the main charger to its original position. Fasten the main charger screw to secure it.

Precharger and Transfer/Separator Charger

CAUTION **Use caution in handling to avoid damaging or breaking the charger wires.**

11. Open the waste toner recovery unit.

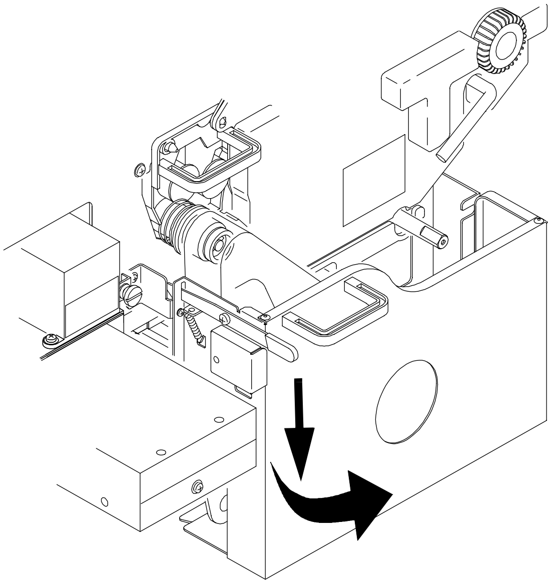

12. Loosen the precharger thumbscrew, and transfer/separator charger thumbscrew, and pull the chargers out of the printer.

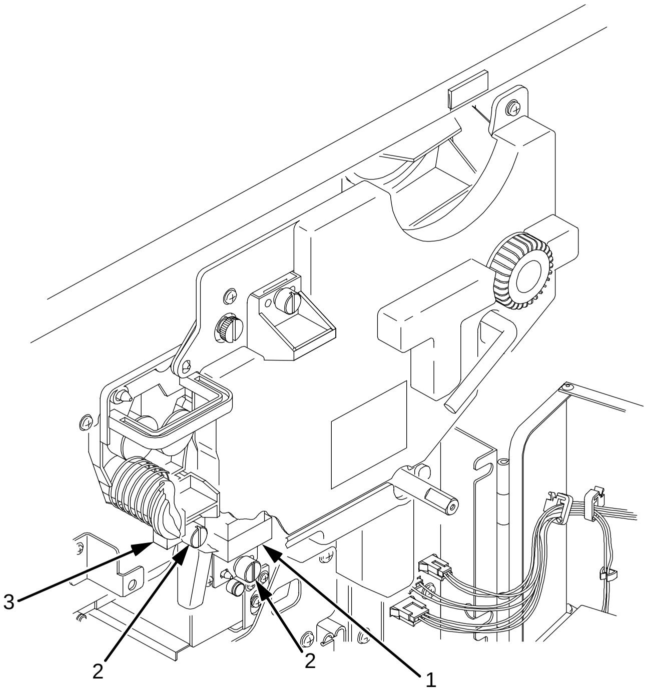

Legend:

1) Transfer/Separator Charger
2) Thumbscrews
3) Precharger

13. Place the chargers on a flat, clean work surface.
14. Using the brush cleaner and the wire cleaner (listed on page 78), remove the dust and dirt on the wires. When dirt is caked on, the wires feel gritty. When clean, the wires feel smooth.
15. Install the chargers. Fasten the charger screws to secure them.

Cleaning The Fuser Unit Cover Glass

WARNING **The fuser unit remains hot after operation. Wait until it has *completely* cooled down before handling it.**

WARNUNG

Die Einbrennvorrichtung behält auch nach dem Betrieb ihre Temperatur bei. Fassen Sie sie erst an, wenn sie *vollständig* abgekuhlt ist.

AVISO

La unidad de fusor estará a alta temperatura después de funcionar. Espere a que se haya en friado *por completo* antes de manipularia.

ATTENTION

L’unité de four est encore trés chaude aprés chaque opération. Attendez qu’elle refroidisse complétement avant de la manipuler.

AVVERTENZA

Dopo l’uso, l’unitá fusore é calda. Attendere il *completo* raffeddamento dell’unitá prima di intervenir sulla medesima.

1. Turn the power switch OFF.
2. Open the printer front upper cover.

CAUTION **The transfer charger must be in the down position to avoid scratching the drum. Failure to perform steps 3 and 4 will damage the drum.**

3. Check that the transfer charger is in the down position, and if not, move it to the down position by rotating the transfer elevator drive shaft counterclockwise. Watch the charger movement:
    a. If the charger starts to move up, it is already in the down position.
    b. If the charger starts to move down, continue to rotate the drive shaft until the charger reaches the complete down position.

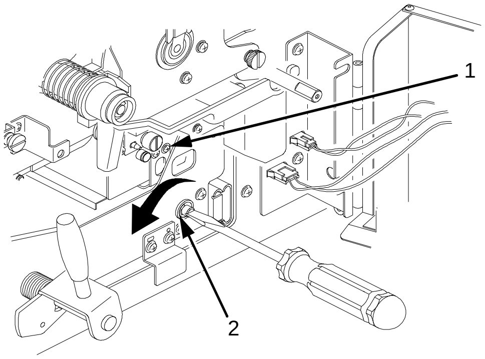

Legend:

1) Transfer Charger
2) Transfer Elevator Drive Shaft

4. Lower the transport surface by turning on the green lever on the transport unit to the left.

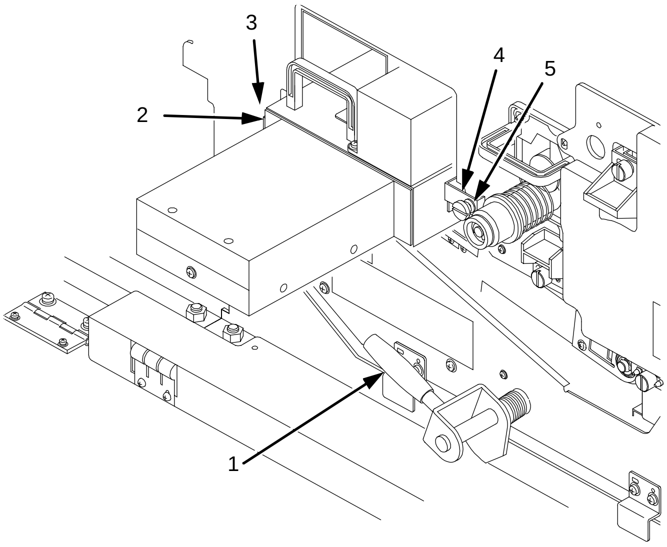

Legend:

1) Green Lever
2) Fuser Unit
3) Thumbscrew (not visible in figure)
4) Holding Plate
5) Thumbscrew

5. Loosen the thumbscrews on the right and left fuser unit holding plates.
6. Grasp the handle and pull out the fuser unit until the second handle is visible.
7. With the other hand, grasp the second handle and remove the fuser from the printer.
8. Place the fuser on a clean, flat surface with the cover glass facing up.

CAUTION **Do not scratch or place your hands directly on the cover glass. Fingerprints on the cover glass or lamps will cause them to break.**

9. Using the fuser cover glass scraper (listed on page 78) remove the dirt and toner buildup from the cover glass surface.

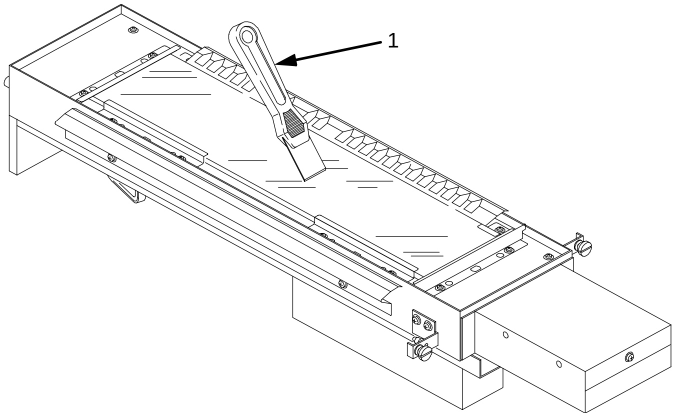

Legend:

1) Scraper

10. Wipe away any remaining toner or dirt with a Toraysee cloth (listed on page 78).

11. Remove the two screws that secure the lamp duct filter unit to the fuser, then remove the lamp duct filter unit and the foam gasket.

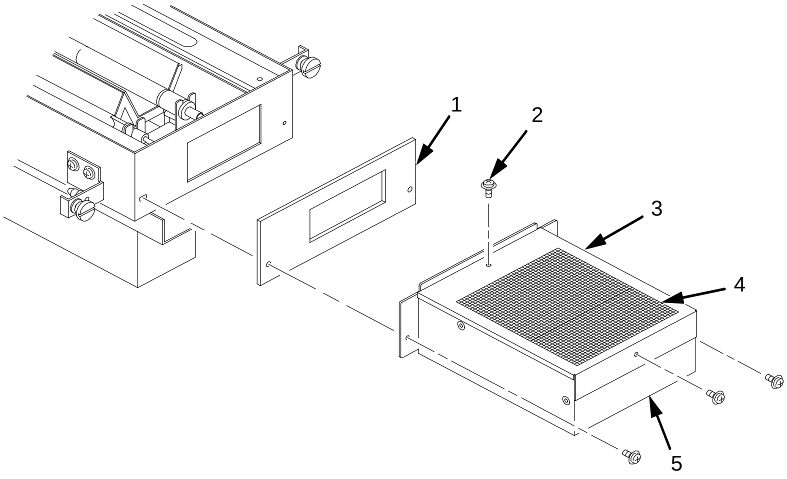

Legend:

1) Foam Gasket
2) Screw (4)
3) Filter Holding Plate
4) Lamp Filter (Air Filter)
5) Lamp Duct

12. Remove the two screws that secure the filter holding plate to the lamp duct filter unit, then remove the lamp filter.
13. Vacuum the lamp filter, then install it.
14. Vacuum any paper dust from the printer frame.
15. Install the fuser, making sure that the guide pins in the screw bracket align with the holes in the side frame of the printer.

Cleaning The Cut Sheet Option Rollers

NOTE: This procedure only applies to printers with the cut sheet option installed.

1. Turn the power switch OFF.
2. Remove the upper and lower paper cassettes from the printer.

Pickup Rollers

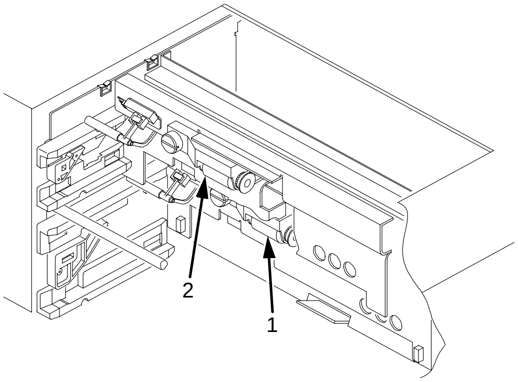

Legend:

1) Lower Pickup Roller Unit
2) Upper Pickup Roller Unit

3. There are two pickup roller units (upper and lower) located at the back of the cassette opening. On the upper roller unit, loosen the green thumbscrew. Slide the unit to the left, and pull the unit toward you and out of the printer.

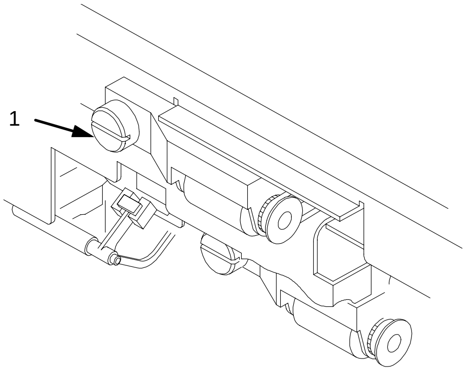

Legend:

1) Thumbscrew

4. On the lower roller unit, loosen the green thumb screw. Slide the unit to the left, and pull the unit toward you and out of the printer.
5. Wipe off the dirt on the pickup rollers with a Toraysee cloth (listed on page 78). Remove any label adhesive or forms residue with rubbing alcohol.

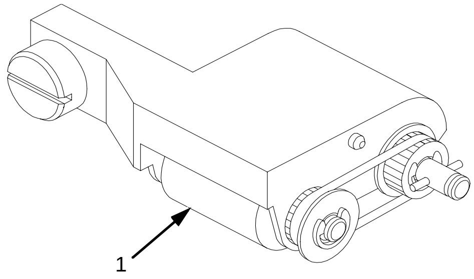

Legend:

1) Roller

6. Install the upper and lower pickup roller units:
   a. Align the shaft pin with the slot in the coupling, and align the alignment pin on the unit with the hole in the frame.
   b. Tighten the green thumbscrew.

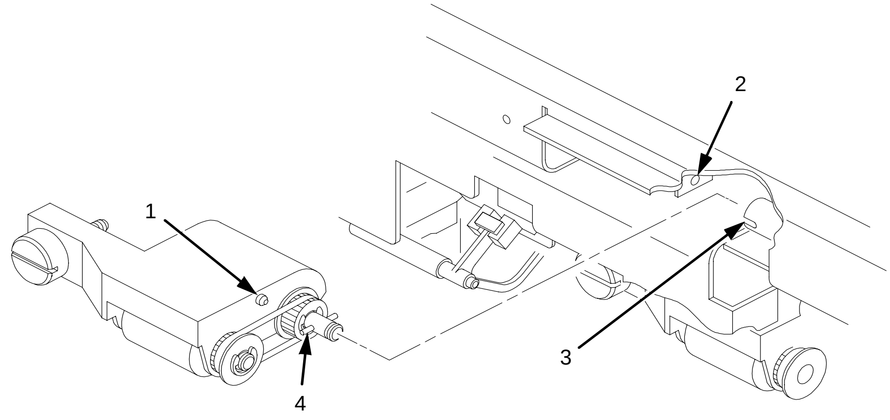

Legend:

1) Alignment Pin
2) Hole In The Frame
3) Coupling
4) Shaft Pin

Reverse Rollers

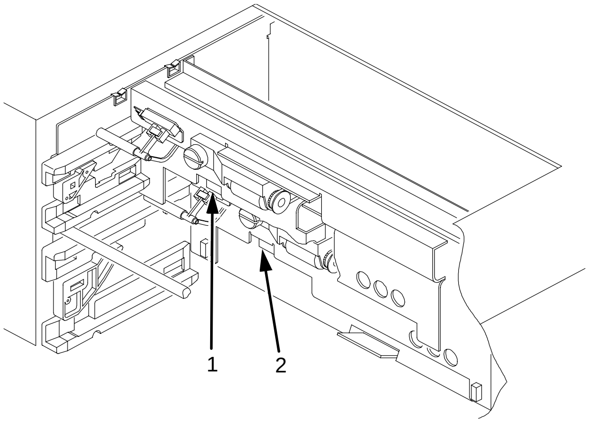

Legend:

1) Upper Reverse Roller Unit
2) Lower Reverse Roller Unit

7. There are two reverse roller units (upper and lower) located at the back of the cassette opening (underneath the upper and lower pickup roller units). On the upper reverse roller unit, loosen the green thumbscrew. Remove the roller unit by moving it downward while sliding it to the left.

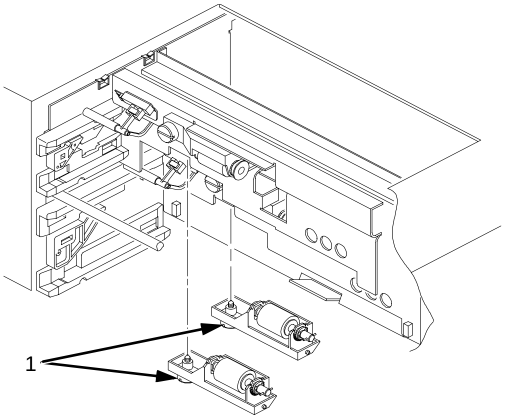

Legend:

1) Thumbscrews

8. On the lower reverse roller unit, loosen the green thumbscrew. Remove the roller unit by moving it downward while sliding it to the left.
9. Wipe off the dirt on the reverse rollers with a Toraysee cloth (listed on page 78). Remove any label adhesive or forms residue with rubbing alcohol.

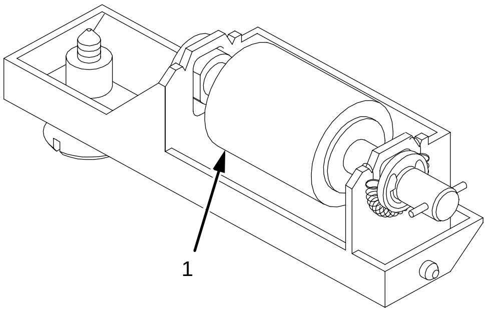

Legend:

1) Roller

10. Install the upper and lower reverse roller units:
    - a. Align the shaft pin with the slot in the coupling, and align the alignment pin on the unit with the hole in the frame.
    - b. Tighten the green thumbscrew.

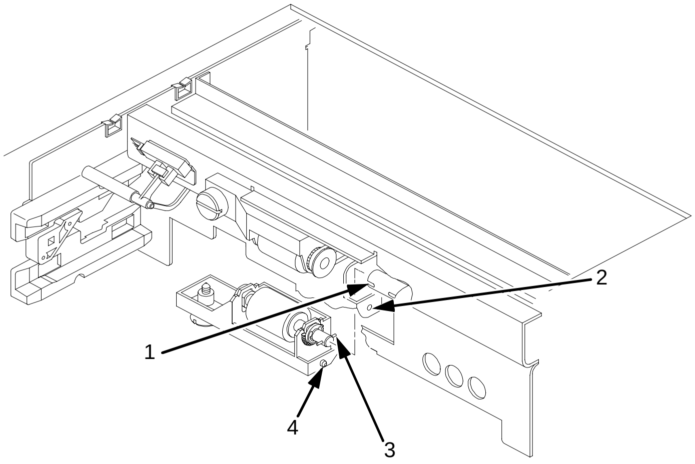

Legend:

1) Coupling
2) Hole In The Frame
3) Shaft Pin
4) Alignment Pin

11. Install the upper and lower paper cassettes into the printer.

Major Cleaning

1. Turn the power switch OFF.
2. Open the printer front upper cover. (See page 52.)

Cleaning Unit

3. Open the waste toner recovery unit by pushing downward on the lever. Pull the green handle and swing the unit outward away from the printer. (See page 60.)
4. Loosen the three thumbscrews on the upper inner cover. Then remove the cover. (See page 60.)
5. Loosen the three thumbscrews securing the drum plate and remove the drum plate.
6. Remove the cleaning unit by grasping its handle and pulling it toward you.

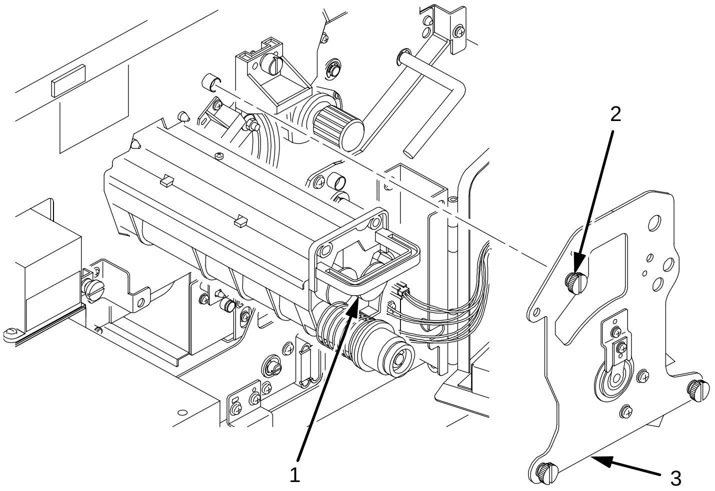

Legend:

1) Cleaning Unit Handle
2) Thumbscrews (3)
3) Drum Plate

IMPORTANT **Do not turn the cleaning unit upside down, or toner might spill.**

7. Vacuum the brush on the cleaning unit. Turn the end of the shaft to rotate the brush. Continue to rotate and vacuum the brush until the entire brush surface has been cleaned.

IMPORTANT **Do not touch the brush surface with your hand.**

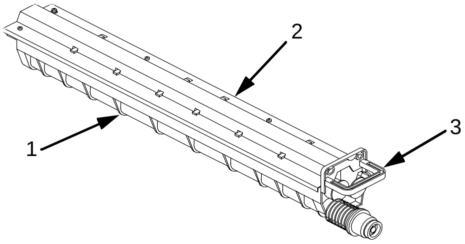

Legend:

1) Brush
2) Cleaning Unit
3) Cleaning Unit Handle

Discharge LED

CAUTION **Do not flex the discharge LED as it will break.**

8. Remove the discharge LED screw.
9. Remove the discharge LED by pulling it toward you.

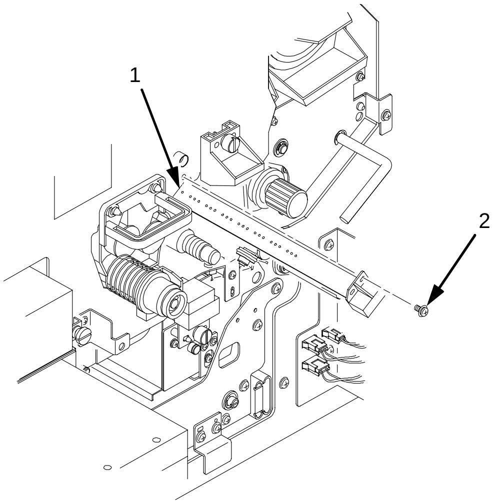

Legend:

1) Discharge LED
2) Screw

10. Using a Toraysee cloth (listed on page 78), wipe off the dirt on the discharge LED.

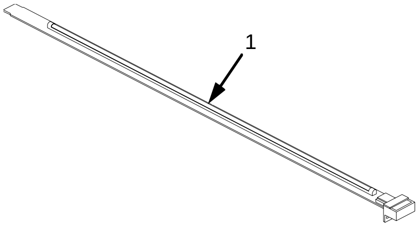

Legend:

1) Discharge LED

11. Return the discharge LED to its original position.

Photoreceptor Drum

CAUTION

When cleaning the photoreceptor drum, observe the following precautions:

- **Do not touch the drum surface with your hands.**
- **To prevent the drum surface from being scratched, clean it in a location free of dust.**
- **Cleaning the drum may result in stains. A drum left unused in the printer for a long time after cleaning may especially be affected. Therefore, after cleaning and installing the drum in the printer, use maximum size paper to print an image repeatedly until no stains remain. Stains will usually be cleared after printing a few dozen pages.**

12. Remove the photoreceptor drum from the printer. (Refer to page 60.)
13. Place the drum on a covered work surface.
14. If the drum is only slightly dirty, clean it with ethanol or isopropyl alcohol. **Do not use acetone.**

15. If the drum has toner build-up, clean it with the drum freshener pad (listed on page 78). Turn the drum little by little while polishing the drum surface with the freshener pad. Polish with a slight force in the direction of the drum axis, using a circular motion. Let the polished areas slightly overlap each other, and polish the entire drum surface two or three times.

CAUTION **Press lightly when polishing the drum surface, as too much pressure can damage the drum.**

16. Using the special dry tissue paper (listed on page 78), thoroughly wipe the drum freshener off the drum surface.
17. Wipe the drum surface again using a Toraysee cloth (listed on page 78).
18. To avoid exposing the drum to light too long, temporarily pack the drum in its original packaging material, and close the box cover. Set the drum aside for now.
19. Remove the drum auxiliary rod from the drum shaft.
20. Wipe the drum shaft clean with a cloth.

Cleaning The Developing Area

21. Loosen the thumbscrew and remove the main charger by pulling it toward you.

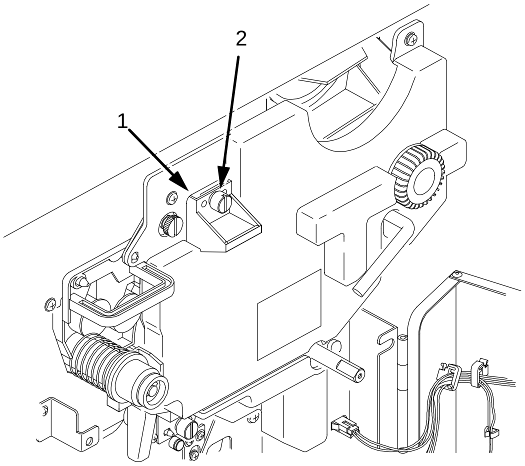

Legend:

1) Thumbscrew
2) Main Charger

22. Clean the developing unit area with a vacuum cleaner and a soft cloth.

23. Wipe the SELFOC® lens by moving a Toraysee cloth (listed on page 78) from the inner part of the printer toward you. Wipe the lens several times until there is no more dirt on the cloth.

CAUTION **When wiping the SELFOC lens, be certain not to apply excessive force to the drum surface potential sensor near the SELFOC lens, as this may dislocate the sensor. (If this happens, contact your service representative.)**

NOTE: Always wipe the SELFOC lens with the unused side of the Toraysee.

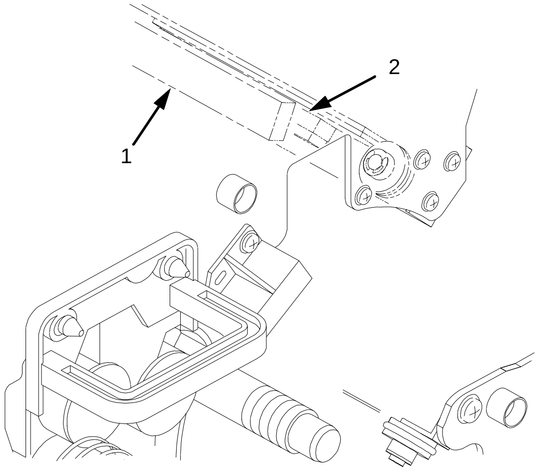

Legend:

1) SELFOC Lens
2) Drum Surface Potential Sensor

24. Install the main charger.
25. Install the cleaning unit.
26. Install the photoreceptor drum. (Refer to page 60.)
27. Install the developing unit. (Refer to page 75.)

5

Troubleshooting

Troubleshooting

This chapter discusses diagnostic tests, paper jams, and status and error messages. For cleaning procedures and schedules, refer to Chapter 4, “Scheduled Maintenance."

Diagnostics

The printer includes self-diagnostic circuits and software to aid in the discovery, prevention, and correction of system problems and failures. Printer diagnostics fall into these categories:

- Offline Diagnostics
- Online Diagnostics

Offline Diagnostics

Most of the software diagnostics are executed when the printer is powered on, and when you request diagnostic information through the control panel.

Power-on Self Test

Each time the printer is powered on, it performs a power-on self test. There is no printout during this test. However, the printer displays any errors on the control panel, accompanied by an audible alarm.

You may request the following diagnostic and configuration information via the control panel, through various menus:

- Test Print: Prints various predefined graphics pages to verify that the printer can print properly on the entire page (Test Print menu).
- Print Statistics: Displays all accumulated print engine statistics, such as number of pages printed and power-on time. This is a display-only feature; there is no printout (Print Statistics menu).
- Print Configuration: Prints all current configuration parameters in the printer, including print statistics (Config. Control menu).

Online Diagnostics

When online, the printer continues to sense and report problems or conditions as they arise. When an error is detected, the printer halts, lights the appropriate LED, and displays the proper error message on the control panel. The error message will remain displayed until the error condition is cleared and you press CLEAR.

After the error is cleared, the printer will reprint any pages that were not ejected prior to the error, provided the Reprint on Fault option is enabled. See the *User's Manual* for more detailed information.

Fanfold Paper Jams

CAUTION **Due to the high intensity of the flash fusing unit, keep the area under the fuser free of paper debris.**

NOTE: For information on removing paper and avoiding paper jams when using the optional power paper stacker, see page 43.

Paper Jam Near The Tractor

1. Raise the tractor gates.
2. Pull out the jammed paper. If the end of the paper is crumpled, tear it away from the perforation.

3. Reload the paper. The first fold of the paper should face the printer; otherwise, a paper jam could occur during printing (see illustration). Do not push the paper past the tractors into the area of the paper jam sensor.

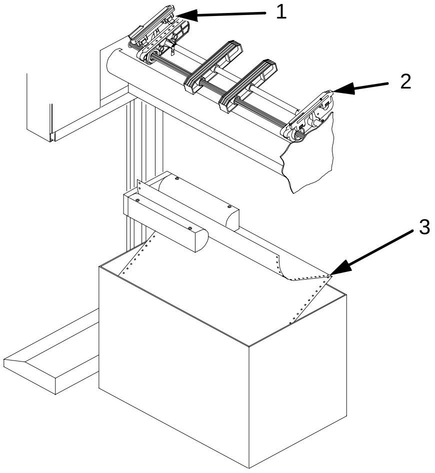

Legend:

1) Left Tractor
2) Right Tractor
3) First paper fold is toward printer.

Paper Jam Near The Paper Output Section

1. When paper motion stops, wait 15 seconds, then open the front cover.
2. Push down on the opening lever of the waste toner recovery unit, and pull the green handle to swing the unit outward away.

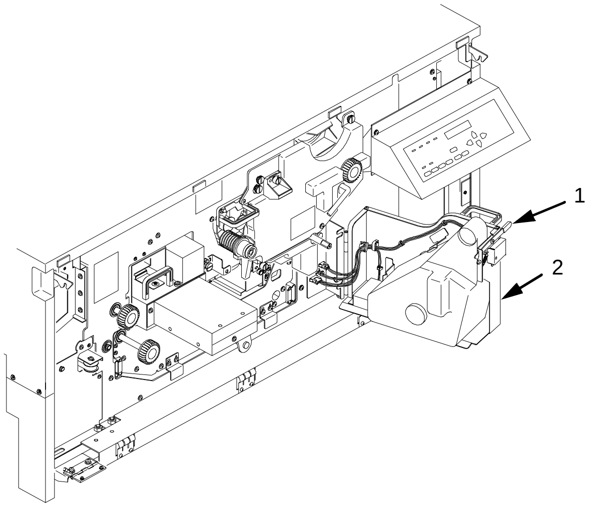

Legend:

1) Waste Toner Recovery Unit
2) Opening Lever

3. Loosen three thumbscrews on the upper inner cover.

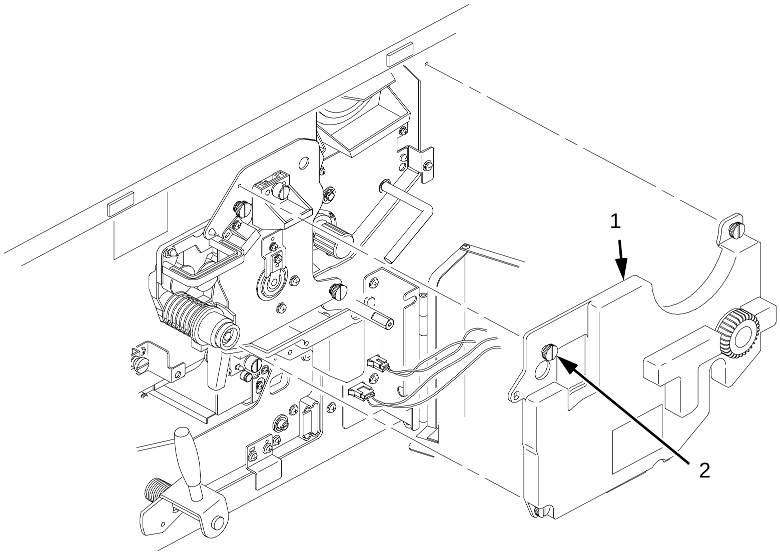

Legend:

1) Upper Inner Cover
2) Thumbscrews (3)

CAUTION **The transfer charger must be in the down position to avoid scratching the drum. Failure to perform steps 4 and 5 will damage the drum.**

4. Check that the transfer charger is in the down position, and if not, move it to the down position by rotating the transfer elevator drive shaft counterclockwise. Watch the charger movement:
    a. If the charger starts to move up, it is already in the down position.
    b. If the charger starts to move down, continue to rotate the drive shaft until the charger reaches the fully down position.

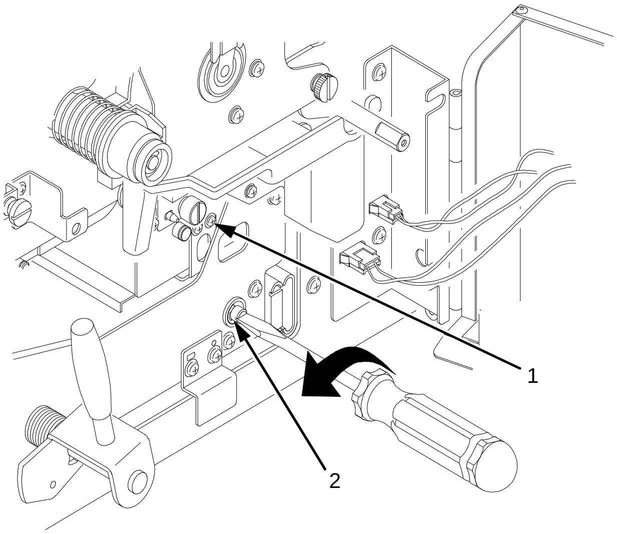

Legend:

1) Transfer Charger
2) Transfer Elevator Drive Shaft

CAUTION **To avoid damaging the printer or causing false paper jams, the transport lever must be in the fully down position before opening the transport unit.**

5. Lower the transport unit by turning the green lever on the transport unit to the left.

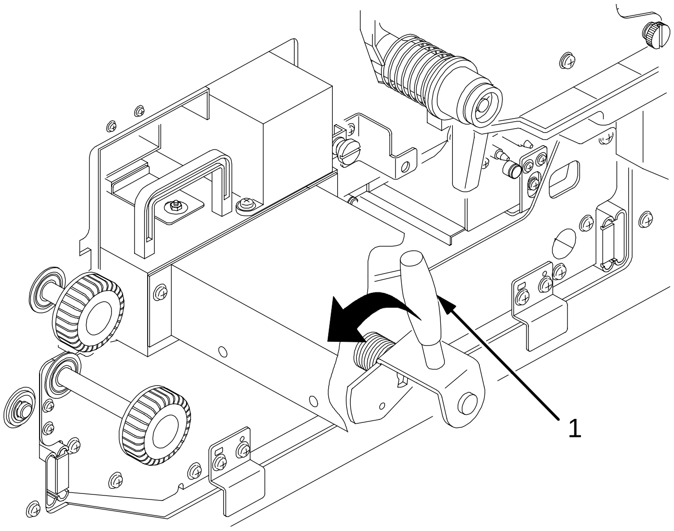

Legend:

1) Green Lever

6. Check to see if any paper is jammed.

7. To raise the scuff roller holding the paper, turn knob C clockwise 90° as shown below.

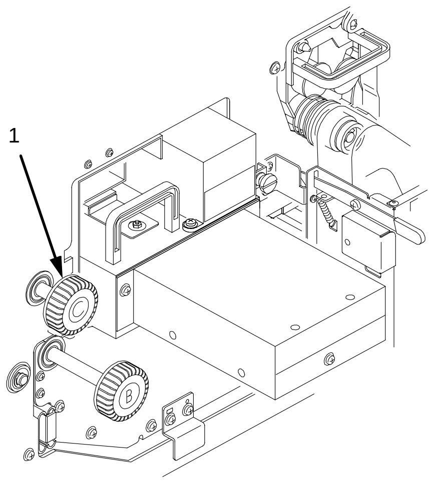

Legend:

1) Knob C

8. Separate the fanfold paper at the perforations on both the paper *input* and the *output s*ections. Then remove the jammed paper by pulling it out.

   When removing the paper from the paper *input* section, raise the tractor gates first, then pull out the jammed paper.

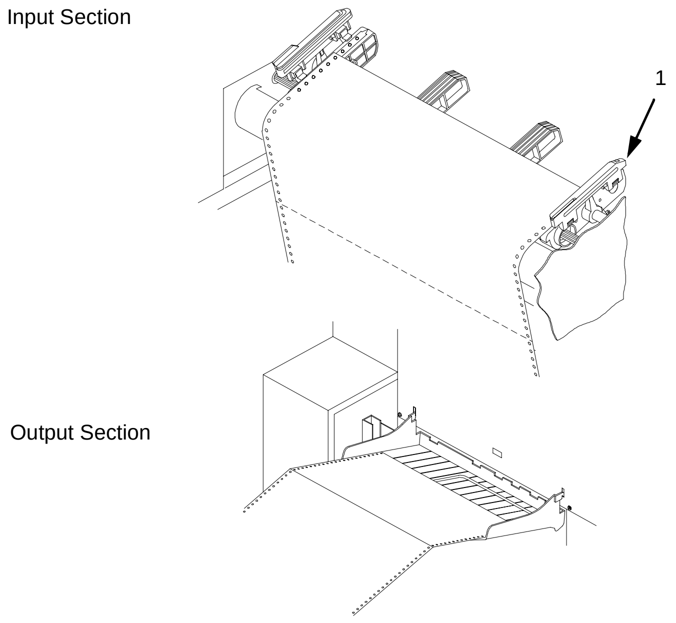

Legend:

1) Tractor Gate

CAUTION **To avoid damaging the printer or causing false paper jams, the transport lever must be in the fully down position before closing the transport unit.**

9. After removing the pieces of jammed paper, restore the transport unit, waste toner recovery unit, and knob C to their original positions, and close the upper doors.
10. Reload the paper.

Cut Sheet Paper Jams

CAUTION **Due to the high intensity of the flash fusing unit, the area under the fuser must be kept free of paper debris.**

Paper Jam At The Back Of The Paper Cassette

1. Pull out the paper cassette, then remove any jammed paper from the back of the cassette tray.

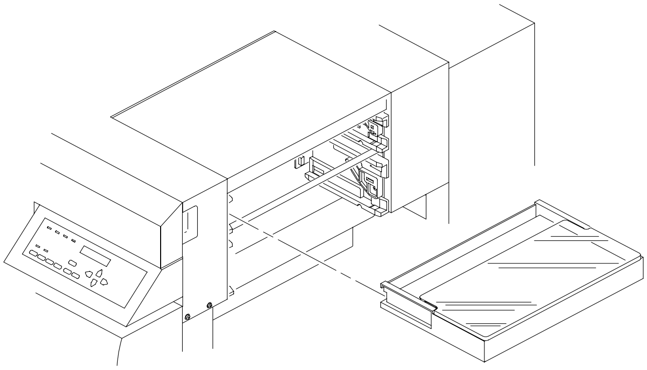

2. To lower the paper guide, pull the green lever up. Remove any jammed paper, and return the green lever to its original position.

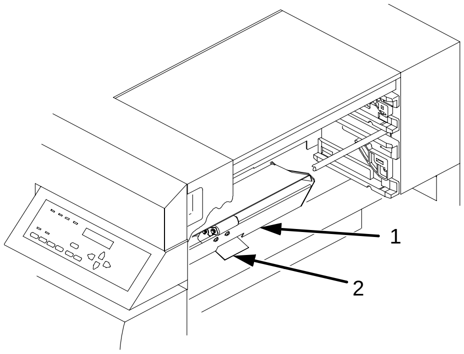

Legend:

1) Paper Guide
2) Green Lever

3. Open the lid on the top cover, and pull the green lever up. Remove any jammed paper, and return the green lever to its original position.

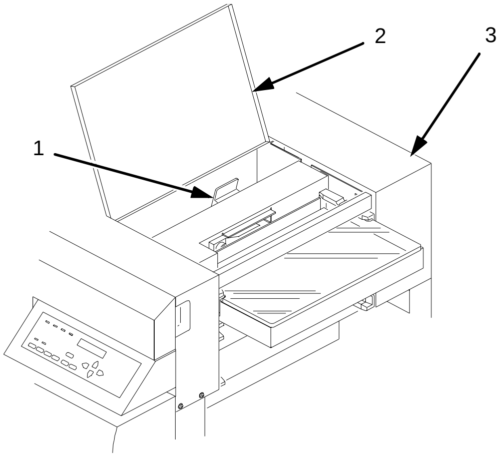

Legend:

1) Green Lever
2) Lid
3) Top Cover

Paper Jam In The Transport Input Section

1. When paper motion stops, wait 15 seconds, then open the front cover.
2. Open the waste toner recovery unit cover, and pull the unit toward you.

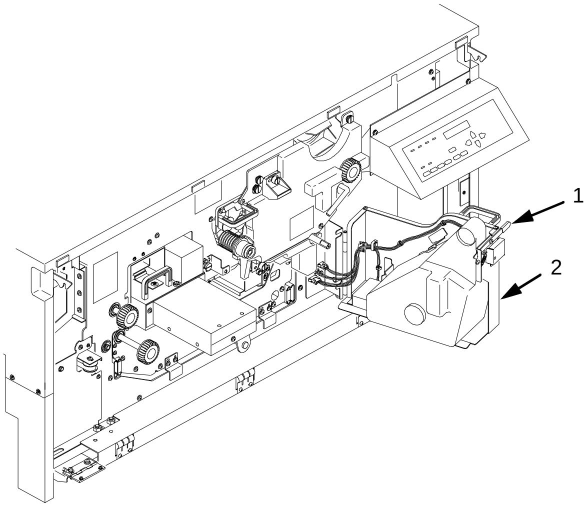

Legend:

1) Opening Lever
2) Waste Toner Recovery Unit

CAUTION **The transfer charger must be in the down position to avoid scratching the drum. Failure to perform steps 3 and 4 will damage the drum.**

3. Check that the transfer charger is in the down position, and if not, move it to the down position by rotating the transfer elevator drive shaft counterclockwise. Watch the charger movement:
    a. If the charger starts to move up, it is already in the down position.
    b. If the charger starts to move down, continue to rotate the drive shaft until the charger reaches the complete down position.

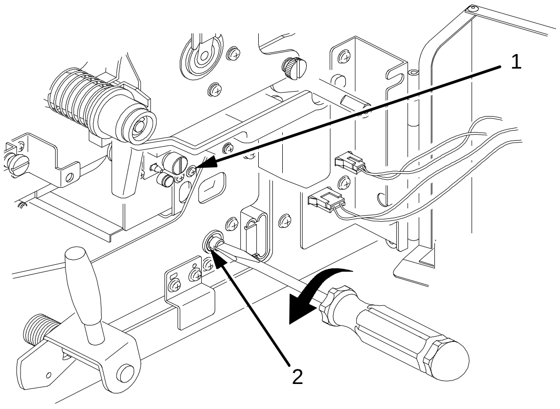

Legend:

1) Transfer Charger
2) Transfer Elevator Drive Shaft

CAUTION **To avoid damaging the printer or causing false paper jams, the transport lever must be in the fully down position before opening or closing the transport unit.**

4. To lower the transport route surface, turn the green transport unit lever to the left.

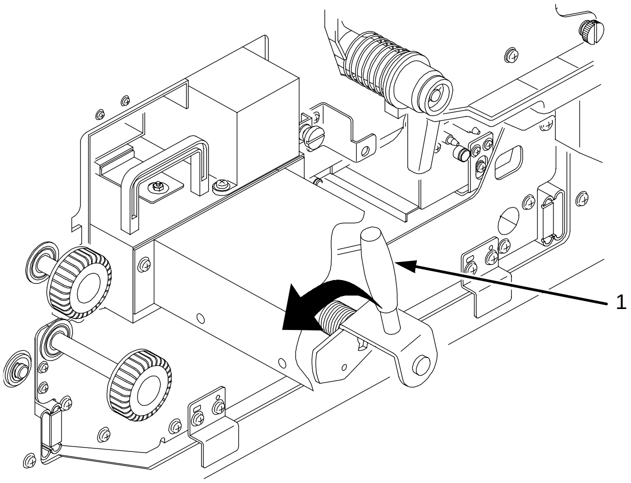

Legend:

1) Green Lever

5. Remove knob A from its place as shown below. Attach knob A to the paper feed shaft, and turn knob A counterclockwise. This causes the jammed paper to be moved to the eject side. Remove any jammed paper, and return knob A to its original position.

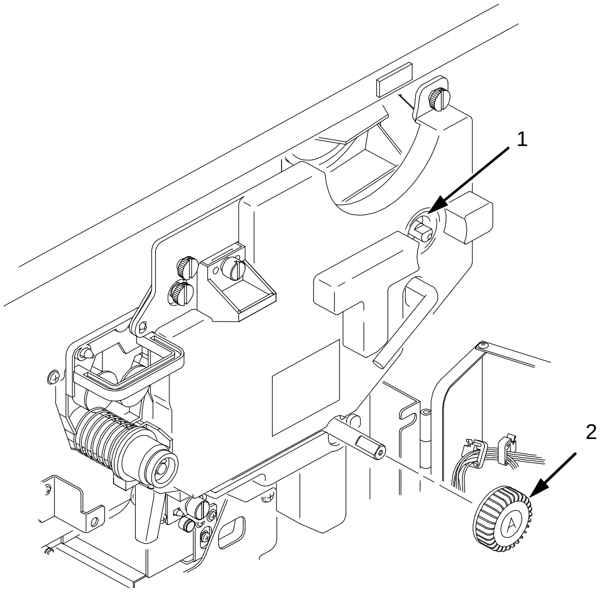

Legend:

1) Original Position of Knob A
2) Knob A

6. Restore the transport unit and the waste toner recovery unit to their original positions, and close the front cover.

Paper Jam In The Transport Output Section

1. When paper motion stops, wait 15 seconds, then open the front cover.
2. Pull up the bottom lever to raise the paper guide, and turn the green knob B counterclockwise. This causes the jammed paper to be moved to the paper feed section. Remove any jammed paper.

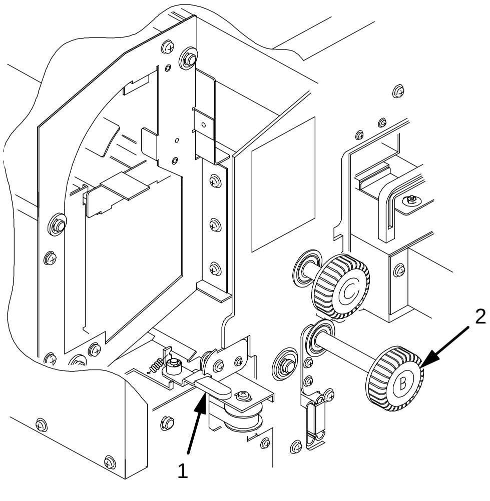

Legend:

1) Bottom Lever (#1)
2) Knob B

3. Lower the paper guide by restoring the bottom lever to its original position. Close the front cover.

Paper Jam In The Face Up Or Down Paper Path

1. When paper motion stops, wait 15 seconds, then open the front cover.
2. Push the top and middle levers down. Pull the bottom lever up to raise the paper guide. Turn the green knob C clockwise, and remove any jammed paper.

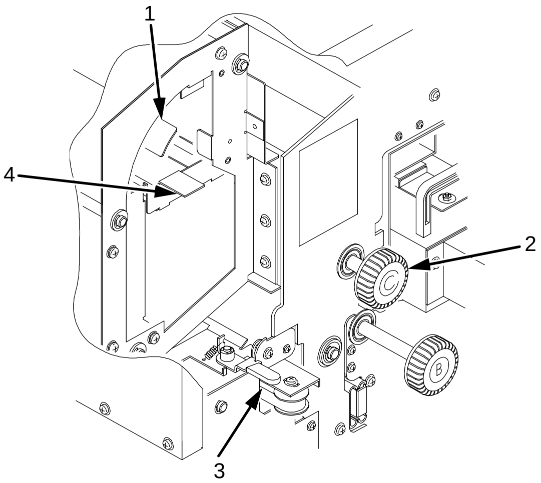

Legend:

1) Top Lever (#3)
2) Knob C
3) Bottom Lever (#1)
4) Middle Lever (#2)

3. Restore the top, middle, and bottom levers to their original positions, and close the front cover.

System Status and Error Messages

When an error occurs, the printer displays an appropriate message on the control panel LCD. Some errors are operator-correctable, some require field service, and others require reprinting.

Operator-correctable errors include paper jams, missing consumables, and power paper stacker problems. After correcting the error condition, press CLEAR to remove the message from the display and place the printer offline. If any data resides in the print buffer, it will then be printed. Press ONLINE to place the printer online.

The “stacker” errors can usually be cleared by pressing CLEAR. In some cases, you may need to lower and then raise the stacker tray, then press CLEAR to correct the error.

Errors requiring field service are printer failures that require the attention of service personnel. Before calling your service representative, press CLEAR to attempt to remove the message from the display. If the message disappears, the original message may have been a false error indication. If the message reappears, call for service.

Errors requiring reprinting are those errors which require reprinting to recover from an error condition. These are discussed in detail in the following topics.

IMPORTANT **The stacker is reset automatically whenever you clear a paper fault (paper jam or fanfold paper empty) error.**

Reprinting Pages After Fault Condition

The printer handles errors in three ways, depending on your configuration of the Reprint on Fault option in the Paper Control menu.

If Reprint on Fault is *enabled* (the default):

Any pages left in the printer at the time of failure will be reprinted. No data is lost.

Fanfold paper: the printer reprints all pages that have not completely exited the printer at the time of failure. The exact number of pages that are reprinted is determined by the length of the page and where within the page the fault occurred.

Cut sheet paper: the printer determines how many pages did not exit the printer, and reprints all pages that did not exit.

If Reprint on Fault is *disabled:*

Any pages left in the printer at the time of failure will not be reprinted. Data is lost (you will need to reprint the lost pages according to your application software.)

If Reprint on Fault is *confirm*:

The control panel on the printer returns a message asking whether or not to reprint. Answer Yes to reprint, answer No if a reprint is not necessary.

Whether Reprint on Fault is enabled, or disabled, or confirm:

After a paper jam, you may need to reload the paper onto the tractors.

“Error Messages,” on page 152, designates those errors that require reprinting to recover from an error condition.

NOTE: Some errors require reprinting, regardless of your printer configuration.

Procedure For Fault Clearing - Reprint On Fault *Disabled*

1. A fault occurs.
2. Correct the fault condition.
3. Press CLEAR.
4. The STAND BY LED blinks and the following message appears while the printer attempts to clear the fault:

```
Standby ...
Clearing Fault
```

- If the fault is not cleared:

a. The printer beeps and briefly displays the following message:

```
Faults Not Cleared
```

b. The printer then redisplays the original fault message, or any other uncleared fault message.

c. Attempt to clear the fault condition again, or contact your service representative.

- If the fault is cleared, and if you do not need to reload the paper into the tractors (for example, the printer ran out of toner):

a. The printer goes OFFLINE.

b. Press ONLINE to resume printing.

- If the fault is cleared, and if you need to reload paper into the tractors (such as after a paper jam), the following message appears:

```
Reload Paper
in Tractors
```

a. Reload the paper onto the tractors.

b. Press CLEAR.

c. Press ONLINE to resume printing. *Note that pages have been lost.*

- If the fault is cleared, and if you already have reloaded the paper while clearing the fault condition (in Step 2), the following message appears:

```
Not Reprinting
Failed Pages
```

5. Press ONLINE to resume printing. Note that pages have been lost.

IMPORTANT **If Reprint on Fault is disabled and an error occurs, and if either the “Reload Paper in Tractors” or “Not Reprinting Failed Pages” message appears, then any pages removed from the printer will not be reprinted, and the data on them will be lost.**

Procedure For Fault Clearing - Reprint On Fault *Enabled*

1. A fault occurs.
2. Correct the fault condition.
3. Press CLEAR.
4. The STAND BY LED blinks and the following message appears while the printer attempts to clear fault:

```
Standby ...
Clearing Fault
```

- If the fault is not cleared:
  a. The printer beeps and briefly displays the following message:

```
Faults Not Cleared
```

  b. The printer then redisplays the original fault message, or any other uncleared fault message.
  c. Attempt to clear the fault condition again, or contact your service representative.
- If the fault is cleared, and if you do *not* need to reload the paper into the tractors (for example, the printer ran out of toner):
  a. The printer goes OFFLINE.
  b. Press ONLINE to resume printing.

- If the fault is cleared, and if you need to reload paper into the tractors (such as after a paper jam), the following message appears:

  ```
  Clear Paper Path
  for Reprint
  ```

  a. Reload the paper onto the tractors.
  b. Press CLEAR. The printer reprints only the pages affected by the fault (even though the message display reads “OFFLINE”).
  c. Press ONLINE to resume printing.

- If the fault is cleared, and if you already have reloaded the paper while clearing the fault condition (in Step 2), the following message appears:

  ```
  Reprinting
  Failed Pages
  ```

  a. The printer reprints only the pages affected by the fault.
  b. Press ONLINE to resume printing.

Error Messages

“Error Messages,” on page 152, lists errors by error code and shows which are operator-correctable, which require field service, and which require reprinting.

- *Operator-correctable errors* include paper jams, missing consumables, and power paper stacker problems.
- *Errors requiring field service* are printer failures that require the attention of service personnel.
- *Errors requiring reprinting* are those errors which require reprinting to recover from an error condition.

NOTE: The letter designations (A-D) following the “PAPER JAM” error messages match the sensor positions indicated on the control panel, as shown in the following illustration.

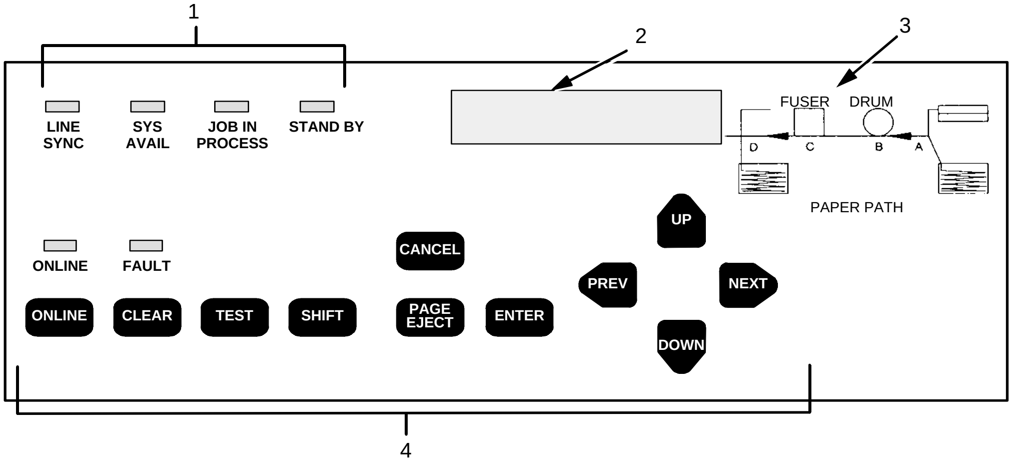

1
2
3
LINE SYNC
SYS AVAIL
JOB IN PROCESS
STAND BY
FUSER
DRUM
D
C
B
A
PAPER PATH
UP
ONLINE
FAULT
CANCEL
PREV
NEXT
ONLINE
CLEAR
TEST
SHIFT
PAGE EJECT
ENTER
DOWN
4

Legend:

1) Status Indicators
2) Liquid Crystal Display (LCD)
3) Sensor Positions A - D
4) Function Keys

Table 1. Error Messages.

Error Code	Error Message	Operator Correctable	Field Service Required	Reprint Required
01	FRONT COVER OPEN	✓		See Note 3 and 6
08	CUT-SHEET PATH OPEN			
6C	CUT-SHEET COVER OPEN			
02	FANFOLD PAPER EMPTY	✓		See Note 4
66	NO PAPER TRAY	✓		✓
6F	CUT SHEET PAPER EMPTY	✓		✓
03	PAPER JAM AT FUSER (C)	✓		✓
04	PAPER JAM AT EXIT (D)	✓		✓
05	PAPER JAM AT EXIT (D)	✓		✓
0E	PAPER JAM AT EXIT (D)	✓		✓
0F	PAPER JAM AT EXIT (D)	✓		✓
10	PAPER JAM AT EXIT (D)	✓		✓
11	PAPER JAM AT DRUM (B)	✓		✓
12	PAPER JAM AT FUSER (C)	✓		✓
13	PAPER JAM AT EXIT (D)	✓		✓
16	PAPER JAM AT ENTRANCE (A)	✓		✓
1B	PAPER JAM AT ENTRANCE (A)	✓		✓
64	PAPER JAM AT ENTRANCE (A)	✓		✓
65	CUT SHEET PICK MISS		✓	✓
67	PAPER JAM AT ENTRANCE (A)	✓		✓

Error Code	Error Message	Operator Correctable	Field Service Required	Reprint Required
68	PAPER JAM AT ENTRANCE (A)	✓		✓
69	PAPER JAM AT ENTRANCE (A)	✓		✓
6A	PAPER JAM AT ENTRANCE (A)	✓		✓
6B	PAPER JAM AT ENTRANCE (A)	✓		✓
73	PAPER JAM AT ENTRANCE (A)	✓		✓
09	TRANSPORT MOTOR FAIL		✓	✓
14	TRACTOR MTR FWD SPEED ERR		✓	✓
15	TRACTOR MTR BKWD SPEED ERR		✓	✓
0A	CUTTER FAIL		✓	
0B	CUTTER FAIL		✓	
18	DRUM MOTOR FAIL		✓	
19	SURFACE VOLTAGE TOO HIGH		✓	
1A	SURFACE VOLTAGE TOO HIGH		✓	
1D	SURFACE VOLTAGE FAIL		✓	
18	DRUM MOTOR FAIL			
1E	FUSER SUPPLY FAIL		✓	
1F	FUSER FAILURE		✓	
20	FUSER LAMP OVERHEAT		✓	
21	FUSER FAN FAIL		✓	
22	EXHAUST FAN FAIL			
26	NO CLEANING UNIT	✓		
27	NO DEVELOPER UNIT			
28	WASTE TONER FULL	✓		

Error Code	Error Message	Operator Correctable	Field Service Required	Reprint Required
29	NO WASTE TONER BOX	✓		
2A	TONER LOW	See Note 5		
2B	TONER DENSITY TOO HIGH		✓	
2C	TONER DENSITY TOO LOW		✓	
2D	TONER EMPTY	✓		
2E	DEVELOPER MOTOR FAIL			
32	LED HEAD OVERHEAT		✓	
36	LED FAIL		✓	
37	LED FAIL		✓	
38	ENGINE CPU FAIL		✓	
39	ENGINE CPU FAIL		✓	
3A	ENGINE CPU FAIL		✓	
3B	ENGINE CPU FAIL		✓	
3C	ENGINE CPU FAIL		✓	
3D	ENGINE CPU FAIL		✓	
3E	ENGINE CPU FAIL		✓	
3F	ENGINE CPU FAIL		✓	
40	ENGINE CPU FAIL		✓	
41	ENGINE CPU FAIL		✓	
42	ENGINE CPU FAIL		✓	
43	ENGINE CPU FAIL		✓	
44	ENGINE CPU FAIL		✓	
45	ENGINE CPU FAIL		✓	
46	ENGINE CPU FAIL		✓	

Error Code	Error Message	Operator Correctable	Field Service Required	Reprint Required
47	ENGINE CPU FAIL		✓	
72	ENGINE CPU FAIL		✓	
48	CONTROLLER COMM. FAIL		✓	
49	CONTROLLER COMM. FAIL		✓	
4A	CONTROLLER COMM. FAIL		✓	
4B	CONTROLLER COMM. FAIL		✓	
4C	CONTROLLER COMM. FAIL		✓	
4D	CONTROLLER COMM. FAIL		✓	
4E	CONTROLLER COMM. FAIL			
50	STACKER FAIL		✓	
51	STACKER FAIL		✓	
52	STACKER FAIL		✓	
53	STACKER FAIL		✓	
54	STACKER INTERLOCK FAIL		✓	
55	STACKER FAIL		✓	
57	STACKER NOT READY	✓		
58	STACKER NOT READY	✓		✓
5A	STACKER FAIL		✓	
5B	STACKER FAIL		✓	
5C	STACKER NOT READY	✓		✓
56	STACKER FULL			
06	NO TRANSFER UNIT		✓	✓
0C	TRANSFER PLATFORM FAIL		✓	✓
0D	TRANSFER PLATFORM FAIL		✓	✓

Error Code	Error Message	Operator Correctable	Field Service Required	Reprint Required
07	SCUFF LEVER OPEN	✓		
78	MAIN CHARGER ERROR		✓	✓
79	TRANSFER CHARGER ERROR		✓	✓
7A	PRE-CHARGER ERROR		✓	✓
7B	CLEANING BIAS ERROR		✓	✓
7C	DEVELOPING BIAS ERROR		✓	✓
7D	SEPARATOR CHARGER ERROR		✓	✓
	TRAY MISMATCH	✓		
5D	STACKER FAIL		✓	
5E	STACKER FAIL		✓	
5F	STACKER FAIL		✓	
	FILE SYS FULL DELETE FILES	✓		✓
	FILE SYS FULL OPTIMIZE&REBOOT	✓		✓
	FILE SYS FULL ADD FLASH	✓		✓
	INSUFFICIENT RAM REBOOT/ADD RAM	✓		✓
	FILE EXISTS ENABLE OVERWRITE	✓		✓
	FILE SYS INVALID OPTIMIZE&REBOOT	✓		✓
	FILE SYS WRITE CHECK FLASH	✓		✓

Error Code	Error Message	Operator Correctable	Field Service Required	Reprint Required
	RELOAD PAPER PIN TRACTORS	✓		✓
	CLEAR PAPER PATH FOR REPRINT	✓		✓
	FRAMING ERROR		✓	✓
	PARITY ERROR		✓	✓
	BUFFER OVERRUN		✓	✓
	BUFFER OVERFLOW		✓	✓

TABLE NOTES:

1. For *any* error with Reprint on Fault enabled: If the printer stops while in the middle of printing a page, reloading the paper and reprinting are required. There may be other cases requiring reloading and reprinting; if so, a message will appear.
2. For *any* error with Reprint on Fault disabled: If the printer stops while in the middle of printing a page, reloading the paper is required and pages are lost.
3. For error numbers 01, 14, and 15: If the error occurs while paper is *not* moving, it is not necessary to reload or reprint.
4. For error number 02: If the error is caused by a paper-empty at the lower sensor (Paper Near End Sensor), it is not necessary to reprint.
5. Status message only. No operator action required to clear message.

The Front Cover Open error can occur when either the Upper Doors or the Paper Output Door (as seen on the previous page) is open. If the Upper Doors are closed, push the Paper Output Door in to release it to its down position.

Chapter 5 System Status and Error Messages

A Maintenance Log Sheets

Maintenance Log Sheets

The maintenance log sheets are for your use. These may be photocopied and kept in a binder near the printer. Be sure to use them each time either you or your service provider perform printer maintenance.

Only maintenance levels A through C are presented in this *Operator's Guide.* These three levels are done by the user. Levels D through H are done by a service representative and are included in the *User's Manual.*

Level A Maintenance - 15,000 Pages (User)

Action	Item	Part #	Performed By	Date
Clean	General cleaning	N/A		
Clean	Main charger	705741-001		
Clean	Precharger	705742-001		
Clean	Transfer charger	705743-001		
Clean See Note 1	Cover glass	N/A		
Replace See Note 2	Toner cartridge	703532-050		
Note 1: Every 15,000 pages or 6 paper jams, whichever occurs first. Note 2: The Toner cartridge should be replaced about every 21,000 pages or as needed (for page coverage of 4%)				

Level B Maintenance - 150,000 Pages (User)

Action	Item	Part #	Performed By	Date
Clean	General cleaning	N/A		
Clean	Main charger	705741-001		
Clean	Precharger	705742-001		
Clean	Transfer charger	705743-001		
Clean See Note 1	Cover glass	N/A		
Clean	SELFOC lens	N/A		
Vacuum	Lamp housing filter	202985-001		
Vacuum	Cleaning unit	705740-001		
See Note 2	Photoreceptor drum	703535-001		
Replace See Note 3	Toner cartridge	703532-001		
Replace	Developer	703548-001		
Replace See Note 4	Waste toner bottle	202984-001		
Note 1: Every 15,000 pages or 6 paper jams, whichever occurs first. Note 2: Inspect every 150,000 pages; clean if needed. Replace at 300,000 pages or sooner if print quality is no longer acceptable. Drum life is dependent upon media being used and proper maintenance and operation of the printer. Print media other than bond paper (e.g., labels, card stock, plastic, or vinyl) may reduce drum life as much as 50%. Note 3: The Toner cartridge should be replaced about every 21,000 pages or as needed (for page coverage of 4%). Note 4: The waste toner bottle is replaced every 90,000 pages, so may not need to be replaced at this time.				

Level C Maintenance - 600,000 Pages (User)

Action	Item	Part #	Performed By	Date
Clean	General cleaning	N/A		
Clean See Note 1	Cover glass	N/A		
Clean	SELFOC lens	N/A		
Clean	Flash power supply filter	N/A		
See Note 2	Photoreceptor drum	703535-001		
Replace	Developing Unit	705739-001		
Replace See Note 3	Toner cartridge	703532-001		
Replace	Waste toner bottle	202984-001		

Note 1: Every 15,000 pages or 6 paper jams, whichever occurs first.

Note 2: Inspect every 150,000 pages; clean if needed. Replace at 300,000 pages or sooner if print quality is no longer acceptable. Drum life is dependent upon media being used and proper maintenance and operation of the printer. Print media other than bond paper (e.g., labels, card stock, plastic, or vinyl) may reduce drum life as much as 50%.
Note 3: The Toner cartridge should be replaced about every 10,000 pages or as needed (for page coverage of 4%).

B Specifications

Paper Specifications

Paper type	Fanfold
Paper size	
Width	7 to 16 inches
Length*	1 to 30 inches, in multiples of 1/6 inch.

* Measured from main folding/cutting perforation to main folding/cutting perforation.

Tractor pin holes	See the table and figure below.

Specification	Inch	Millimeter	Dimension in Figure
Pin hole center to folding perforation	1/6, 1/4, 1/3, or 1/2	4.23, 6.35, 8.47, 1.20	8
Hole center line to edge of form	0.236 ± 0.028	6.0 ±0.1	1
Hole diameter	0.156 ± 0.004	4.0 ±0.1	N/A
Distance between centers of two consecutive holes	0.500 ± 0.002	12.7 ±0.05	5
Max. deviation of holes from their center line	0.004	0.1	6
Max. deviation Left Hand hole to companion Right Hand hole (Center Line to Center Line)	0.006	0.15	4
Max. parallel deviation Left Hand hole Center Line to Right Hand hole Center Line	0.006	0.15	N/A

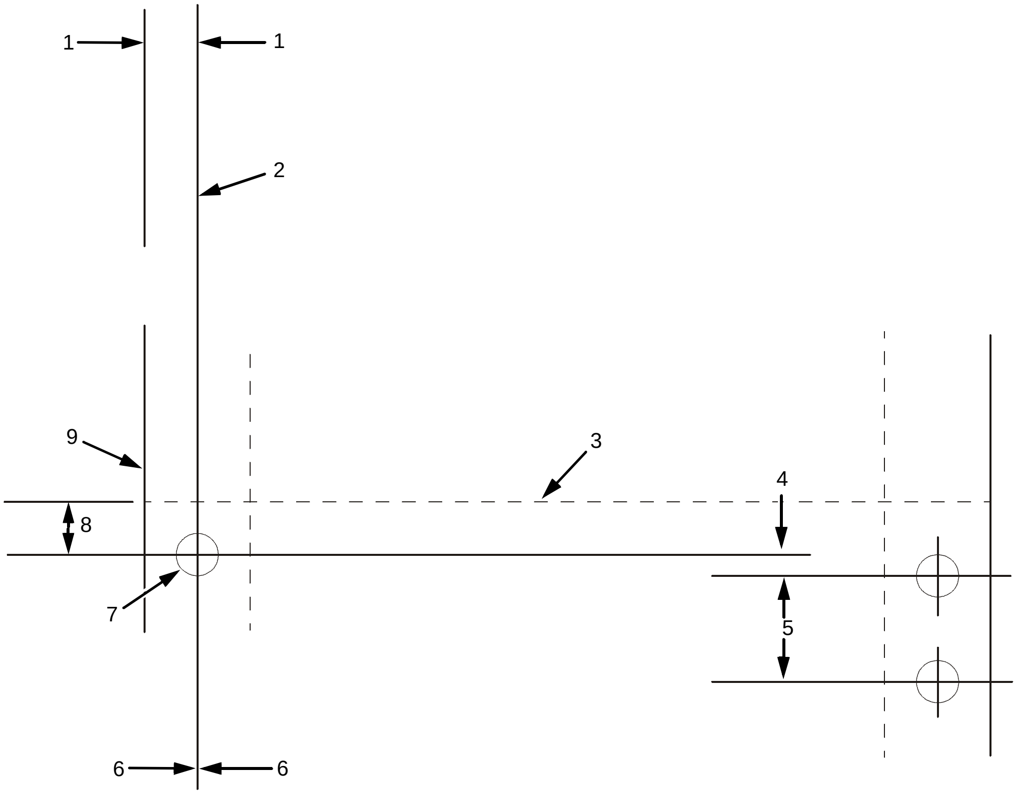

Legend:

1) Hole centerline to edge of form
2) Center Line
3) Main Folding/Cutting Perforation
4) Centerline to Centerline
5) Distance between centers of two consecutive holes
6) Center Line Deviation
7) Tractor Pin Hole
8) Pin hole to perforation
9) Fanfold Paper

Paper thickness	.010 inch maximum
Paper weight	18 to 44 lb. bond (68-165g/m^2), 44-125 lb. tag/label (75-204g/m^2)
Paper feed	Automatic paper parking mechanism incorporated
Maximum paper stack size	3000 sheets (18 lb.)
Folder Perforation	
Cut	0.12 inches or 3mm minimum
Cut to Tie	3:1 minimum

Performance Characteristics

Printing density	300 x 300 dpi 400 x 400 dpi or 240 x 240 dpi (options)
Printing speed	2.78 inches per second.

Paper Size	Orientation	Printing Speeds (Pages per Minute)
A4	Landscape	20
Letter	Landscape	20
A4	Portrait	15
Letter	Portrait	15

Maximum effective print width	14.7 inches

Duty cycle	200,000 total pages/month of fanfold paper (11-in. length)
Mechanical life	5 years or 12,000,000 pages (11-inch length)
Warm-up time	60 sec. max.
First page printing time	25 sec. max.
MTBF/MPBF	8,000 hours/2,880,000 pages (letter size) 25% print to power on ratio
MTTR	2 hour max. (unit exchange

Host Interfaces

Standard	Centronics parallel, Dataproducts parallel, serial RS-232/422

NOTE: Dataproducts parallel interface requires an adapter cable.

Optional	Coax/Twinax Ethernet network adaptor

Emulations

Standard	LinePrinter Plus
Optional	PCL5/LP+ PCL5/PGL PCL5/VGL IGP/VGL IGP/PGL IPDS CTHI (if installed)

Memory Requirements

The L5000 series printers have 32 MB (standard) or 64 MB (optional) of RAM (Random Access Memory), and 8 MB (standard) or 16, 32, or 64 (optional) of Flash Memory. This is standard with all new printer shipments, and all upgraded printers.

Safety Regulations

UL	1950
CSA	950
EUROPE	EN 60950

Electromagnetic Interference

FCC	Class A
Europe	EN55022 Class A

Physical Characteristics and Environment

Dimensions (H x W x D)	49 inch H x 30 inch W x 34 inch D
	In crate: 36 inches H x 58 inches W x 61 inches D
Weight	353 lbs. (or 441 lbs.) with options
Input voltage range	200 - 240 V ±10% 50/60 Hz (47 - 62 Hz) single phase
Power consumption	3300 W (operating); wall outlet *must* be on a 30-amp breaker.

Environment

Temperature	Operating: 50° to 80° F (10° to 27° C)
	Non-operating: 14° to 95° F(-10° to 35° C)
Humidity	Operating: 30 to 80% RH Non-operating: 10 to 80% RH (non-condensing)

Maximum Temperature/
Humidity Limits

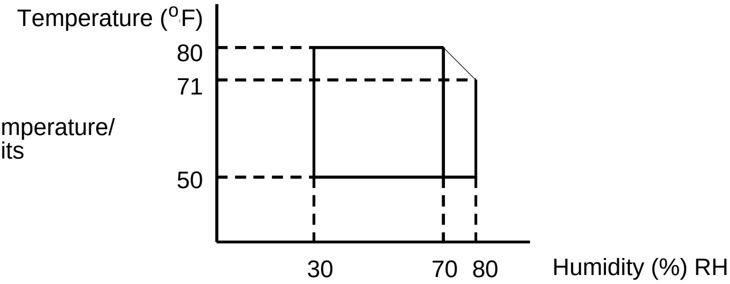

Sound level

Operating	60 db (A-weighted) max. Full options
Standby state	50 dB (A-weighted)
Inclination	1° max.

Index

A

AUTO
  function key, 41

B

Buttons See Function keys, 45

C

CANCEL
  function key, 49
Cassette
  paper jams at back of, 138
Cassette paper size
  changing, 34
Caution notice, 17
Changing cassette paper size, 34
Charger
  main cleaning, 104
Cleaning
  cleaning unit, 121
  discharge LED, 123
  fuser unit cover glass, 110
  general, 95
  main charger, 104
  photoreceptor drum, 124
  pickup rollers, 115
  reverse rollers, 118
Cleaning unit
  cleaning, 121
CLEAR
  function key, 48
Clearing faults procedure
  with Reprint on Fault disabled, 147
  with Reprint on Fault enabled, 149
Clearing service level messages, 80
Control panel
  using, 45
Cover glass
  fuser unit cleaning, 110
Custom tray width, 36
Cut sheet paper
  loading, 31
Cut sheet paper jams, 138
Cut sheet tray linking, 35

D

Danger notice, 17
Developer replacing, 69
Developing unit
  replacing, 73
Developing unit recharging
  See Developer, replacing, 69
Developing unit replacing, 69
Diagnostics
  printer, 129
  printer offline, 129
Diagnostics printer
  online, 130

Index

Diagrams
    paper path, 45
Discharge LED
    cleaning, 123
Disk drives
    location, 38
Disposal
    photoreceptor drum, 68
DOWN
    function key, 41, 50
Drum
    photoreceptor cleaning, 124
Drum photoreceptor
    disposal, 68

E

Electromagnetic interference
    specifications, 168
Emulation specifications, 168
Emulations, 25
ENTER
    function key, 49
Environmental specifications, 169
Error messages, 146
    TRAY MISMATCH error, 36
Error messages table, 151
Errors
    operator-correctable, 146
    requiring field service, 146
    requiring reprinting, 146
Errors requiring field service, 146
Errors requiring reprinting, 146

F

Face up or down paper path
    paper jams in, 145
Fanfold paper
    loading, 28
Fanfold paper jams, 130
FAULT
    status lamp, 46
Fault clearing procedure
    with Reprint on Fault disabled, 147
    with Reprint on Fault enabled, 149
Fault condition
    reprinting pages after, 146
Fault messages table, 151
Field service
    errors requiring, 146
Fonts, 26
Forms, 26
Front panel See Control panel, 45
Function keys
    AUTO, 41
    CANCEL, 49
    CLEAR, 48
    DOWN, 41, 50
    ENTER, 49
    HEAVY, 41
    NEXT, 50
    ONLINE, 47
    PAGE EJECT, 48
    PREV, 50
    SHIFT, 48
    STOP, 41

    TEST, 48
    UP, 50
Fuser unit cover glass
    cleaning, 110

G

Glass cover
    fuser unit cleaning, 110

H

HEAVY
    function key, 41
Host interface specifications, 167

I

IGP / PGL Emulation, 25
IGP / VGL Emulation, 25
Impact Printer Emulation, 25
Important notice, 17
Intervals replacement
    service provider responsibility, 92

J

Jams
    paper at back of paper cassette, 138
    paper cut sheet, 138
    paper fanfold, 130
    paper in face up or down paper path, 145
    paper in transport output section, 144
    paper near paper output section, 132
    paper near tractor, 130
JOB IN PROCESS
    status lamp, 46

K

Keys
    function, 45
Keys See Function keys, 45

L

LCD See Liquid crystal display, 45
LED discharge
    cleaning, 123
LINE SYNC
    status lamp, 45
LinePrinter Plus emulation, 25
Linking
    Cut sheet tray, 35
Liquid crystal display (LCD), 45
Loading cut sheet paper, 31
Loading fanfold paper, 28
Loading paper, 28
Location
    disk drives, 38
    power switch, 38
Log sheets
    maintenance
    level E, 86
    level F, 87
    level G, 88
    level H, 89
    maintenance level A, 82
    maintenance level B, 83
    maintenance level C, 84
Log sheets maintenance
    level A, 160

Index

M

Main charger
  cleaning, 104
Maintaining print quality, 77
Maintenance log sheets
  level A, 82, 160
  level B, 83
  level C, 84
  level E, 86
Maintenance schedules, 81
Manual conventions, 18
Memory requirements, 168
Message display See Liquid crystal display, 45
Message table
  error messages, 151
Messages
  error, 146
  service level clearing, 80
  system status, 146

N

NEXT
  function key, 50

O

ONLINE
  function key, 47
  status lamp, 46
Operator-correctable errors, 146
Operator’s panel See Control panel, 45
Output section
  transport paper jams in, 144

P

Page counts
  service level, 79
PAGE EJECT
  function key, 48
Page length
  stacker setting, 42
Pages
  reprinting after fault, 146
Paper
  loading, 28
  cut sheet, 31
  fanfold, 28
Paper cassette
  paper jams at back of, 138
Paper jams
  at back of paper cassette, 138
  cut sheet, 138
  fanfold, 130
  in face up or down paper path, 145
  in transport output section, 144
  near paper output section, 132
  near tractor, 130
Paper output section
  paper jams near, 132
Paper path
  face up or down
  paper jams in, 145
Paper path diagram, 45

Paper size
  cassette changing, 34
Paper specifications, 163
Paper stacker
  power, 39
PCL5 Emulation, 25
Performance specifications, 166
PhoenixPage PCL5 Emulation, 25
Photoreceptor drum
  cleaning, 124
  disposal, 68
Physical characteristics, 169
Pickup rollers
  cleaning, 115
Power paper stacker, 39
Power switch
  location, 38
Power-on self test, 129
PREV
  function key, 50
Print quality
  maintaining, 77
  problems, 77
Print quality problems, 77
Printer
  emulations, 25
  general information, 25
Printer diagnostics, 129
  offline, 129
  online, 130
Printer specifications
  electromagnetic interference, 168
  emulations, 168
  environment, 169
  host interfaces, 167
  memory requirements, 168
  paper, 163
  performance, 166
  physical, 169
  safety regulations, 169
Printronix LinePrinter Plus emulation, 25

Q

Quality print
  maintaining, 77
  problems with, 77

R

Recharging developing unit
  See Replacing, developer, 69
Recommended vacuum cleaners, 78
Replacement intervals
  service provider responsibility, 92
Replacement schedule
  service provider responsibility, 92
Replacing
  developing unit, 69, 73
Replacing developer, 69
Reprint on Fault
  enabled fault clearing procedure, 149
Reprint on Fault disabled
  fault clearing procedure, 147
Reprinting
  errors requiring, 146
Reprinting pages after fault, 146

- Reverse rollers
  - cleaning, 118
- Rollers
  - pickup cleaning, 115
  - reverse cleaning, 118

S

- Safety
  - notices, 17
- Safety regulations, 169
- Schedule replacement
  - service provider responsibility, 92
- Schedules
  - maintenance, 81
- Self test
  - power-on, 129
- Service levels
  - messages clearing, 80
- Setting cassette paper size, 34
- SHIFT
  - function key, 48
- Specifications printer
  - electromagnetic interference, 168
  - emulations, 168
  - environment, 169
  - host interfaces, 167
  - memory requirements, 168
  - paper, 163
  - performance, 166
  - physical, 169
  - safety regulations, 169
- Stacker
  - power paper, 39
- Stacker full
  - operator procedure, 44
- Stacker page length
  - setting, 42
- STAND BY
  - status lamp, 46
- Status lamps, 45
  - FAULT, 46
  - JOB IN PROCESS, 46
  - LINE SYNC, 45
  - ONLINE, 46
  - STAND BY, 46
  - SYS AVAIL, 46
- STOP
  - function key, 41
- Switches See Function keys, 45
- SYS AVAIL
  - status lamp, 46
- System status messages, 146

T

- TEST
  - function key, 48
- Test self
  - power-on, 129
- Tractor
  - paper jams near, 130
- Transport output section
  - paper jams in, 144
- Tray linking
  - cut sheet, 35
- TRAY MISMATCH error, 36

Tray width
    custom, 36

U

UP
    function key, 50

V

Vacuum cleaners
    recommended, 78

Index

PRINTRONIX, INC.
14600 Myford Road
P.O. Box 19559
Irvine, CA 92623-9559
Phone: (714) 368-2300
Fax: (714) 368-2600
Technical Support: (714) 368-2686

PRINTRONIX
Nederland BV
P.O. Box 163, Nieuweweg 283
NL-6600 AD Wijchen
The Netherlands
Phone: (31) 24 6489489
Fax: (31) 24 6489499

PRINTRONIX Schweiz GmbH
42 Changi South Street 1
Changi South Industrial Estate
Singapore 486763
Phone: (65) 542-0110
Fax (65) 543-0220

Visit our website at:
www.printronix.com

Free Manuals Download Website

http://myh66.com

http://usermanuals.us

http://www.somanuals.com

http://www.4manuals.cc

http://www.manual-lib.com

http://www.404manual.com

http://www.luxmanual.com

http://aubethermostatmanual.com

Golf course search by state

http://golfingnear.com

Email search by domain

http://emailbydomain.com

Auto manuals search

http://auto.somanuals.com

TV manuals search

http://tv.somanuals.com