PARTS LIST NO. 530164151		WEED EATER® PARTS LIST	MODEL(s) Featherlite SST25
DATE 3/04/09	Replaces 530164151 – 6/06/08	**Note:** Illustration may differ from actual model due to design changes	PAGE NO. 1

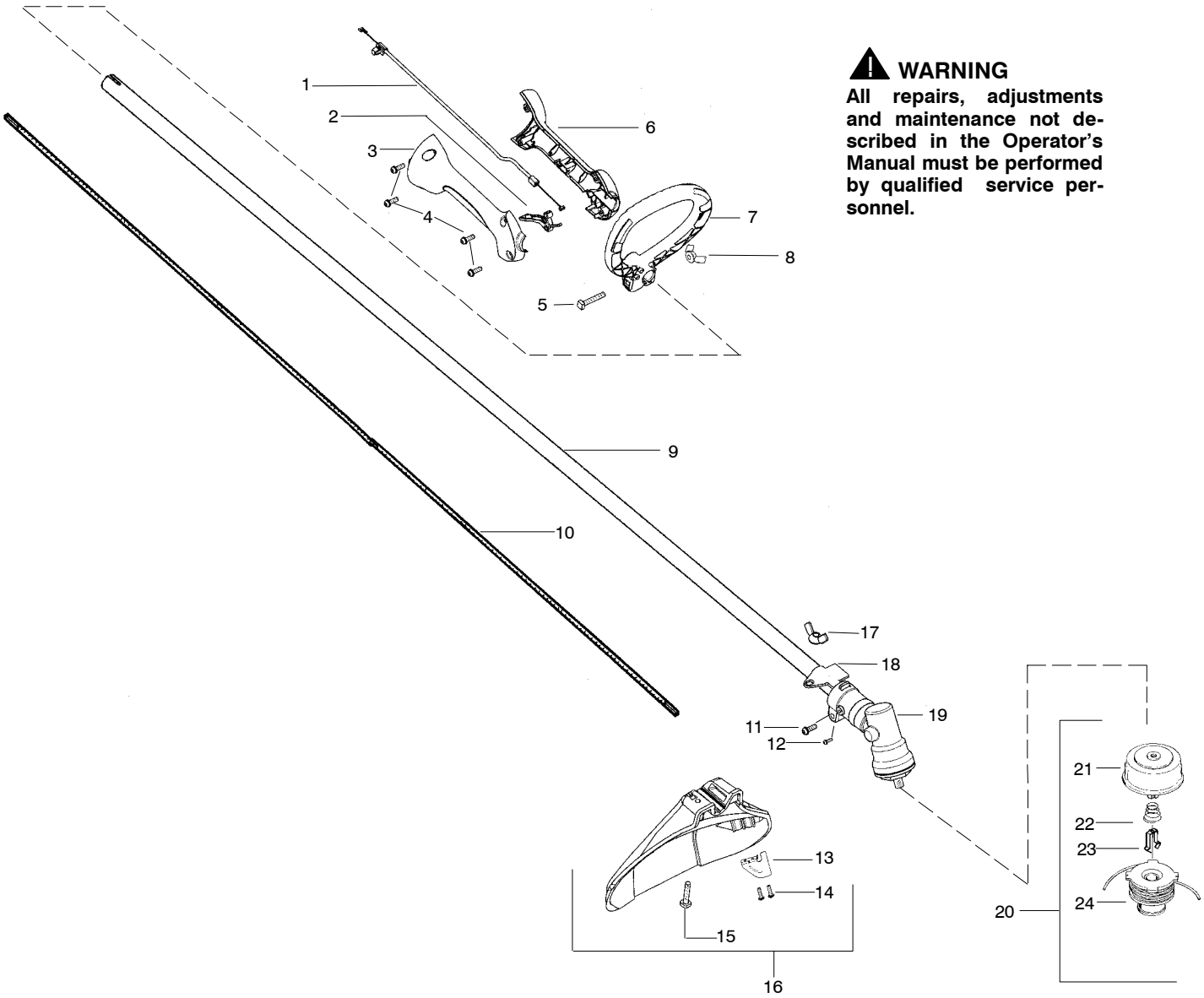

⚠ WARNING

All repairs, adjustments and maintenance not described in the Operator's Manual must be performed by qualified service personnel.

Ref.	Part No.	Description	Ref.	Part No.	Description
1.	530057991	Assy – Throttle Cable	17.	530016152	Wingnut
2.	530058000	Trigger	18.	530096067	Bracket – Shield
3.	530057582	Throttle Hsg. (Right)	19.	530096068	Assy – Gearbox
4.	530015880	Screw – Throttle Hsg.	20.	952711550	Accy – TNG VI Cutting Head (Incl. 21 – 24)
5.	530015821	Bolt – Handle/Shield			
6.	530057581	Throttle Hsg. (Left)	21.	530095772	Assy – Hub
7.	530057587	Handle – Assist	22.	530053241	Spring – Compression
8.	530016152	Wingnut	23.	530401957	Clip – Retainer – Head
9.	530071661	Assy – Drive Shaft Hsg.	24.	952711551	Accy – Spool w/Line
10.	530096075	Shaft – Flex			
11.	530016014	Screw			
12.	530016224	Screw – Alignment		Not Shown	
13.	530052285	Line Limiter			
14.	530015966	Screw – Line Limiter			
15.	530015820	Bolt	✓	545186832	Operator Manual
16.	530071771	Kit – Shield Assy (Incl. 13 – 15,17)		530057720	Decal – Start Inst.
			✓	545144405	Decal – Shaft Warning

✓ = NEW PART NUMBER FOR THIS IPL ★ = REFER TO THE SERVICE REFERENCE INDICATED FOR MORE INFORMATION. (LOCATED AT END OF IPL)

Download from Www.Somanuals.com. All Manuals Search And Download.

PARTS LIST NO. 530164151		WEED EATER® PARTS LIST	MODEL(s) Featherlite SST25
DATE 3/04/09	Replaces 530164151 – 6/06/08	**Note:** Illustration may differ from actual model due to design changes	PAGE NO. 2

⚠ WARNING

All repairs, adjustments and maintenance not described in the Operator's Manual must be performed by qualified service personnel.

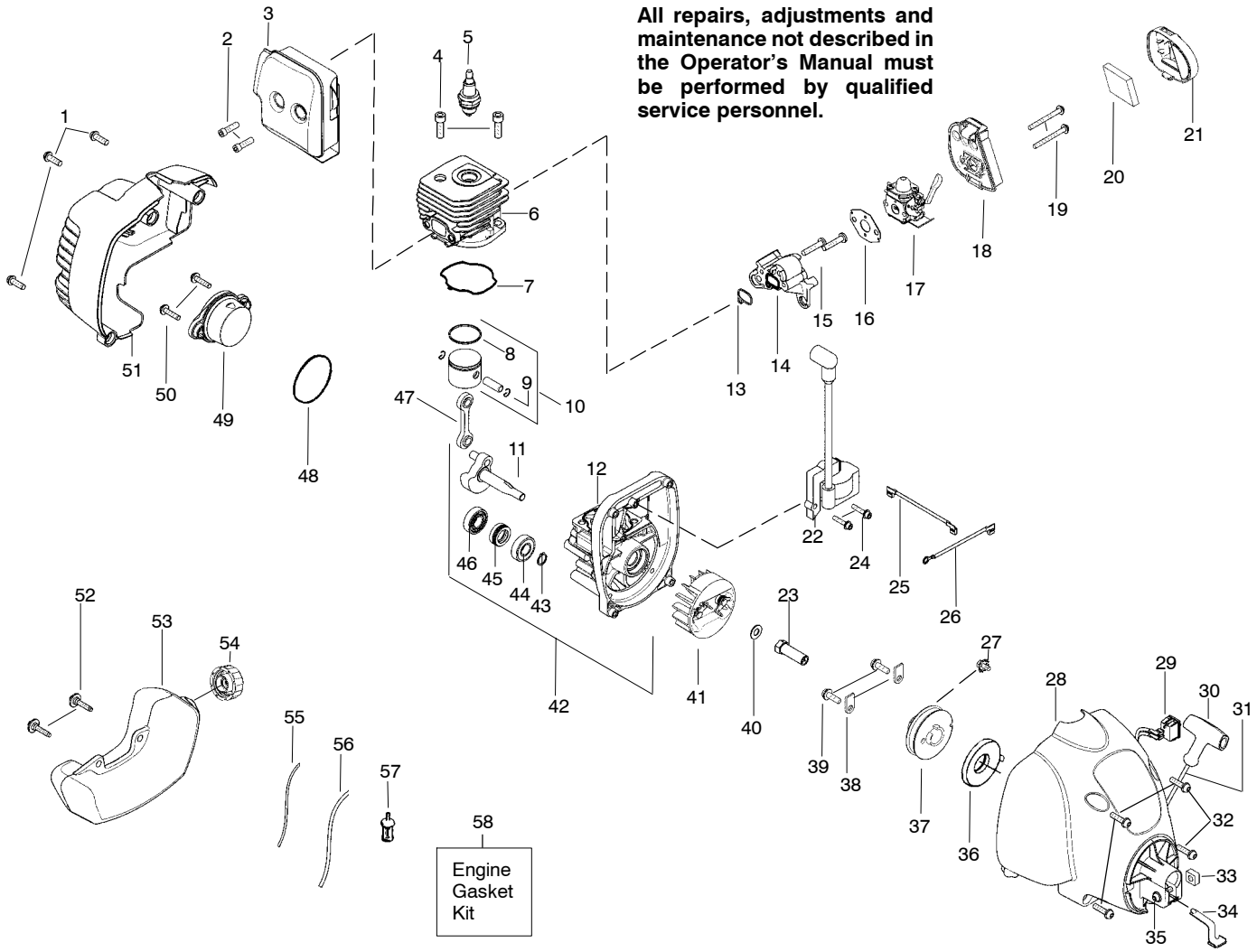

Ref.	Part No.	Description	Ref.	Part No.	Description	Ref.	Part No.	Description
1.	530015880	Screw	21.	530057584	Cover-Air Box	45.	530019264	Seal-C'case
2.	530058982	Bolt-Muffler	22.	530039223	Ignition Module	46.	530032125	Inner Bearing
3.	530057863	Assy-Muffler/Shield (Incl. 2)	23.	530038604	Coupling-Drive	47.	530069945	Assy-Connecting Rod
			24.	530016357	Screw	48.	530071750	O-Ring-C'case (kit)
4.	530015953	Screw-Cylinder	25.	530014663	Assy-Leadwire	49.	530057954	Assy-Plug (incl.48)
5.	952030249	Spark Plug (RCJ 6Y)	26.	530014662	Assy-Ground Wire	50.	530016386	Screw
6.	530012541	Cylinder	27.	530016392	Screw	51.	----	Shroud-Rear
7.	530071750	Seal-Cylinder (kit)	28.	530058600	Assy.-Fan Hsg		530057580	Green
8.	530055120	Piston Ring	29.	530071356	Kit-Switch		545011004	Black
9.	530015162	Retainer-Piston Pin	30.	530027569	Handle-Starter	52.	530016431	Retainer-Tank
10.	530071357	Kit - Piston (Incl. 8, 9)	31.	530071767	Kit - Rope	53.	545104103	Assy-Fuel Tank (incl. filter, lines & fuel cap)
11.	530057829	Assy-Crankshaft	32.	530015810	Screw			
12.	530012542	Assy-Crankcase (Incl. 44-46)	33.	530016124	Nut	54.	530014347	Assy-Fuel Cap
			34.	530057588	Clip-Spring	55.	530069247	Kit-Fuel Line (Small)
13.	530071750	Seal-Cyl/Carb.(kit)	35.	530016430	Screw	56.	530069216	Kit-Fuel Line (Large)
14.	530057547	Adapter-Carb.	36.	530042085	Spring-Starter	57.	530095646	Assy-Fuel Pickup
15.	530016309	Screw	37.	530071786	Kit-Pulley-Starter	58.	530071750	Kit-Engine Gasket (Incl. 7,13,16,48)
16.	530071750	Gasket-Carb. (kit)	38.	530027523	Retainer-Pulley			
17.	----	Kit-Carb.	39.	530015775	Screw			
	530071752	Zama (C1U-W18)	40.	530015828	Washer-Flat			
	545081808	Walbro (WT-669)	41.	530054115	Assy-Flywheel		Not Shown	
(Note: Repair kits are not available for this carburetor)			42.	530071768	Assy-C'case & C'shaft (Incl. 11,12,43)		530057827	Choke Lever - Zama
18.	530057585	Air Box	43.	530015941	Retain. Ring-C'shaft		530058662	Choke Lever - Walbro
19.	530016429	Screw	44.	530055728	Outer Bearing		530058709	Bulb-Purge
20.	530057781	Foam-Air Filter						

✓ = NEW PART NUMBER FOR THIS IPL ★ = REFER TO THE SERVICE REFERENCE INDICATED FOR MORE INFORMATION. (LOCATED AT END OF IPL)

Download from Www.Somanuals.com. All Manuals Search And Download.

Free Manuals Download Website

http://myh66.com

http://usermanuals.us

http://www.somanuals.com

http://www.4manuals.cc

http://www.manual-lib.com

http://www.404manual.com

http://www.luxmanual.com

http://aubethermostatmanual.com

Golf course search by state

http://golfingnear.com

Email search by domain

http://emailbydomain.com

Auto manuals search

http://auto.somanuals.com

TV manuals search

http://tv.somanuals.com