STANLEY®

BR50 HYDRAULIC BREAKER

USER MANUAL

Safety, Operation and Maintenance

New Britain, CT 06053
U.S.A.
72962 7/2014 Ver. 3

DECLARATION OF CONFORMITY

DECLARATION OF CONFORMITY
ÜBEREINSTIMMUNGS-ERKLARUNG
DECLARATION DE CONFORMITE CEE
DECLARACION DE CONFORMIDAD
DICHIARAZIONE DI CONFORMITA

STANLEY
Hydraulic Tools

CE

I, the undersigned:
Ich, der Unterzeichnende:
Je soussigné:
El abajo firmante:
Io sottoscritto:

Weisbeck, Andy

Surname and First names/Familiennname und Vornamen/Nom et prénom/Nombre y apellido/Cognome e nome

hereby declare that the equipment specified hereunder:
bestätige hiermit, daß erklaren Produkt genannten Werk oder Gerät:
déclare que l'équipement visé ci-dessous:
Por la presente declaro que el equipo se especifica a continuación:
Dichiaro che le apparecchiature specificate di seguito:

1. Category:
   Kategorie:
   Catégorie:
   Categoria:
   Categoria: **Hydraulic Hand Held Concrete Breaker**
2. Make/Marke/Marque/Marca/Marca **Stanley**
3. Type/Typ/Type/Tipo/Tipo: **BR5017801, BR5017801AA, BR5057801, BR5057801AA**
4. Serial number of equipment:
   Seriennummer des Geräts:
   Numéro de série de l'équipement:
   Numero de serie del equipo:
   Matricola dell´attrezzatura: **All**
5. Mass/Masse/Masse/Masa/Massa 25 kg

Has been manufactured in conformity with
Wurde hergestellt in Übereinstimmung mit
Est fabriqué conformément
Ha sido fabricado de acuerdo con
E' stata costruita in conformitá con

Directive/Standards Richtlinie/Standards Directives/Normes Directriz/Los Normas Direttiva/Norme	No. Nr Numéro No n.	Approved body Prüfung durch Organisme agréé Aprobado Collaudato
ISO Noise Directive Machinery Directive	11148-4:2010 2000/14/EC:2005 2006/42/EC:2006	Self AkustikNet (Notified body ID 1585) Bagsvard Hovedgade 141, 2880 Bagsvard, Denmark Certificate #863/2011/003 Self

6. Special Provisions: **None**
   Spezielle Bestimmungen:
   Dispositions particulières:
   Provisiones especiales:
   Disposizioni speciali:

7. Measurements: **Measured Sound Power Level 102 LwA**
   Messungen **Guaranteed Sound Power Level 104 LwA**
   Mesures Measured in accordance to Directive 2000/14/EC,
   Mediciones Annex III, Part B, No 10, 15 < m < 30
   Misurazioni

8. Representative in the Union: **Patrick Vervier**, **Stanley Dubuis 17-19, rue Jules Berthonneau-BP 3406 41034 Blois Cedex, France.**
   Vertreter in der Union/Représentant dans l'union/Representante en la Union/Rappresentante presso l'Unione

Done at/Ort/Fait à/Dado en/Fatto a Stanley Hydraulic Tools, Milwaukie, Oregon USA Date/Datum/le/Fecha/Data 4-30-2012

Signature/Unterschrift/Signature/Firma/Firma Andy Weisbeck

Position/Position/Fonction/Cargo/Posizione Engineering Manager

STANLEY

TABLE OF CONTENTS

IMPORTANT

To fill out a Product Warranty Recording form, and for information on your warranty, visit Stanleyhydraulics.com and select the Company tab, Warranty.
(**NOTE:** The warranty recording form must be submitted to validate the warranty).

SERVICING: This manual contains safety, operation, and routine maintenance instructions. Stanley Hydraulic Tools recommends that servicing of hydraulic tools, other than routine maintenance, must be performed by an authorized and certified dealer. Please read the following warning.

⚠ WARNING

SERIOUS INJURY OR DEATH COULD RESULT FROM THE IMPROPER REPAIR OR SERVICE OF THIS TOOL.

REPAIRS AND / OR SERVICE TO THIS TOOL MUST ONLY BE DONE BY AN AUTHORIZED AND CERTIFIED DEALER.

For the nearest authorized and certified dealer, call Stanley Hydraulic Tools at the number listed on the back of this manual and ask for a Customer Service Representative.

SAFETY SYMBOLS

Safety symbols and signal words, as shown below, are used to emphasize all operator, maintenance and repair actions which, if not strictly followed, could result in a life-threatening situation, bodily injury or damage to equipment.

⚠	This is the safety alert symbol. It is used to alert you to potential personal injury hazards. Obey all safety messages that follow this symbol to avoid possible injury or death.
⚠ DANGER	This safety alert and signal word indicate an imminently hazardous situation which, if not avoided, will result in death or serious injury.
⚠ WARNING	This safety alert and signal word indicate a potentially hazardous situation which, if not avoided, could result in death or serious injury.
⚠ CAUTION	This safety alert and signal word indicate a potentially hazardous situation which, if not avoided, could result in death or serious injury.
CAUTION	This signal word indicates a potentially hazardous situation which, if not avoided, may result in property damage.
NOTICE	This signal word indicates a situation which, if not avoided, will result in damage to the equipment.
IMPORTANT	This signal word indicates a situation which, if not avoided, may result in damage to the equipment.

Always observe safety symbols. They are included for your safety and for the protection of the tool.

LOCAL SAFETY REGULATIONS

Enter any local safety regulations here. Keep these instructions in an area accessible to the operator and maintenance personnel.

SAFETY PRECAUTIONS

Tool operators and maintenance personnel must always comply with the safety precautions given in this manual and on the stickers and tags attached to the tool and hose.

These safety precautions are given for your safety. Review them carefully before operating the tool and before performing general maintenance or repairs.

Supervising personnel should develop additional precautions relating to the specific work area and local safety regulations. If so, place the added precautions in the space provided in this manual.

The BR50 Hydraulic Breaker will provide safe and dependable service if operated in accordance with the instructions given in this manual. Read and understand this manual and any stickers and tags attached to the tool and hoses before operation. Failure to do so could result in personal injury or equipment damage.

- Operator must start in a work area without bystanders. The operator must be familiar with all prohibited work areas such as excessive slopes and dangerous terrain conditions.
- Establish a training program for all operators to ensure safe operation.
- Do not operate the tool unless thoroughly trained or under the supervision of an instructor.
- Always wear safety equipment such as goggles, gloves, ear, head, and breathing protection, and safety shoes at all times when operating the tool.
- Do not inspect, carry or clean the tool while the hydraulic power source is connected. Accidental engagement of the tool can cause serious injury.
- Supply hoses must have a minimum working pressure rating of 2500 psi/175 bar.
- Be sure all hose connections are tight.
- The hydraulic circuit control valve must be in the **OFF** position when coupling or uncoupling the tool. Wipe all couplers clean before connecting. Use only lint-free cloths. Failure to do so may result in damage to the quick couplers and cause overheating of the hydraulic system.
- Do not operate the tool at oil temperatures above 140 °F/60 °C. Operation at higher oil temperatures can cause operator discomfort and may damage the tool. Never come in contact with the tool bit, the bit can get hot.
- Do not operate a damaged, improperly adjusted, or incompletely assembled tool.
- Do not weld, cut with an acetylene torch, or hardface the tool bit.
- To avoid personal injury or equipment damage, all tool repair, maintenance and service must only be performed by authorized and properly trained personnel.
- Do not exceed the rated limits of the tool or use the tool for applications beyond its design capacity.
- Always keep critical tool markings, such as labels and warning stickers legible.
- Always replace parts with replacement parts recommended by Stanley Hydraulic Tools.
- Check fastener tightness often and before each use daily.
- Never operate the tool if you cannot be sure that underground utilities are not present.
- Do not wear loose fitting clothing when operating the tool.
- **Warning:** Use of this tool on certain materials during demolition could generate dust potentially containing a variety of hazardous substances such as asbestos, silica or lead. Inhalation of dust containing these or other hazardous substances could result in serious injury, cancer or death. Protect yourself and those around you. Research and understand the materials you are cutting. Follow correct safety procedures and comply with all applicable national, state or provisional health and safety regulations relating to them, including, if appropriate arranging for the safe disposal of the materials by a qualified person.

SAFETY PRECAUTIONS

- Warning: Hydraulic fluid under pressure could cause skin injection injury. If you are injured by hydraulic fluid, get medical attention immediately.
- Keep all body parts away from the working tool.
- When handling material or the tool bit, wear your (PPE) Personal Protection Equipment.
- Be observant of the hydraulic hoses lying about the work area, they can be a tripping hazard.
- Always de-energize the hydraulic system when changing a tool bit.
- Take caution when changing a tool bit, tool bits can get very hot.
- Never use the tool in an explosive atmosphere, sparks from the breaking process could ignite explosive gas.
- Use proper lifting techniques when handling the tool, get help from a co-worker and do not over-reach.
- Use proper protection from falling or flying debris, keep bystanders at a safe distance.
- Do not exceed the rated flow and pressure. See Specifications in this manual for correct flow rate and pressure rating. Rapid failure of the internal seals may result.

TOOL STICKERS & TAGS

28409
Composite Sticker
All Models

28322
CE Sticker

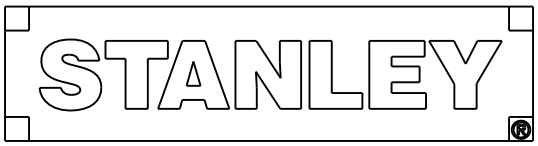

14090
Stanley Logo

11207
Circuit Type D Sticker
BR5017801

10180
Caution N2 Gas Sticker

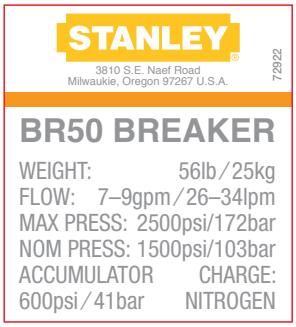

72922
Name Tag (Anti-Vib Handle)

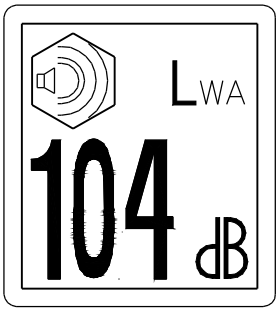

65458
Guaranteed Sound
Level Sticker

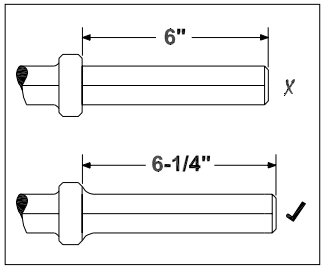

11208
Hex Shank Length
Sticker

72982
Name Tag (Anti-Vib Handle)

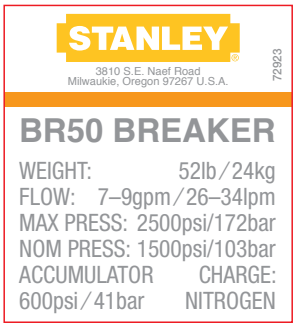

72923
Name Tag (T-Handle)

NOTE:

THE INFORMATION LISTED ON THE STICKERS SHOWN, MUST BE LEGIBLE AT ALL TIMES.

REPLACE DECALS IF THEY BECOME WORN OR DAMAGED. REPLACEMENTS ARE AVAILABLE FROM YOUR LOCAL STANLEY DISTRIBUTOR.

The safety tag (P/N 15875) at right is attached to the tool when shipped from the factory. Read and understand the safety instructions listed on this tag before removal. We suggest you retain this tag and attach it to the tool when not in use.

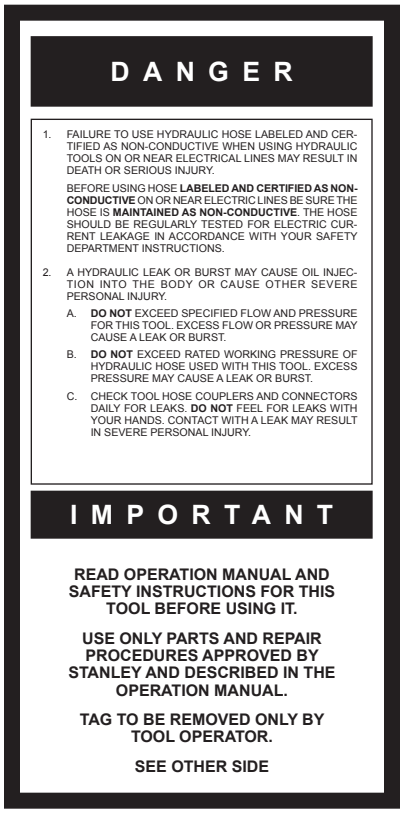

DANGER

1. FAILURE TO USE HYDRAULIC HOSE LABELED AND CERTIFIED AS NON-CONDUCTIVE WHEN USING HYDRAULIC TOOLS ON OR NEAR ELECTRICAL LINES MAY RESULT IN DEATH OR SERIOUS INJURY.

   BEFORE USING HOSE **LABELED AND CERTIFIED AS NON-CONDUCTIVE** ON OR NEAR ELECTRIC LINES BE SURE THE HOSE IS **MAINTAINED AS NON-CONDUCTIVE**. THE HOSE SHOULD BE REGULARLY TESTED FOR ELECTRIC CURRENT LEAKAGE IN ACCORDANCE WITH YOUR SAFETY DEPARTMENT INSTRUCTIONS.

2. A HYDRAULIC LEAK OR BURST MAY CAUSE OIL INJECTION INTO THE BODY OR CAUSE OTHER SEVERE PERSONAL INJURY.
   A. **DO NOT** EXCEED SPECIFIED FLOW AND PRESSURE FOR THIS TOOL. EXCESS FLOW OR PRESSURE MAY CAUSE A LEAK OR BURST.
   B. **DO NOT** EXCEED RATED WORKING PRESSURE OF HYDRAULIC HOSE USED WITH THIS TOOL. EXCESS PRESSURE MAY CAUSE A LEAK OR BURST.
   C. CHECK TOOL HOSE COUPLERS AND CONNECTORS DAILY FOR LEAKS. **DO NOT** FEEL FOR LEAKS WITH YOUR HANDS. CONTACT WITH A LEAK MAY RESULT IN SEVERE PERSONAL INJURY.

IMPORTANT

READ OPERATION MANUAL AND SAFETY INSTRUCTIONS FOR THIS TOOL BEFORE USING IT.

USE ONLY PARTS AND REPAIR PROCEDURES APPROVED BY STANLEY AND DESCRIBED IN THE OPERATION MANUAL.

TAG TO BE REMOVED ONLY BY TOOL OPERATOR.

SEE OTHER SIDE

DANGER

   D. DO NOT LIFT OR CARRY TOOL BY THE HOSES. DO NOT ABUSE HOSE. DO NOT USE KINKED, TORN OR DAMAGED HOSE.

3. MAKE SURE HYDRAULIC HOSES ARE PROPERLY CONNECTED TO THE TOOL BEFORE PRESSURING SYSTEM. SYSTEM PRESSURE HOSE MUST ALWAYS BE CONNECTED TO TOOL "IN" PORT. SYSTEM RETURN HOSE MUST ALWAYS BE CONNECTED TO TOOL "OUT" PORT. REVERSING CONNECTIONS MAY CAUSE REVERSE TOOL OPERATION WHICH CAN RESULT IN SEVERE PERSONAL INJURY.
4. DO NOT CONNECT OPEN-CENTER TOOLS TO CLOSED-CENTER HYDRAULIC SYSTEMS. THIS MAY RESULT IN LOSS OF OTHER HYDRAULIC FUNCTIONS POWERED BY THE SAME SYSTEM AND/OR SEVERE PERSONAL INJURY.
5. BYSTANDERS MAY BE INJURED IN YOUR WORK AREA. KEEP BYSTANDERS CLEAR OF YOUR WORK AREA.
6. WEAR HEARING, EYE, FOOT, HAND AND HEAD PROTECTION.
7. TO AVOID PERSONAL INJURY OR EQUIPMENT DAMAGE, ALL TOOL REPAIR MAINTENANCE AND SERVICE MUST ONLY BE PERFORMED BY AUTHORIZED AND PROPERLY TRAINED PERSONNEL.

IMPORTANT

READ OPERATION MANUAL AND SAFETY INSTRUCTIONS FOR THIS TOOL BEFORE USING IT.

USE ONLY PARTS AND REPAIR PROCEDURES APPROVED BY STANLEY AND DESCRIBED IN THE OPERATION MANUAL.

TAG TO BE REMOVED ONLY BY TOOL OPERATOR.

SEE OTHER SIDE

SAFETY TAG P/N 15875 (Shown smaller then actual size)

HOSE TYPES

The rated working pressure of the hydraulic hose must be equal to or higher than the relief valve setting on the hydraulic system. There are three types of hydraulic hose that meet this requirement and are authorized for use with Stanley Hydraulic Tools. They are:

Certified non-conductive — constructed of thermoplastic or synthetic rubber inner tube, synthetic fiber braid reinforcement, and weather resistant thermoplastic or synthetic rubber cover. *Hose labeled **certified non-conductive** is the only hose authorized for use near electrical conductors.*

Wire-braided (conductive) — constructed of synthetic rubber inner tube, single or double wire braid reinforcement, and weather resistant synthetic rubber cover. *This hose is **conductive** and must never be used near electrical conductors.*

Fabric-braided (not certified or labeled non-conductive) — constructed of thermoplastic or synthetic rubber inner tube, synthetic fiber braid reinforcement, and weather resistant thermoplastic or synthetic rubber cover. *This hose is **not certified non-conductive** and must never be used near electrical conductors.*

HOSE SAFETY TAGS

To help ensure your safety, the following DANGER tags are attached to all hose purchased from Stanley Hydraulic Tools. DO NOT REMOVE THESE TAGS.

If the information on a tag is illegible because of wear or damage, replace the tag immediately. A new tag may be obtained from your Stanley Distributor.

THE TAG SHOWN BELOW IS ATTACHED TO "CERTIFIED NON-CONDUCTIVE" HOSE

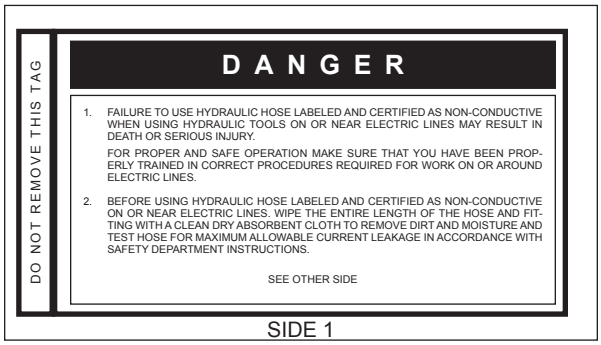

SIDE 1

SIDE 2

(Shown smaller than actual size)

THE TAG SHOWN BELOW IS ATTACHED TO "CONDUCTIVE" HOSE.

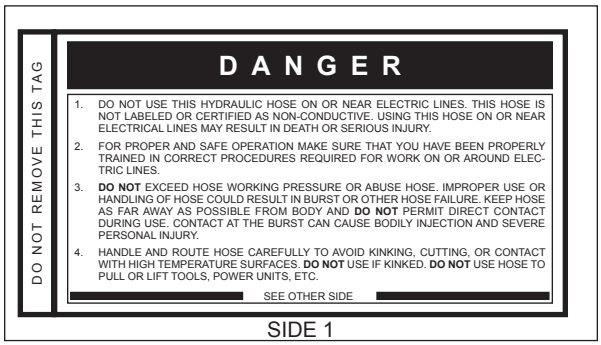

SIDE 1

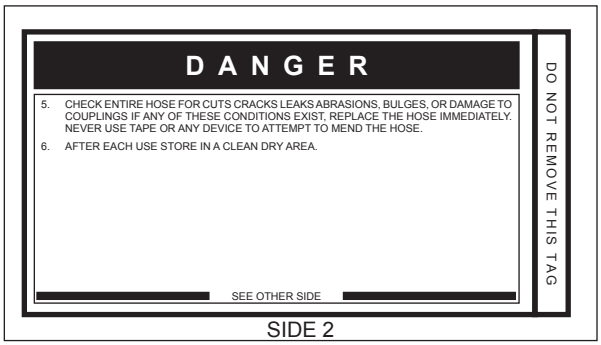

SIDE 2

(Shown smaller than actual size)

Tool to Hydraulic Circuit Hose Recommendations

The chart to the right shows recommended minimum hose diameters for various hose lengths based on gallons per minute (gpm)/ liters per minute (lpm). These recommendations are intended to keep return line pressure (back pressure) to a minimum acceptable level to ensure maximum tool performance.

This chart is intended to be used for hydraulic tool applications only based on Stanley Hydraulic Tools tool operating requirements and should not be used for any other applications.

All hydraulic hose must have at least a rated minimum working pressure equal to the maximum hydraulic system relief valve setting.

All hydraulic hose must meet or exceed specifications as set forth by SAE J517.

Oil Flow		Hose Lengths		Inside Diameter		USE (Press/Return)	Min. Working Pressure	
GPM	LPM	FEET	METERS	INCH	MM		PSI	BAR
Certified Non-Conductive Hose - Fiber Braid - for Utility Bucket Trucks								
4-9	15-34	up to 10	up to 3	3/8	10	Both	2250	155
Conductive Hose - Wire Braid or Fiber Braid -DO NOT USE NEAR ELECTRICAL CONDUCTORS								
4-6	15-23	up to 25	up to 7.5	3/8	10	Both	2500	175
4-6	15-23	26-100	7.5-30	1/2	13	Both	2500	175
5-10.5	19-40	up to 50	up to 15	1/2	13	Both	2500	175
5-10.5	19-40	51-100	15-30	5/8	16	Both	2500	175
5-10.5	19-40	100-300	30-90	5/8	16	Pressure	2500	175
				3/4	19	Return	2500	175
10-13	38-49	up to 50	up to 15	5/8	16	Both	2500	175
10-13	38-49	51-100	15-30	5/8	16	Pressure	2500	175
				3/4	19	Return	2500	175
10-13	38-49	100-200	30-60	3/4	19	Pressure	2500	175
				1	25.4	Return	2500	175
13-16	49-60	up to 25	up to 8	5/8	16	Pressure	2500	175
				3/4	19	Return	2500	175
13-16	49-60	26-100	8-30	3/4	19	Pressure	2500	175
				1	25.4	Return	2500	175

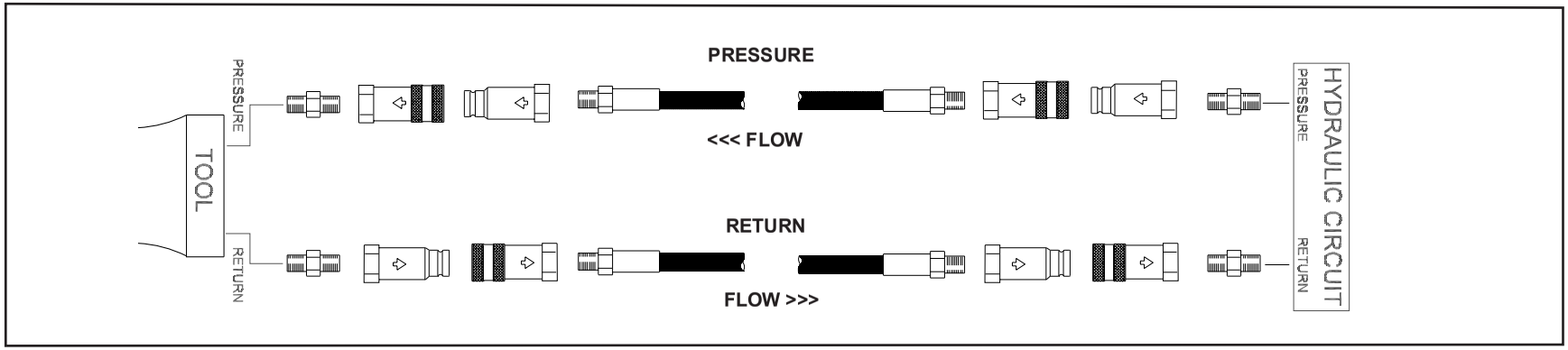

Figure 1. Typical Hose Connections

HTMA / EHTMA REQUIREMENTS

HTMA HYDRAULIC SYSTEM REQUIREMENTS	TOOL TYPE			
	TYPE I	TYPE II	TYPE RR	TYPE III
Flow Range	4-6 gpm (15-23 lpm)	7-9 gpm (26-34 lpm)	9-10.5 gpm (34-40 lpm)	11-13 gpm (42-49 lpm)
Nominal Operating Pressure (at the power supply outlet)	1500 psi (103 bar)	1500 psi (103 bar)	1500 psi (103 bar)	1500 psi (103 bar)
System relief valve setting (at the power supply outlet)	2100-2250 psi (145-155 bar)	2100-2250 psi (145-155 bar)	2200-2300 psi (152-159 bar)	2100-2250 psi (145-155 bar)
Maximum back pressure (at tool end of the return hose)	250 psi (17 bar)	250 psi (17 bar)	250 psi (17 bar)	250 psi (17 bar)
Measured at a max. fluid viscosity of: (at min. operating temperature)	400 ssu* (82 centistokes)	400 ssu* (82 centistokes)	400 ssu* (82 centistokes)	400 ssu* (82 centistokes)
Temperature: Sufficient heat rejection capacity to limit max. fluid temperature to: (at max. expected ambient temperature)	140° F (60° C)	140° F (60° C)	140° F (60° C)	140° F (60° C)
Min. cooling capacity at a temperature difference of between ambient and fluid temps	3 hp (2.24 kW) 40° F (22° C)	5 hp (3.73 kW) 40° F (22° C)	6 hp (5.22 kW) 40° F (22° C)	7 hp (4.47 kW) 40° F (22° C)
NOTE: Do not operate the tool at oil temperatures above 140° F (60° C). Operation at higher temperatures can cause operator discomfort at the tool.				
Filter Min. full-flow filtration Sized for flow of at least: (For cold temp. startup and max. dirt-holding capacity)	25 microns 30 gpm (114 lpm)	25 microns 30 gpm (114 lpm)	25 microns 30 gpm (114 lpm)	25 microns 30 gpm (114 lpm)
Hydraulic fluid Petroleum based (premium grade, anti-wear, non-conductive) Viscosity (at min. and max. operating temps)	100-400 ssu*	100-400 ssu* (20-82 centistokes)	100-400 ssu*	100-400 ssu*

NOTE:
When choosing hydraulic fluid, the expected oil temperature extremes that will be experienced in service determine the most suitable temperature viscosity characteristics. Hydraulic fluids with a viscosity index over 140 will meet the requirements over a wide range of operating temperatures.

*SSU = Saybolt Seconds Universal

EHTMA HYDRAULIC SYSTEM REQUIREMENTS	CLASSIFICATION				
	B 15Lpm at 138bar EHTMA CATEGORY	C 20Lpm at 138bar EHTMA CATEGORY	D 30Lpm at 138bar EHTMA CATEGORY	E 40Lpm at 138bar EHTMA CATEGORY	F 50Lpm at 138bar EHTMA CATEGORY
Flow Range	3.5-4.3 gpm (13.5-16.5 lpm)	4.7-5.8 gpm (18-22 lpm)	7.1-8.7 gpm (27-33 lpm)	9.5-11.6 gpm (36-44 lpm)	11.8-14.5 gpm (45-55 lpm)
Nominal Operating Pressure (at the power supply outlet)	1870 psi (129 bar)	1500 psi (103 bar)	1500 psi (103 bar)	1500 psi (103 bar)	1500 psi (103 bar)
System relief valve setting (at the power supply outlet)	2495 psi (172 bar)	2000 psi (138 bar)	2000 psi (138 bar)	2000 psi (138 bar)	2000 psi (138 bar)

NOTE: These are general hydraulic system requirements. See tool specification page for tool specific requirements

STANLEY

The recommended hose size is .500 inch/12 mm ID up to 50 ft/15 m long and .625 inch/16 mm ID minimum up to 100 ft/30 m.

PRE-OPERATION PROCEDURES

CHECK POWER SOURCE

1. Using a calibrated flowmeter and pressure gauge, check that the hydraulic power source develops a flow of 7–9 gpm/26–34 lpm at 2000 psi/140 bar or 5–6 gpm /18–22 lpm at 1500–2000 psi /105–140 bar.
2. Make certain the hydraulic power source is equipped with a relief valve set to open at 2250 psi/155 bar maximum.

INSTALL TOOL BIT

1. Rotate the latch on the breaker foot downward (pointing away from the tool).
2. Insert the tool bit into the foot and pull the latch up to lock the tool bit in place.

CONNECT HOSES

1. Wipe all hose couplers with a clean, lint-free cloth before making connections.
2. Connect the hoses from the hydraulic power source to the tool fittings or quick disconnects. It is a good practice to connect return hoses first and disconnect them last to minimize or avoid trapped pressure within the tool.
3. Observe flow indicators stamped on hose couplers to ensure that fluid flow is in the proper direction. The female coupler on the tool hose is the inlet coupler.
4. Move the hydraulic circuit control valve to the ON position to operate the tool.

NOTE:

If uncoupled hoses are left in the sun, pressure increase within the hoses may make them difficult to connect. When possible, connect the free ends of the hoses together.

OPERATION PROCEDURES

1. Observe all safety precautions.
2. Install the appropriate tool bit for the job.
3. Place the bit firmly on the surface to be broken.
4. Squeeze the trigger to start the breaker. Adequate down pressure is very important. When the tool bit breaks through the obstruction or becomes bound, release the trigger and reposition the tool bit.

NOTE:

Partially depressing the trigger allows the tool to run at slow speed. Slow-speed operation permits easier starting of the tool bit into the work surface.

5. To start, break an opening (hole) in the center of the surface. After making a hole, break portions of the material into the original opening. For best productivity, the breaking should be done around the original hole.

   The size of the broken material will vary with the strength and thickness of the base material and the amount of any reinforcement wire or rebar.

   Harder material or more reinforcing wire or rebar will require taking smaller bites. To determine the most effective bite, start with 2 in./50 mm or smaller bites.

   Bites can then be gradually increased until the broken piece becomes too large, requiring increased time to break off the piece.

   Sticking of the tool bit occurs when too large a bite is being taken and the tool bit hammers into the material without the material fracturing. This causes the tool bit to become trapped in the surrounding material.

COLD WEATHER OPERATION

If the breaker is to be used during cold weather, preheat the hydraulic fluid at low engine speed. When using the normally recommended fluid, fluid temperature should be at or above 50 °F/10 °C (400 ssu/82 centistokes) before use.

Damage to the hydraulic system or breaker can result from use with fluid that is too viscous or thick.

TOOL PROTECTION & CARE

NOTICE

In addition to the Safety Precautions found in this manual, observe the following for equipment protection and care.

- Make sure all couplers are wiped clean before connection.
- The hydraulic circuit control valve must be in the **OFF** position when coupling or uncoupling hydraulic tools. Failure to do so may result in damage to the quick couplers and cause overheating of the hydraulic system.
- Always store the tool in a clean dry space, safe from damage or pilferage.
- Make sure the circuit PRESSURE hose (with male quick disconnect) is connected to the **IN** port. The circuit RETURN hose (with female quick disconnect) is connected to the opposite port. Do not reverse circuit flow. This can cause damage to internal seals.
- Always replace hoses, couplings and other parts with replacement parts recommended by Stanley Hydraulic Tools. Supply hoses must have a minimum working pressure rating of 2500 psi/172 bar.
- Do not exceed the rated flow and pressure. See Specifications in this manual for correct flow rate and pressure rating. Rapid failure of the internal seals may result.
- Always keep critical tool markings, such as warning stickers and tags legible.
- Do not force a small breaker to do the job of a large breaker.
- Keep tool bit sharp for maximum breaker performance. Make sure that tool bits are not chipped or rounded on the striking end.
- Never operate a breaker without a tool bit or without holding it against the work surface. This puts excessive strain on the breaker foot.
- Tool repair should be performed by experienced personnel only.
- Make certain that the recommended relief valves are installed in the pressure side of the system.
- Do not use the tool for applications for which it was not intended.

TROUBLESHOOTING

PROBLEM	CAUSE	REMEDY
Tool does not run.	Power unit not functioning.	Check power source for proper flow and pressure (7–9 gpm/ 26–34 lpm, 2000 psi/ 140 bar) or 5–6 gpm /18–22 lpm at 1500–2000 psi /105–140 bar.
	Couplers or hoses blocked.	Remove restriction.
	Pressure and return line hoses reversed at ports.	Be sure hoses are connected to their proper ports.
	Mechanical failure of piston or automatic valve.	Disassemble breaker and inspect for damaged parts.
Tool does not hit effectively.	Power unit not functioning.	Check power source for proper flow and pressure (7–9 gpm/ 26–34 lpm, 2000 psi/ 140 bar) or 5–6 gpm /18–22 lpm at 1500–2000 psi /105–140 bar.
	Couplers or hoses blocked.	Remove restriction.
	Low accumulator charge (pressure hose will pulse more than normal).	Recharge accumulator. Replace diaphragm if charge loss continues.
	Fluid too hot (above 140 °F/60 °C).	Provide cooler to maintain proper fluid temperature (130 °F/55 °C).
Tool operates slow.	Low gpm supply from power unit.	Check power source for proper flow and pressure (7–9 gpm/ 26–34 lpm, 2000 psi/ 140 bar) or 5–6 gpm /18–22 lpm at 1500–2000 psi /105–140 bar.
	High back-pressure.	Check hydraulic system for excessive back-pressure (over 200 psi/14 bar).
	Couplers or hoses blocked.	Remove restriction.
	Orifice plug blocked.	Remove restriction.
	Fluid too hot (above 140 °F/60 °C) or too cold (below 60 °F/16 °C).	Check power unit for proper fluid temperature. Bypass cooler to warm the fluid or provide cooler to maintain proper temperature.
	Relief valve set too low.	Adjust relief valve to 2100–2250 psi/145–155 bar.
	Collar support not sliding freely in the foot bore (Easi-Ride™).	Remove, clean and replace as required.
Tool gets hot.	Hot fluid going through tool.	Check power unit. Be sure flow rate is not too high causing part of the fluid to go through the relief valve. Provide cooler to maintain proper fluid temperature (140 °F/60 °C max). Check the relief valve setting. Eliminate flow control devices.
Fluid leakage on tool bit.	Lower piston seal failure.	Replace seal.
Fluid leakage around trigger.	Valve spool seal failure.	Replace seals.

CHARGING THE ACCUMULATOR

ACCUMULATOR TESTING PROCEDURE

To check or charge the accumulator the following equipment is required:

- 31254 Charge Kit: which includes the following.
  - Accumulator Tester (Part Number 02835).
  - Charging Assembly (P/N 15304: includes a liquid filled gauge with snub valve, hose and fittings).
- NITROGEN bottle with an 800 psi/55 bar minimum charge. (Not included in 31254 kit)

⚠ CAUTION

The breaker contains nitrogen under pressure.

1. Remove the plug from the handle or handle pivot.
2. Holding the chuck end of Accumulator Tester (P/N 02835) turn the gauge fully counterclockwise to ensure that the stem inside the chuck is completely retracted.
3. Thread the tester onto the accumulator charging valve. Do not advance the gauge-end into the chuck-end. Turn as a unit. Seat the chuck on the accumulator charging valve and hand tighten only.
4. Advance the valve stem of the tester by turning the gauge-end clockwise until a pressure is read on the gauge (charge pressure should be 500–700 psi/34–48 bar).
5. If pressure is OK unscrew the gauge-end from the chuck to retract the stem, then unscrew the entire tester assembly from the accumulator charging valve. If pressure is low, charge the accumulator as described in the following section.
6. Install the plug.

ACCUMULATOR CHARGING

1. Perform Steps 1 through 4 of the Accumulator Testing procedure.
2. Connect the chuck of the charging assembly to the charging valve on the accumulator tester or, if preferred, remove the tester from the charging valve and connect the charging assembly chuck directly to the charging valve.
3. Adjust the snub valve to a charging pressure of 600 psi/42 bar. Note: While watching the pressure gauge, open snub valve slowly until it reaches the proper charge pressure (600–700 psi).

NOTE:

It may be necessary to set the gauge at 650–700 psi/45–48 bar to overcome any pressure drop through the charging system.

4. When the accumulator is fully charged close the snub valve on the charging assembly hose and remove the charging assembly chuck from the accumulator tester or tool charging valve.
5. If the accumulator tester has been used, be sure to turn the gauge-end fully counterclockwise before removing the tester from the charging valve of the tool. Install the valve cap.

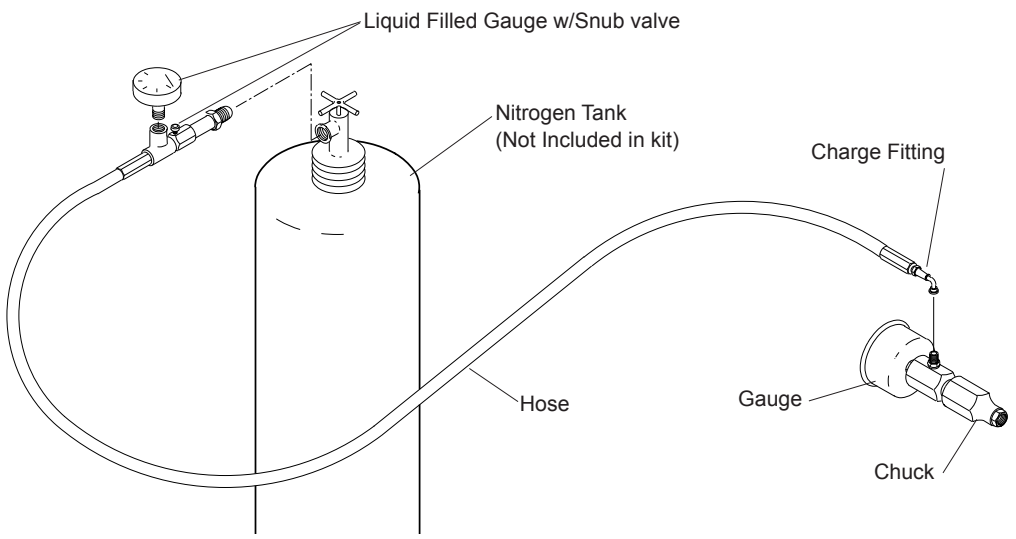

31254 Accumulator Charge Kit: Includes all of the above **except** the Nitrogen tank

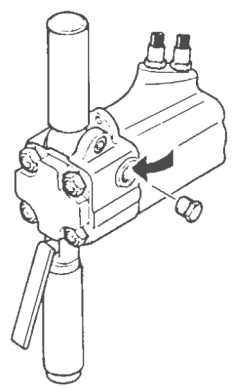

Location of charge valve on Anti-Vib Models. On T-Handle models charge valve is located on the top of breaker.

Figure 2. Charging the Accumulator

SPECIFICATIONS

Pressure Range.....1500-2000 psi/105-140 bar
Maximum Back Pressure.....250 Psi/17 bar
Flow Range (EHTMA D/HTMA Class II).....7–9 gpm/26–34 lpm
Nominal Flow..... (EHTMA D/HTMA-II) = 8 gpm/30 lpm

Flow Range (EHTMA D/HTMA Class I).....4–6 gpm /1–22 lpm
Nominal Flow..... (EHTMA D/HTMA-I) = 5 gpm/19 lpm

Hose Whips.....Yes
Connect Size & Type.....3/8 in Male Pipe Hose Ends
Weight (T-Handle Models).....52 lbs/24 kg
(Anti Vib Models).....56 lbs/25 kg

Overall Length.....28.5 in./72.4 cm
Overall Width at Handles.....17.25 in/44 cm
Max. Fluid Temperature.....140 °F/60 °C
System Type.....Open Center
Port Size.....SAE 8 O-ring

HTMA/EHTMA Category.....Type 1 - 2
Nominal Pressure.....1500 psi/103 bar
Max Pressure.....2500 psi/172 bar
Max Relief Pressure.....2150 psi/148 bar

NOTE:

Weights, dimensions and operating specifications listed herein are subject to change without notice. Where specifications are critical to your applications, please consult Stanley Hydraulic Tools.

BR50 SOUND AND VIBRATION DECLARATION

Test conducted on BR5017801,operated at standard 8 gpm input

Measured A-weighted sound power level, Lwa (ref. 1pW) in decibels	102 dBA
Uncertainty, Kwa, in decibels	1.6 dBA
Guaranteed sound power level	104 dBA
Measured A-weighted sound pressure level, Lpa (ref. 20 μPa) at operator's position, in decibels	98 dBA
Uncertainty, Kpa, in decibels	3 dBA

Values determined according to noise test code given in ISO 15744, using the basic standard ISO3744 Test conducted by independent notified body to comply with 2000/14/EC:2005 requirements.
NOTE- The sum of a measured noise emission value and its associated uncertainty represents an upper boundary of the range of values which is likely to occur in measurements.
Declared vibration emission value in accordance with EN 12096

Measured vibration emission value: 3-Axis	5.9 m/sec²
Uncertainty: K	0.5 m/sec²
Measurred Vibration emission value with uncertainty (3 Axis)	6.4 m/sec²
Measured vibration emission value: Z-Axis	2.4 m/sec²
Uncertainty: K	0.5 m/sec²
Measurred Vibration emission value with uncertainty (Z Axis)	4 m/sec²

Values determined according to ISO 8662-5, ISO 5349-1,2

TEST EQUIPMENT / ACCESSORIES

TEST EQUIPMENT

Accumulator Tester 02835
Flow and Pressure Tester 04182
Accumulator Charge Assembly (Includes Liquid Filled Gauge w/ Valve, Hose, & Charge Fitting) 15304
Accumulator Charge Kit (Includes 02835 Tester, 15304 Charge Assy and 372047 Charge Kit Box) 31254

SERVICE TOOLS

Flow Sleeve Removal Tube 04910
Flow Sleeve Removal Tool 04919
Accumulator Cylinder Puller 05640
Tamper Sleeve Tool 01120
O-ring Tool Kit 04337

ACCESSORIES

1-1/8 IN. HEX × 6 IN. SHANK

Moil Point – 14 in. Long UC 02333
Chisel Point – 14 in. Long UC 03990
3-inch Chisel – 14 in. Long UC 02334
Clay Spade – 5-1/2 in. Blade 02331
Asphalt Wedge – 12 in. 08106
Asphalt Cutter – 5 in. Wide 02332
Ground Rod Driver – 1 in. Rod 04176

1-1/4 IN. HEX × 6 IN. SHANK

Moil Point – 14 in. Long UC 02336
3-inch Chisel – 14 in. Long UC 02337
Clay Spade – 5-1/2 in. Blade 09262
Asphalt Cutter – 5 in. Wide 02335
Ground Rod Driver – 1 in. Rod 04367
Heavy Duty Chisel – 1 in.. 02338
Heavy Duty Moil Point – 18 in. 04404
Clay Spade – 8 in. 04405
Detachable Shank (Requires 17783) 17782
Tamping Pad – 6 in. (Requires 17782) 17783

BR50 T-HANDLE ILLUSTRATION

PICTURED IS A BR50120
FOR BREAKER FOOT PARTS THAT
PERTAIN TO YOUR MODEL SEE
PAGES 21 thru 23.

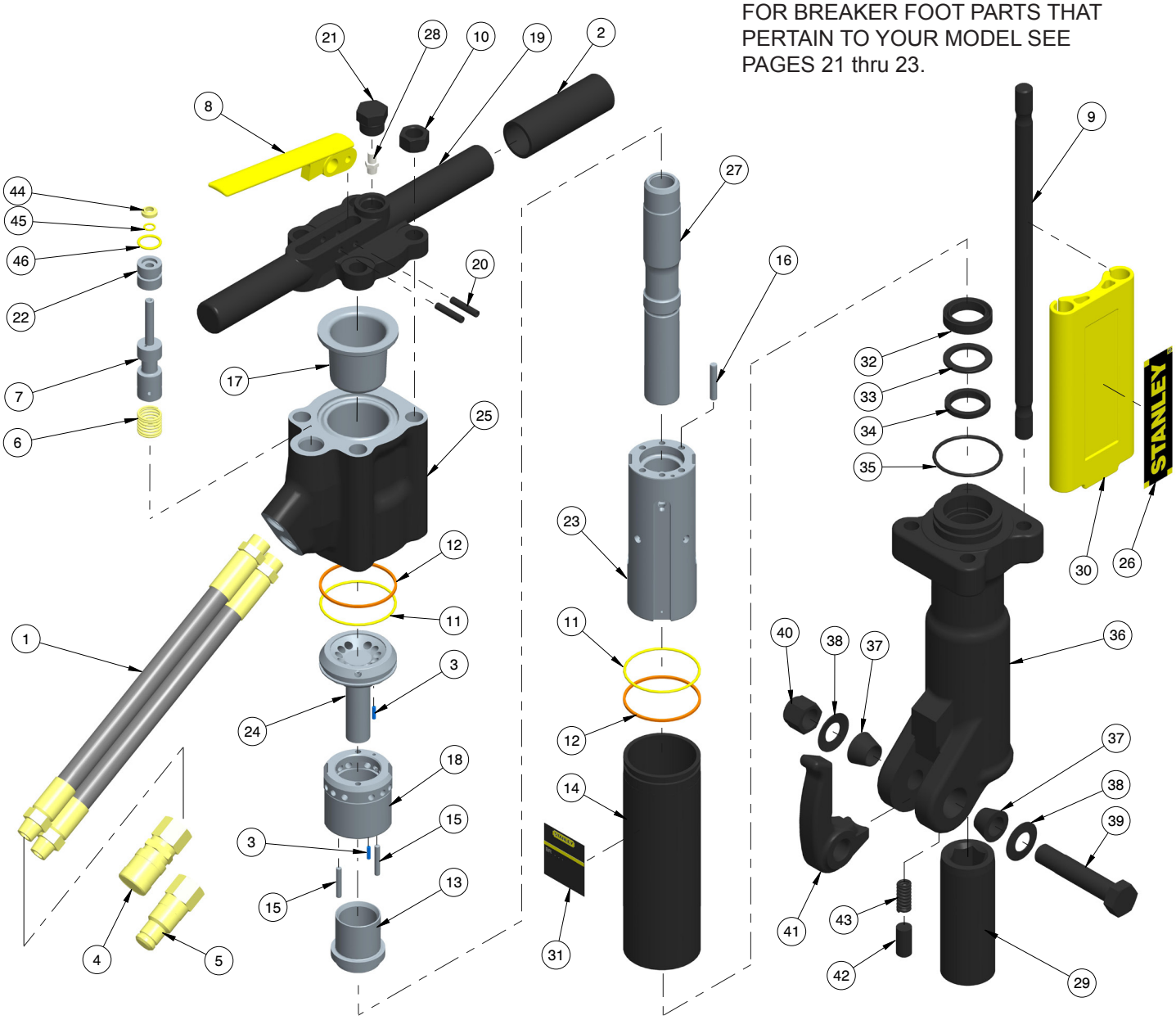

BR50 T-HANDLE PARTS LIST

ITEM	P/N	QTY	DESCRIPTION
1	01652	2	HOSE WHIP 12"
2	02494	2	HANDLE GRIP
3	02900	2	ROLL PIN
4	03972	1	COUPLER,3/8FEM. 3/8NPT
5	03973	1	COUPLER,3/8MALE 3/8NPT
6	04058	1	SPRING
7	04077	1	VALVE SPOOL
8	04371	1	TRIGGER
9	04373	4	SIDE ROD
10	04374	4	HEX NUT
11	04379	2	O-RING*
12	04381	2	BACK-UP RING*
13	04382	1	AUTOMATIC VALVE
14	04383	1	FLOW SLEEVE TUBE
15	04571	2	PUSH PIN
16	04605	4	PUSH PIN
17	07479	1	ACCUMULATOR DIAPHRAGM
18	07480	1	AUTOMATIC VALVE BODY
19	07483	1	HANDLE
20	07492	2	ROLL PIN
21	07493	1	O-RING PLUG MALE
22	04057	1	BUSHING (BUSHING ASSY 07699 INCLUDES ITEMS 44-46)
23	09611	1	FLOW SLEEVE
24	09640	1	PORTING BLOCK
25	11588	1	ACCUMULATOR ON-OFF
26	14090	2	STANLEY LOGO
27	19443	1	PISTON
28	20499	1	CHARGE VALVE
29	04081	1	HEX BUSHING 1-1/8”
30	72919	2	FILLER SNAP-ON SMALL

ITEM	P/N	QTY	DESCRIPTION
31	72923	1	NAME TAG-BR50 T-HANDLE
32	34092	1	CUP SEAL*
33	09642	1	BACK UP WASHER
34	03127	1	ROD WIPER*
35	02022	1	O-RING*
36			SEE BREAKER FOOT ASSY”S (PAGES 21 THRU 23)
37	01269	2	TAPER SLEEVE
38	04985	2	SPRING WASHER
39	04983	1	FOOT LATCH BOLT
40	04984	1	NYLOCK NUT
41	01837	1	LATCH
42	08411	1	DETENT
43	01744	1	SPRING
44	04056	1	ROD WIPER*
45	01362	1	O-RING*
46	00293	1	O-RING*

SEAL KIT P/N-13552

* DENOTES PART IN SEAL KIT

BR50 ANTI-VIB ILLUSTRATION

PICTURED IS A BR5017801
FOR BREAKER FOOT PARTS THAT
PERTAIN TO YOUR MODEL SEE
PAGES 21 thru 23.

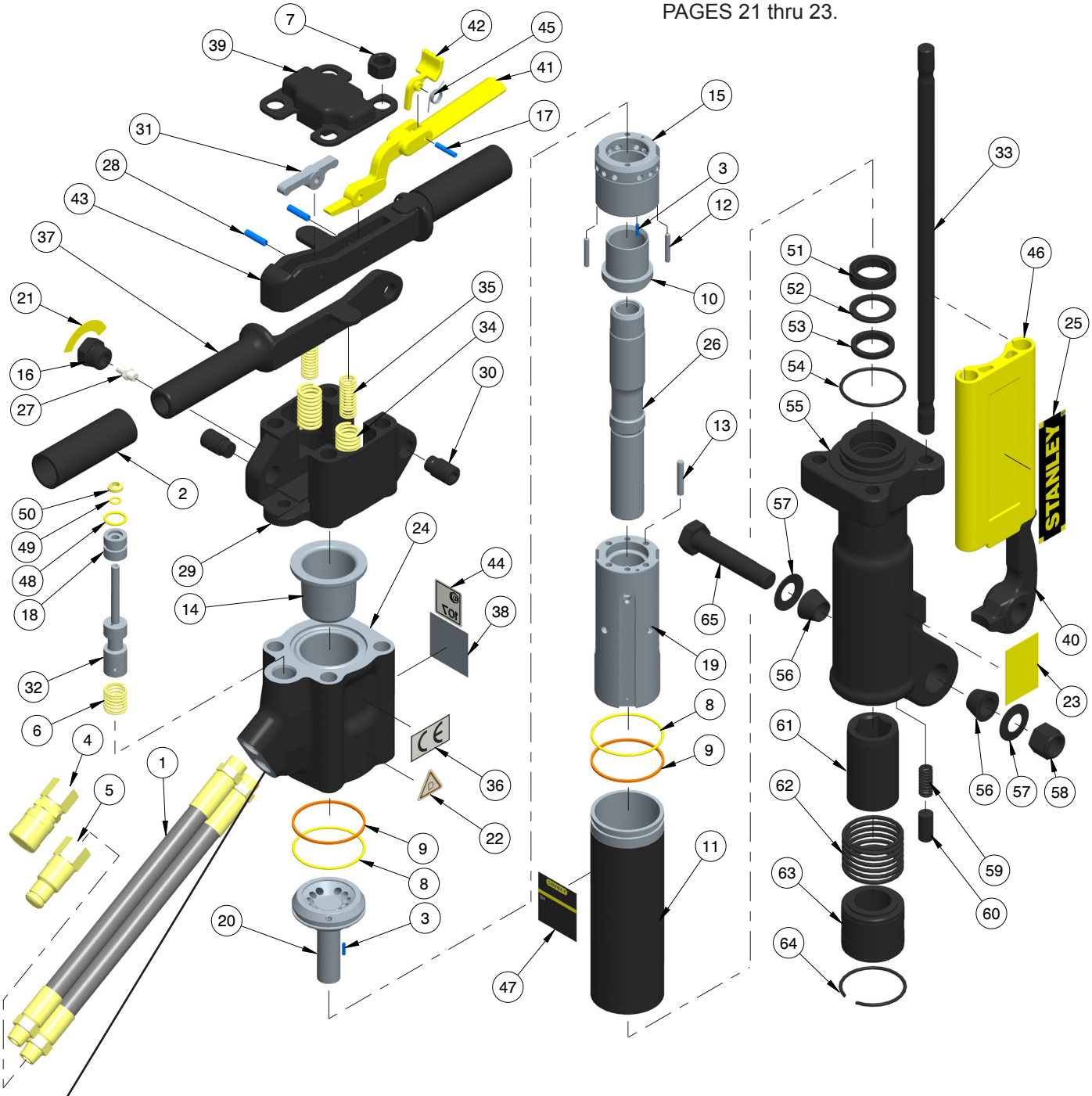

NOTE: 5-GPM Models (BR5057801 & BR5057801AA) have a Orifice Plug P/N-12832 Installed in the lower return port of item 24 Accumulator On-Off Valve Block (Orifice Plug not pictured).

BR50 ANTI-VIB PARTS LIST

ITEM	P/N	QTY	DESCRIPTION
1	01652	2	HOSE WHIP 12"
2	02494	2	HANDLE GRIP
3	02900	2	ROLL PIN
4	03972	1	COUPLER,3/8FEM. 3/8NPT FL.FACE SET 03971
5	03973	1	COUPLER,3/8MALE 3/8NPT FL.FACE SET 03971
6	04058	1	SPRING
7	04374	4	HEX NUT
8	04379	2	O-RING*
9	04381	2	BACK-UP RING*
10	04382	1	AUTOMATIC VALVE
11	04383	1	FLOW SLEEVE TUBE
12	04571	2	PUSH PIN
13	04605	4	PUSH PIN
14	07479	1	ACCUMULATOR DIAPHRAGM
15	07480	1	AUTOMATIC VALVE BODY
16	07493	1	O-RING PLUG MALE
17	07624	1	ROLL PIN
18	04057	1	BUSHING (BUSHING ASSY 07699 INCLUDES ITEMS 48-50)
19	09611	1	FLOW SLEEVE
20	09640	1	PORTING BLOCK
21	10180	1	CAUTION N2 GAS STICKER
22	11207	1	CIRCUIT TYPE "D" STICKER
	11206	1	CIRCUIT TYPE “C” STICKER (5-GPM MODELs ONLY)
23	11208	1	HEX SHANK STICKER
24	11588	1	ACCUMULATOR ON-OFF VALVE BLOCK
25	14090	2	STANLEY LOGO
26	19443	1	PISTON
	58597	1	PISTON (5-GPM MODELS ONLY BR5057801 & BR5057801AA)
27	20499	1	CHARGE VALVE
28	20500	2	ROLL PIN
29	20505	1	HANDLE PIVOT BLOCK
30	20508	2	PIVOT SCREW
31	20511	1	LEVER
32	20515	1	VALVE SPOOL
33	20517	4	SIDE ROD
ITEM	P/N	QTY	DESCRIPTION
34	20540	2	COMPRESSION COIL SPRING
35	20541	2	COMPRESSION COIL SPRING
36	28322	1	STICKER "CE"
37	28369	1	HANDLE (GUARDED)
38	28409	1	COMPOSITE STICKER
39	28494	1	TOP PLATE
40	01837	1	LATCH
41	58526	1	CAST TRIGGER
42	58527	1	TRIGGER LOCK
43	58529	1	TRIGGER HANDLE
44	65458	1	GUARANTEED SOUND POWER LEVEL - 104dB (BR5057801)
45	66828	1	TORSION SPRING
46	72919	2	FILLER SNAP-ON SMALL
47	72927	1	NAME TAG-BR50 8-GPM
	72982	1	NAME TAG-BR50 5-GPM
48	00293	1	O-RING*
49	01362	1	O-RING*
50	04056	1	ROD WIPER*
51	34092	1	CUP SEAL*
52	09642	1	BACK UP WASHER
53	03127	1	ROD WIPER*
54	02022	1	O-RING*
55			SEE BREAKER FOOT ASSY’s (PAGES 21 THRU 23)
56	01269	2	TAPER SLEEVE
57	04985	2	SPRING WASHER
58	04984	1	NYLOCK NUT
59	01744	1	SPRING
60	08411	1	DETENT
61	11230	1	HEX BUSHING 1-1/4”
62	08158	1	COMPRESSION SPRING
63	11234	1	COLLAR SUPPORT ASSY
64	07522	1	RETAINING RING
65	04983	1	FOOT LATCH BOLT

SEAL KIT P/N-13552

* DENOTES PART IN SEAL KIT

STANLEY

BR50 BREAKER FOOT PARTS LIST

BREAKER FOOT ASSEMBLY (STANDARD) P/N-72825 (MODEL BR50120 and BR50125)
72825 Assembly Includes Items 1 thru 14 Below.

ITEM	P/N	QTY	DESCRIPTION
1	01269	2	TAPER SLEEVE
2	01744	1	SPRING
3	01837	1	LATCH
4	02022	1	O-RING*
5	03127	1	ROD WIPER*
6	04081	1	HEX BUSHING 1-1/8"

ITEM	P/N	QTY	DESCRIPTION
7	04983	1	FOOT LATCH BOLT
8	04984	1	NYLOCK NUT
9	04985	2	SPRING WASHER
10	08411	1	DETENT
11	09642	1	BACK UP WASHER
12	09643	1	INSERT
13	32275	1	BREAKER FOOT
14	34092	1	SEAL*

1-1/8” HEX

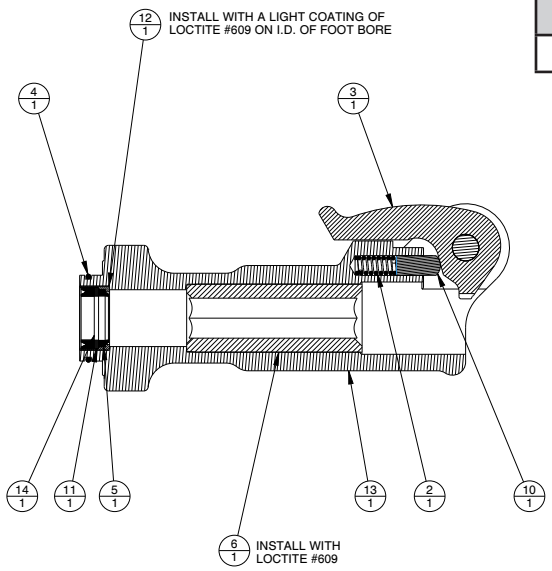

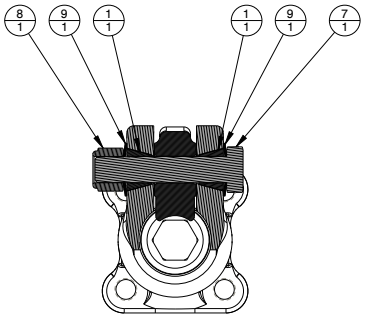

NOTE: IF YOU ARE REPLACING THE HEX BUSHING OR INSERT YOU MUST PURCHASE A COMPLETE BREAKER ASSEMBLY.

BREAKER FOOT ASSEMBLY (EASY RIDE) P/N-72932 (MODEL BR50120E)
72932 Assembly Includes Items 1 thru 17 Below.

ITEM	P/N	QTY	DESCRIPTION
1	01269	2	TAPER SLEEVE
2	01744	1	SPRING
3	01837	1	LATCH
4	02022	1	O-RING*
5	03127	1	ROD WIPER*
6	04983	1	FOOT LATCH BOLT
7	04984	1	NYLOCK NUT
8	04985	2	SPRING WASHER

ITEM	P/N	QTY	DESCRIPTION
9	07517	1	HEX BUSHING 1-1/8"
10	07522	1	RETAINING RING
11	08115	1	COLLAR SUPPORT ASSY.
12	08157	1	BREAKER FOOT
13	08158	1	SPRING
14	08411	1	DETENT
15	09642	1	BACK UP WASHER
16	09643	1	INSERT
17	34092	1	CUP SEAL*

1-1/8” HEX

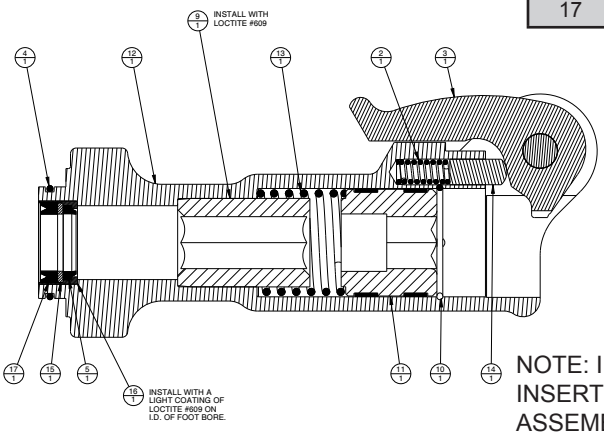

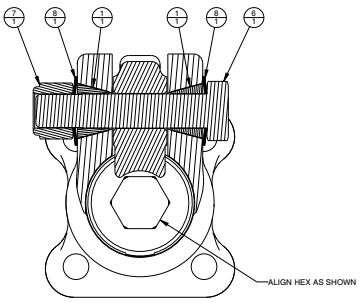

NOTE: IF YOU ARE REPLACING THE HEX BUSHING OR INSERT YOU MUST PURCHASE A COMPLETE BREAKER ASSEMBLY.

BR50 BREAKER FOOT PARTS LIST

BREAKER FOOT ASSEMBLY (STANDARD) P/N-72828 (MODELS BR50130 and BR50135)
72828 Assembly Includes Items 1 thru 14 Below.

ITEM	P/N	QTY	DESCRIPTION
1	01269	2	TAPER SLEEVE
2	01744	1	SPRING
3	01837	1	LATCH
4	02022	1	O-RING*
5	03127	1	ROD WIPER*
6	04597	1	HEX BUSHING 1-1/4"

ITEM	P/N	QTY	DESCRIPTION
7	04983	1	FOOT LATCH BOLT
8	04984	1	NYLOCK NUT
9	04985	2	SPRING WASHER
10	08411	1	DETENT
11	09642	1	BACK UP WASHER
12	09643	1	INSERT
13	32275	1	BREAKER FOOT
14	34092	1	CUP SEAL*

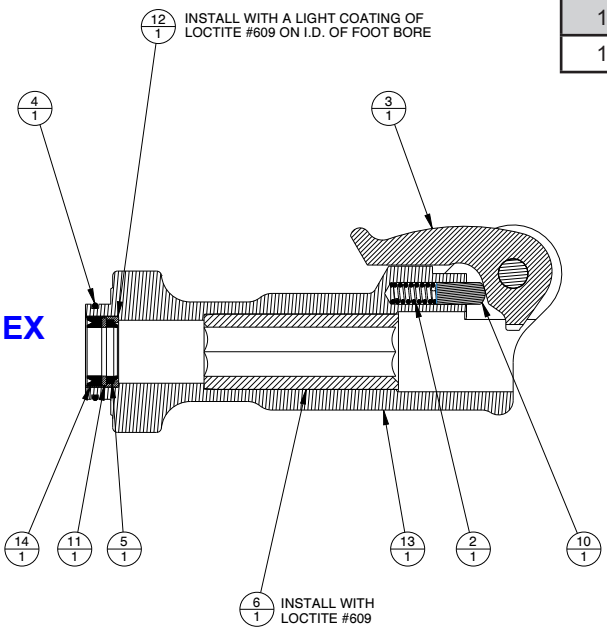

1-1/4" HEX

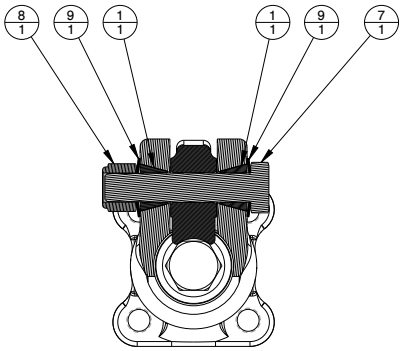

NOTE: IF YOU ARE REPLACING THE HEX BUSHING OR INSERT YOU MUST PURCHASE A COMPLETE BREAKER ASSEMBLY.

BREAKER FOOT ASSEMBLY (EASY RIDE) P/N-72019 (MODEL BR50130E)
72019 Assembly Includes Items 1 thru 17 Below.

ITEM	P/N	QTY	DESCRIPTION
1	01269	2	TAPER SLEEVE
2	01744	1	SPRING
3	01837	1	LATCH
4	02022	1	O-RING*
5	03127	1	ROD WIPER*
6	04983	1	FOOT LATCH BOLT
7	04984	1	NYLOCK NUT
8	04985	2	SPRING WASHER

ITEM	P/N	QTY	DESCRIPTION
9	07518	1	HEX BUSHING 1-1/4"
10	07522	1	RETAINING RING
11	08116	1	COLLAR SUPPORT ASSY.
12	08157	1	BREAKER FOOT
13	08158	1	SPRING
14	08411	1	DETENT
15	09642	1	BACK UP WASHER
16	09643	1	INSERT
17	34092	1	CUP SEAL*

NOTE: IF YOU ARE REPLACING THE HEX BUSHING OR INSERT YOU MUST PURCHASE A COMPLETE BREAKER ASSEMBLY.

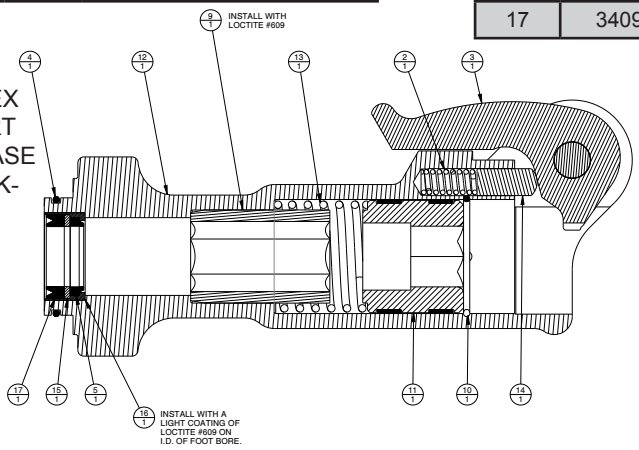

1-1/4" HEX

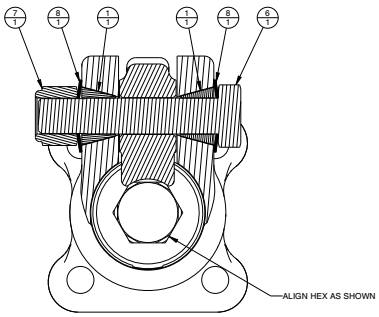

STANLEY

BR50 BREAKER FOOT PARTS LIST

BREAKER FOOT ASSEMBLY (EASY RIDE) UK P/N-48772 (MODELS BR5017801, BR5017801AA, BR5057801 and BR5057801AA)

ITEM	P/N	QTY	DESCRIPTION
1	01269	2	TAPER SLEEVE
2	01744	1	SPRING
3	01837	1	LATCH
4	02022	1	O-RING*
5	03127	1	ROD WIPER*
6	04983	1	FOOT LATCH BOLT
7	04984	1	NYLOCK NUT
8	04985	2	SPRING WASHER

ITEM	P/N	QTY	DESCRIPTION
9	07522	1	RETAINING RING
10	08158	1	SPRING
11	08411	1	DETENT
12	09642	1	BACK UP WASHER
13	09643	1	INSERT
14	11230	1	HEX BUSHING 1-1/4"
15	11234	1	COLLAR SUPPORT ASSY.
16	11636	1	BREAKER FOOT
17	34092	1	CUP SEAL*

1-1/4" HEX

UK AND CE MODELS

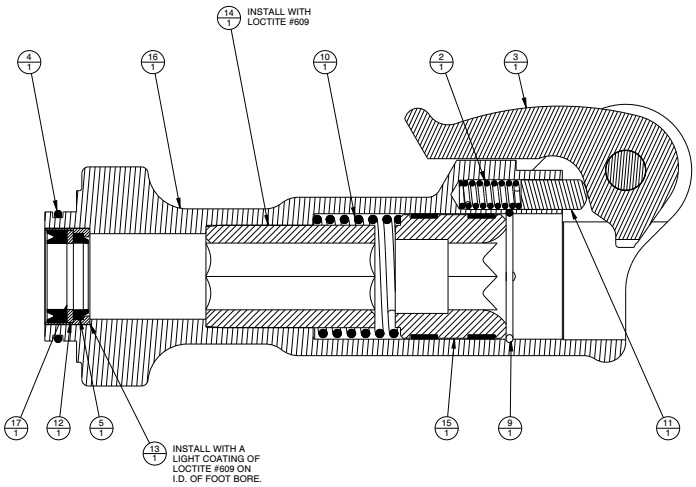

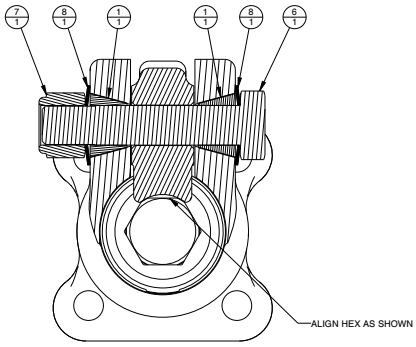

NOTE: IF YOU ARE REPLACING THE HEX BUSHING OR INSERT YOU MUST PURCHASE A COMPLETE BREAKER ASSEMBLY.

STANLEY®

Stanley Hydraulic Tools
3810 SE Naef Road
Milwaukie, Oregon 97267-5698 USA
(503) 659-5660 / Fax (503) 652-1780
www.stanleyhydraulics.com