Aprilaire®

ELECTRONIC THERMOSTAT

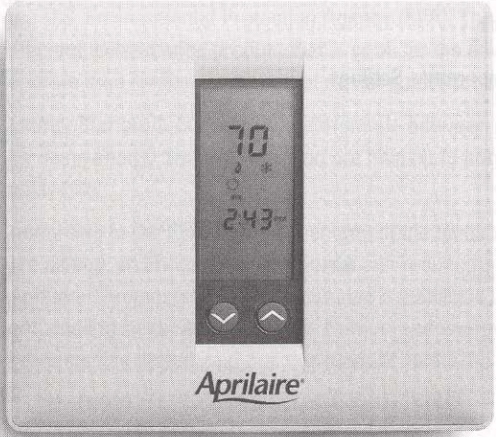

Owner's Manual

MODEL 8555

7 Day Programmable Thermostat

EPA DOE
SAVING THE EARTH. SAVING YOUR MONEY.

Download from Www.Somanuals.com. All Manuals Search And Download.

OWNER'S MANUAL – TABLE OF CONTENTS

Energy Star® Program Information 1
Setting Or Changing The Clock 3
Setting Or Changing The Program 5
Progressive Recovery 5
Program Schedule 7
Setting Or Changing Program Times 8
Setting Or Changing Program Temperatures 10
- Heating 10
- Cooling 11

Reviewing Programmed Time Schedules And Temperature Settings 13
To Start Running The Program 13
For Best Performance 14
Thermostat Operation 14
- Temperature Control 16
- Time Control 17
- Equipment Control 18

Optional Settings For Additional Thermostat Features 20
Setting High And Low Balance Points 28
Using Available LED Indicators 29
In Case Of Power Failure 30
Cleaning 30
Limited Warranty 31

© Research Products Corporation 2000

Download from Www.Somanuals.com. All Manuals Search And Download.

Energy Star® Program Information

About half of all energy used by households goes to heating and cooling the home. By selecting a programmable Aprilaire® Electronic Thermostat, you have made a significant step toward conserving energy usage and costs, while improving your indoor comfort.

In fact, the Aprilaire Electronic Thermostat Model 8555 has earned the "Energy Star®" designation of the U.S. Environmental Protection Agency (EPA). This means that your Aprilaire Thermostat is a highly efficient, cutting edge product that is good for the environment. It saves energy and costs less to operate than similar products that do not qualify for the Energy Star label.

Energy Star products help you differentiate between standard efficiency and high efficiency products. By using Energy Star products you are helping to prevent air pollution while saving money on your utility bills.

According to the EPA, taking advantage of the times that a home is unoccupied or the occupants are asleep, an Energy Star thermostat can reduce heating and cooling bills by as much as 30%. The Aprilaire Thermostat has programmable capabilities that allow you full flexibility to set your heating and cooling systems to meet your comfort and energy needs. As an Energy Star partner, Research Products has determined that this product meets the Energy Star guidelines for energy efficiency.

As part of the Energy Star program, your thermostat has been programmed with the following times and temperatures. This has been done to achieve energy efficiency and lower energy bills. If you need to modify your program schedule, see page 7.

EVENT	THERMOSTAT SYMBOL	DESIRED TEMPERATURE SETTING	TIME SCHEDULE Mon	Tue	Wed	Thu	Fri	Sat	Sun
Morning		Heat = 70° Cool = 78°	6:00 am	6:00 am	6:00 am	6:00 am	6:00 am	6:00 am	6:00 am
Day		Heat = 62° Cool = 85°	8:00 am	8:00 am	8:00 am	8:00 am	8:00 am	8:00 am	8:00 am
Evening		Heat = 70° Cool = 78°	5:00 pm	5:00 pm	5:00 pm	5:00 pm	5:00 pm	5:00 pm	5:00 pm
Night		Heat = 62° Cool = 82°	10:00 pm	10:00 pm	10:00 pm	10:00 pm	10:00 pm	10:00 pm	10:00 pm

IMPORTANT: READ ALL INSTRUCTIONS THOROUGHLY

Programming your Aprilaire Thermostat is done in three easy steps: setting the clock, setting the event times, and setting your desired temperatures.

Setting Or Changing The Clock

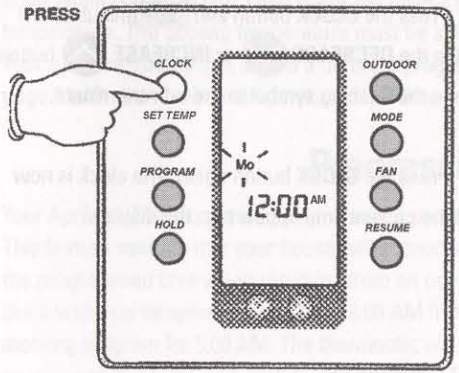

Step 1: Press the **CLOCK** button and **"Mo"** (or another day of the week) will flash. Use the **DECREASE** or **INCREASE** button to change the flashing symbol to the current day of week.

Download from Www.Somanuals.com. All Manuals Search And Download.

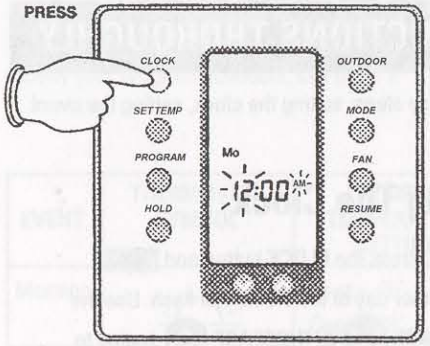

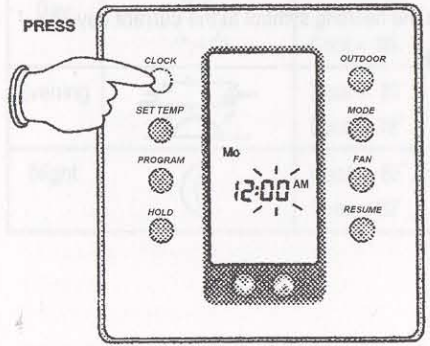

Step 2: Press the **CLOCK** button again and **"12:"** (hours) and **"AM"** or **"PM"** will flash. Use the **DECREASE** or **INCREASE** button to change the flashing symbol to the current hour making sure the hour has the proper **AM** or **PM** designation.

Step 3: Press the **CLOCK** button and **":00"** (minutes) will flash. Use the **DECREASE** or **INCREASE** button to change the flashing symbol to the current minute.

Step 4: Press the **CLOCK** button again. The clock is now set and the current time appears on the display.

Download from Www.Somanuals.com. All Manuals Search And Download.

Setting Or Changing The Program

Programming your Aprilaire Electronic Thermostat involves selecting the temperature you want in your home and selecting the time you want it to be that temperature. Your Aprilaire Thermostat will allow a maximum of 4 time schedules per day. Each time schedule is known as an "event." The **Morning** event is typically when you wake up and is the first event of the day. The **Day** event is typically set when you leave for work. The **Evening** event is typically set when you come home from work and the **Night** event is set when you go to bed. Each event will have 2 temperatures, 1 heating temperature and 1 cooling temperature. The cooling temperature must be at least 2 degrees higher than the heating temperature. Your Aprilaire Thermostat allows a different program for each day of the week. Complete the chart on page 7 with your desired temperatures and time schedules before beginning programming.

Progressive Recovery

Your Aprilaire Thermostat is equipped with a programming feature called "Progressive Recovery." This feature assures that your house will economically achieve the desired comfort temperature at the programmed time when returning from an economy or setback temperature. For example, if you like a wake-up temperature of 68°F at 6:00 AM from a setback of 65°F it is not necessary to set the morning program for 5:00 AM. The thermostat will automatically start warming your house in advance so your comfort temperature is reached on time. The progressive recovery feature must be activated in order to work.

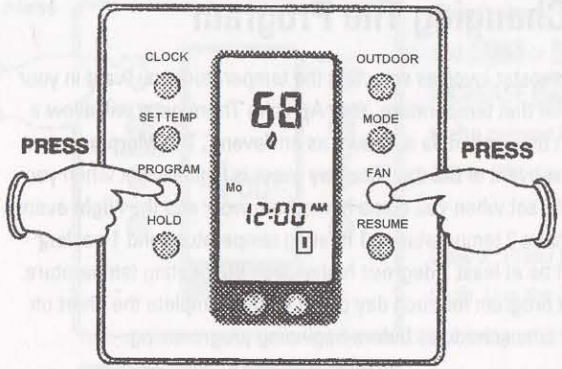

To activate the progressive recovery mode simultaneously press the **PROGRAM** and **FAN** buttons. A small thermostat icon, " ", will appear under the clock. Once in this mode proceed with programming your thermostat remembering to use exact times for each event time change.

NOTE: If not using Progressive Recovery, it will take some time for your heating or cooling system to reach the desired temperature when returning from a setback. Therefore, it is suggested you set your program time before the actual time you want your home to reach the desired temperature. For example, if you get up at 7:00 AM and have a 6 degree setback, set your **Morning** event at 6:00 AM to be sure the desired temperature is reached by 7:00 AM.

NOTE: This thermostat can be programmed with either 2 events per day (day and night) or 4 events per day (morning, day, evening, and night). Before programming the thermostat, decide which setting is best for your personal schedule. The thermostat is factory preset for 4 events per day. To change to two events per day, refer to page 19 "Optional Settings for Additional Thermostat Features," or contact your contractor for assistance.

PROGRAM SCHEDULE

			TIME SCHEDULE						
EVENT	**THERMOSTAT SYMBOL**	**DESIRED TEMPERATURE SETTING**	**Mon**	**Tue**	**Wed**	**Thu**	**Fri**	**Sat**	**Sun**
Morning		Heat = Cool =							
Day		Heat = Cool =							
Evening		Heat = Cool =							
Night		Heat = Cool =							

NOTE: While programming you must press a button at least every 2 minutes or the thermostat will revert back to the operational mode. If this happens, simply repeatedly press or press and hold the **PROGRAM** button until you get back to where you left off. The information you have already entered has been retained.

NOTE: If consecutive events have the same temperature, you can skip an event by simultaneously pressing the **PROGRAM** and **MODE** buttons. Press and release the **PROGRAM** button to advance to the next event.

Download from Www.Somanuals.com. All Manuals Search And Download.

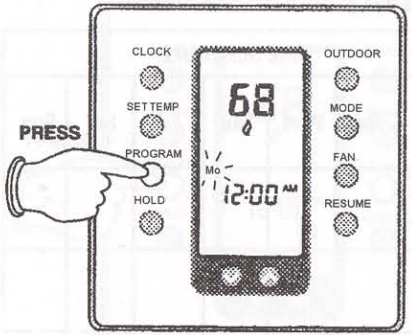

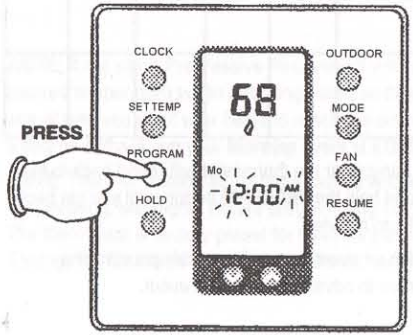

Setting Or Changing Program Times

Step 1: Press and release the **PROGRAM** button. **"Mo"** or the current day of the week will flash and the **Morning** "☀" event symbol will appear on the display. Press the **DECREASE** button or **INCREASE** button to access the day of the week you wish to start programming or to change the existing program.

Step 2: Press and release the **PROGRAM** button. The hours and **"AM"** or **"PM"** will flash. Press the **DECREASE** button or **INCREASE** button to set the start time hours for the **Morning** "☀" event for Monday (or any other day as set in step 1).

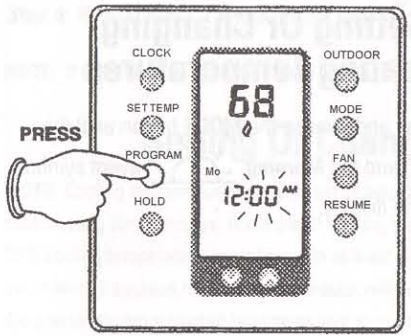

Step 3: Press and release the **PROGRAM** button. The minutes will flash on the display. Press the **DECREASE** button or **INCREASE** button to set the select time minutes for the **Morning** "☀" event (program times are set in ten-minute increments).

Step 4: Press and release the program button. The **Day** "☀" event symbol, flashing hours, and **"AM"** or **"PM"** will appear on the display. Repeat steps 2 and 3 for the **Day** "☀", **Evening** "🌇", and **Night** "☾".

Step 5: Press and release the **PROGRAM** button. The word **"Copy"** and the day just programmed will appear on the display. If your schedule is the same for consecutive days, press the **DECREASE** button or **INCREASE** button to add days to the display. This prevents from having to program the same times over and over again or continue on to step 6 to program the next day.

Step 6: Press and release the **PROGRAM** button to continue to the next day to be programmed. Repeat steps 2-5 for each day.

Download from Www.Somanuals.com. All Manuals Search And Download.

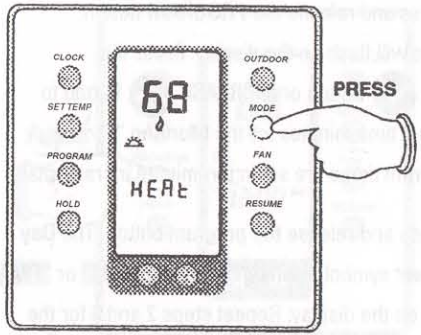

Setting Or Changing Heating Temperatures

Step 1: Press and release the **MODE** button until the word **"Heat"** and the **Morning** "☀" event symbol appear on the display.

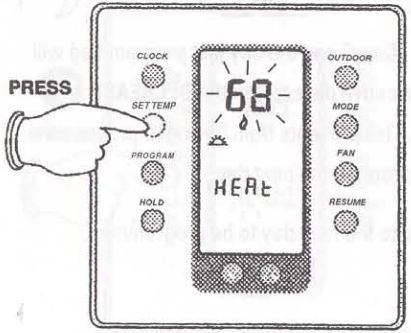

Step 2: To set all program temperatures, press and release the **SET TEMP** button. The **Morning** "☀" event symbol and flashing temperature will appear on the display.

Step 3: Press the **DECREASE** ⌄ button or **INCREASE** ⌃ button to set the desired **Morning** "☀" event temperature.

Step 4: Repeat steps 2 and 3 for the **Day** "☀", **Evening** "🌇", and **Night** "☾" events.

NOTE: If thermostat is set for 2 events per day, only the **Day** "☀" and **Night** "☾" events can be programmed.

Setting Or Changing Cooling Temperatures

NOTE: Cooling temperatures ***must*** be set at least 2 degrees higher than heating temperatures. (Example: If heating temperature is set at 70°F, cooling temperature must be set to at least 72°F or higher.) If not set at least 2 degrees higher, the thermostat will automatically lower the previously programmed heating temperature to maintain the 2 degree separation.

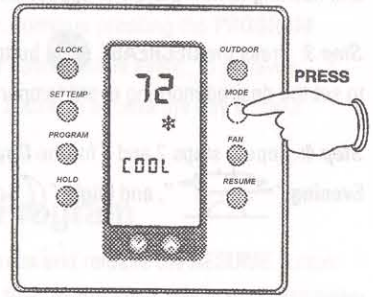

Download from Www.Somanuals.com. All Manuals Search And Download.

Step 1: Press and release the **MODE** button until the word "**COOL**" and the "❄" cooling symbol appear on display.

Step 2: To set all program temperatures, press and release the **SET TEMP** button. The **Morning** "☀" event symbol and flashing temperature will appear on the display.

Step 3: Press the **DECREASE** button or **INCREASE** button to set the desired morning event temperature.

Step 4: Repeat steps 2 and 3 for the **Day** "☀", **Evening** "🌇", and **Night** "☾" events.

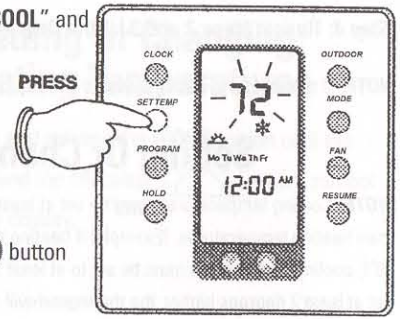

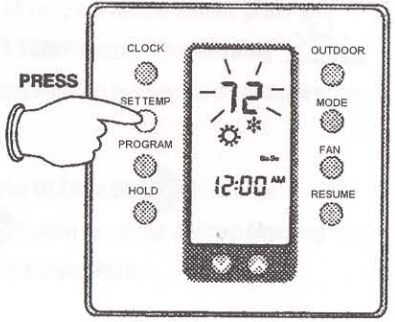

NOTE: If thermostat is set for 2 events per day, only the **Day** "☀" and **Night** "☾" events can be programmed.

Reviewing Programmed Time Schedules And Temperature Settings

Step 1: Press and release the **MODE** button repeatedly to advance to the desired mode (heating or cooling).

Step 2: Press and release the **PROGRAM** button to begin review. Continue pressing the **PROGRAM** button to review the time schedules and temperature settings for each desired event. To review a specific day use the **DECREASE** button or **INCREASE** button to access the day without having to view previous programmed days.

To Start Running The Program

After all temperatures and start times have been programmed, press and release the **RESUME** button to start running programs. If no button is pressed thermostat will resume automatically in approximately 15 seconds.

Download from Www.Somanuals.com. All Manuals Search And Download.

For Best Performance

The Aprilaire Model 8555 thermostat is designed for accurate temperature control and easy operation. The following guidelines should be followed to ensure proper operation of the thermostat:

1. When the thermostat is operating, close the cover to allow for proper air circulation over the temperature sensor.
2. Do not place anything which can give off warm or cool air, such as candles or portable humidifiers, near the thermostat.
3. Although the thermostat is internally equipped to prevent short cycling of the furnace and air conditioner, it is possible to inadvertently override this protection. Do not start, stop, and restart the equipment without allowing a minimum of 2 minutes between heating or cooling cycles.

Thermostat Operation

The Model 8555 is a full-featured thermostat which allows for additional control and operations after basic time and temperature programming is completed. In addition to the programming buttons used to set up all event times and temperatures, additional buttons control the following functions:

Aprilaire Model 8555
7 Day Programmable Thermostat

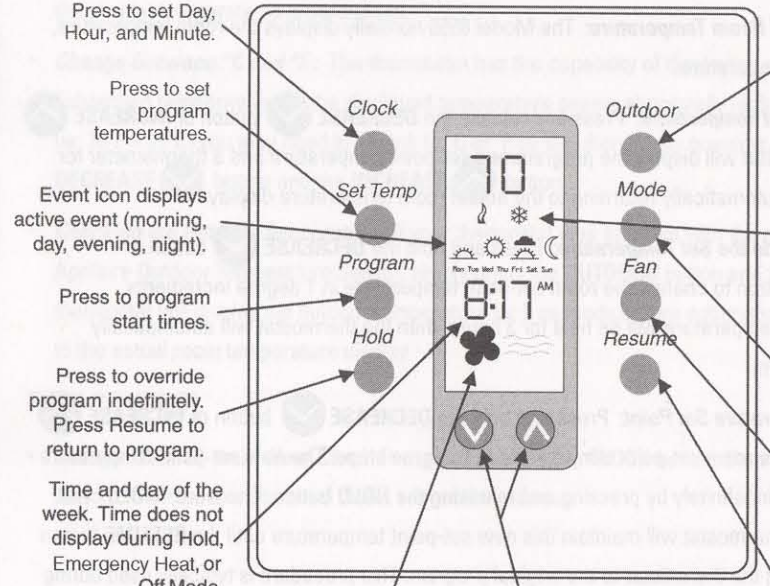

Download from Www.Somanuals.com. All Manuals Search And Download.

TEMPERATURE CONTROL

- ***Reading the Actual Room Temperature:*** The Model 8555 normally displays the room temperature, not the set-point temperature.
- ***Check the Set-Point Temperature:*** Press and release the **DECREASE** button or **INCREASE** button. The thermostat will display the programmed set-point temperature and a thermometer for 5 seconds before automatically returning to the actual room temperature display.
- ***Temporarily Override the Set Temperature:*** Press and hold the **DECREASE** button or **INCREASE** button to change the room set-point temperature in 1 degree increments. The new set-point temperature will be held for 3 hours, then the thermostat will automatically return to the program.
- ***Hold a New Temperature Set Point:*** Press and hold the **DECREASE** button or **INCREASE** button to change the room set-point temperature in 1 degree steps. The new set-point temperature can be maintained indefinitely by pressing and releasing the **HOLD** button. The word **"HOLD"** will be displayed. The thermostat will maintain this new set-point temperature until the **RESUME** button is pressed returning the thermostat to the original program. This procedure is typically used during extended vacant periods (vacations, business trips, etc.), to hold an economical set point until you return.

- ***Returning to Programmed Operation:*** At any time, press the **RESUME** button to return the thermostat to operate as programmed.
- ***Change Between °C and °F:*** The thermostat has the capability of displaying either Celsius or Fahrenheit temperatures. If the displayed temperature seems abnormally high or low (ie: 70°F = 21°C) you may need to switch to °C or °F by simultaneously pressing the **DECREASE** button and the **INCREASE** button.
- ***Checking the Outdoor Temperature:*** If your thermostat was installed with the optional Aprilaire Outdoor Temperature Sensor, simply press the **OUTDOOR** button and the thermostat will display the outdoor temperature for 5 seconds before automatically returning to the actual room temperature display.

TIME CONTROL

- ***Change From 12- to 24-Hour Clock:*** Press and release the **CLOCK** button, then press the **MODE** button. To return to a standard clock, repeat the process.

Download from Www.Somanuals.com. All Manuals Search And Download.

EQUIPMENT CONTROL

- ***Turning on the Fan:*** At any time the system fan can run continuously by pressing the **FAN** button. Note that a **Fan** icon, " ", appears in the lower part of the display indicating that the fan is continuously operating. To return the fan to the normal operating mode, press the **FAN** button again which will remove the icon from the display. In the normal operating mode the fan will only run when the heat pump is operating. Continuous fan operation is beneficial if your system is equipped with a high efficiency air cleaner or a humidifier, or to circulate air in the home.
- ***Selecting Cooling Mode:*** Press the **MODE** button until the word "**COOL**" appears on the display. In this mode the heat pump will maintain temperature according to the programming previously completed unless an override temperature has been entered. Note that a **Snowflake** icon, " ", is on the display, which flashes when the heat pump is running. Your thermostat will automatically turn on and off any additional stages of cooling as required.
- ***Selecting Heating Mode:*** Press the **MODE** button until the word "**HEAT**" appears on the display. In this mode the heat pump will maintain temperature according to the programming previously completed unless an override temperature has been entered. Note that a **Flame** icon, " ," is on the display, which flickers when the heat pump is running. Your thermostat will automatically turn on and off any additional stages of heating as required.
- ***Selecting Emergency Heat Mode:*** Press the **MODE** button until "**E ht**" appears on the display. In this mode the backup heat source (other than the heat pump) will maintain temperature according to the programming previously completed unless an override temperature has been entered.
- ***Automatic Heating and Cooling:*** This mode can be useful during times of the year and in climates when it is cool at night requiring heating but warm in the afternoon requiring cooling. Press and release the **MODE** button until the word "**AUTO**" appears on the display. In this mode the heat pump will maintain temperature according to the programming previously completed unless an override temperature has been entered. The heat pump will operate in either the heating or cooling mode depending on which programmed set point is closest to the room temperature. Note that both the **Snowflake** " " and **Flame** " " icons are on the display. The **Snowflake** will flash or the **Flame** will flicker depending on which mode the heat pump is operating in.
- ***Turning the System Off:*** Press the **MODE** button until the word "**OFF**" appears on the display. In this mode the heat pump will not operate regardless of the temperature. The thermostat can still be

Download from Www.Somanuals.com. All Manuals Search And Download.

programmed, the optional outdoor temperature sensor will work and the fan will turn on if the **FAN** button is pressed. To avoid frozen water pipes, **DO NOT** use the **OFF** mode for long periods of time during sub-freezing temperatures.

NOTE: After selecting a new mode, the thermostat initiates a delay of up to 4 minutes to protect the heating and cooling equipment.

Optional Settings For Additional Thermostat Features

The Model 8555 thermostat is equipped with 8 **DIP** switches located inside the thermostat on the printed circuit board. These switches are preset by the factory to typical home heating and cooling system requirements. The installing contractor also reviewed the settings during installation to be sure the thermostat will operate properly with your heating and cooling system.

The **DIP** switches can however be changed to customize the thermostat's operation to your particular needs. This should only be done after consulting with your contractor.

The Model 8555 **DIP** switches control the following functions:

No. 1 – 4 or 2 Events Per Day. The switch is factory preset for 4 events per day; **Morning**, **Day**, **Evening**, and **Night**. If it is more convenient you can select a 2-event day, **Morning** and **Night**, by moving this switch to the **ON** position.

No. 2 – Smart Fan. The thermostat is factory preset with the **Smart Fan** option off. This allows the system fan to operate normally with the heating and cooling equipment. If the **Smart Fan** option is turned on by placing the **DIP** switch in the **ON** position when the **Fan** button on the thermostat is pushed (indicated by the fan icon on the display), the system fan will run continuously during the **Morning**, **Day**, and **Evening** events. During the **Night** event, the fan will automatically revert to cycling on and off with the heating and cooling equipment.

No. 3 – 4 Minute / 2 Minute Minimum Equipment On/Off Times. This switch is factory preset at 2 minutes. This switch provides short cycle protection for the heat pump. If you feel that the heat pump turns on and off too many times per hour, ask your contractor about changing the switch to a 4 minute minimum on time. Keep in mind, however, that this may increase the overall temperature variation in the house due to longer run and off times. **Do not** change the position of the switch without first consulting with your contractor.

No. 4 – Keypad Lock. If tampering with the thermostat is expected and unwanted, the keypad can be locked by moving this switch from the factory-preset **OFF** position to **ON**. This should not be done until all programming is finalized. In the locked position only the following functions can be done:

- The outdoor temperature button will display the outdoor temperature.

Download from Www.Somanuals.com. All Manuals Search And Download.

- The **DECREASE** button or **INCREASE** button will temporarily change the set point a maximum of plus or minus 3 degrees for a period of 1 hour, before the thermostat automatically returns to the original program.

If the thermostat does not respond when a button is pushed it may be because the keypad has been locked. A **Lock** icon " " will appear when a button other than **OUTDOOR** is pushed if the keypad has been locked.

No. 5 – Normal Heat Pump/Add-on Heat Pump. This switch is factory preset to the **OFF** position to operate in the Normal heat pump mode. If your heating and cooling system is an add-on heat pump configuration, your contractor changed the position of this switch to match your equipment. **Do not** change the position of this switch as it could result in extraordinarily high operation costs.

No. 6 – Single-/Multi-Stage Outputs. This switch is factory preset to the **ON** position, allowing the thermostat to operate 2-stage heat pumps. **Do not** change the position of this switch without first consulting your installing contractor. Two-stage systems will not operate properly with the switch set for single-stage outputs.

No. 7 – Free LED 1 with LCD Filter Symbol. When moved to the **ON** position, this switch turns on a **Replace Filter** icon on the display screen when a 24-volt signal is sent to **LED 1** (top left edge of the

thermostat panel, not on the display). If your heating/cooling system has the required controls for automatically determining when to change the air filter, this feature is beneficial. Consult your contractor for further information.

No. 8 – Free LED 2 with LCD Wrench Symbol. When moved to the **ON** position, this switch turns on a **Wrench** icon on the display screen when a 24-volt signal is sent to **LED 2** (top right edge of the thermostat panel, not on the display). This feature is beneficial if your heating/cooling system has the required controls for automatically signaling when a particular problem exists. Consult your contractor for further information.

Download from Www.Somanuals.com. All Manuals Search And Download.

To change the DIP switch settings, the thermostat must be removed from the base which is attached to the wall. **The power to the thermostat must be turned off before disassembling or the thermostat can be permanently damaged. If you do not know where the switch is that controls the power to your thermostat, do not attempt to access the DIP switches.** The following procedure must be carefully followed:

a) Turn off power to the thermostat.

b) Completely open the thermostat cover. The cover will snap into this position.

c) Carefully insert a medium-sized flathead screwdriver into the latch access slot *(see Figure 1)*.

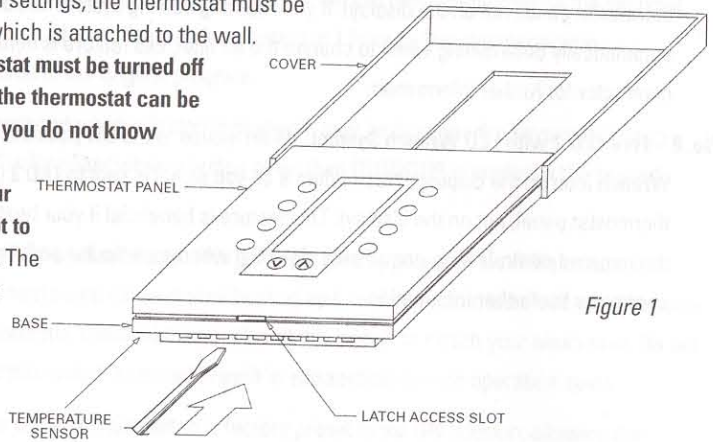

Figure 1

CAUTION: **TO PREVENT DAMAGE, AVOID CONTACT WITH BLUE TEMPERATURE SENSOR ON BOTTOM RIGHT-HAND CORNER OF THERMOSTAT CIRCUIT BOARD.**

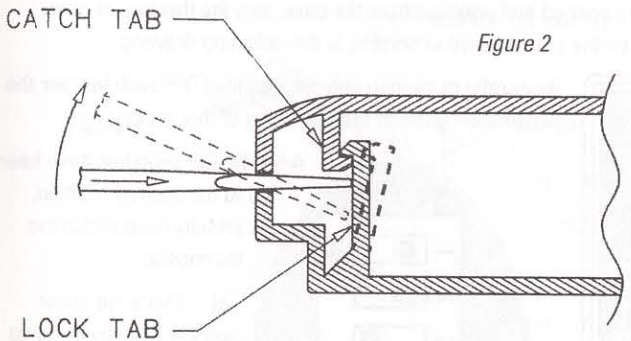

Figure 2

d) Gently push in and pry up on the handle of the screwdriver until the lock tab disengages from the catch tab *(you should feel or hear a click – see Figure 2)*.

e) After the latch releases, grip the thermostat panel at the bottom corners and swing it up and away from the base to completely separate *(see Figure 3)*.

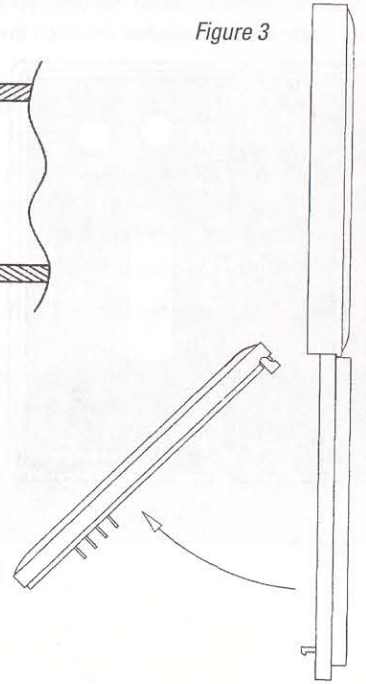

Figure 3

Download from Www.Somanuals.com. All Manuals Search And Download.

Once the thermostat panel has been opened and removed from the base, turn the thermostat over and locate the DIP switches found on the circuit board according to the following drawing:

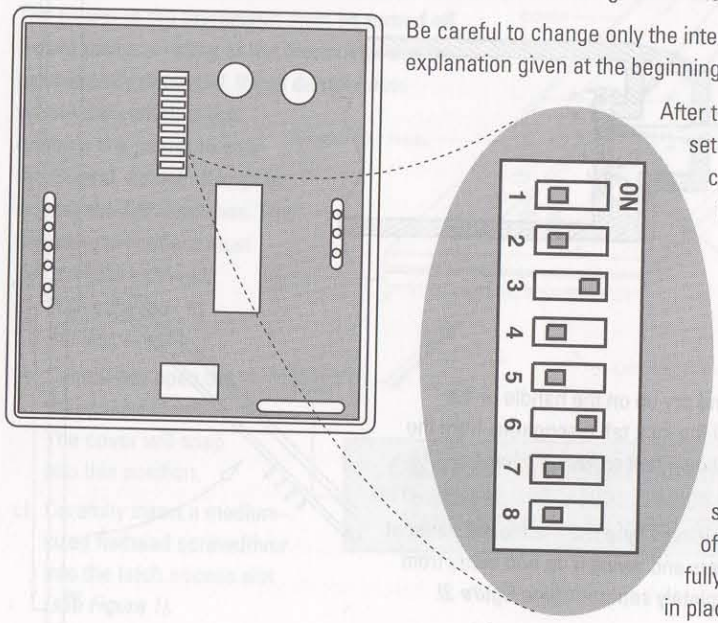

Be careful to change only the intended DIP switches per the explanation given at the beginning of this section.

After the DIP switches have been set to the desired position, carefully reassemble the thermostat.

a) Place the cover on the base by lining up the 2 round pegs on the bottom of the cover with the half circle cutouts on the top of the base. Note that the bottom of the cover when fully open slides in behind the top of the base. Swing the cover fully open. The cover will stay in place.

Figure 4

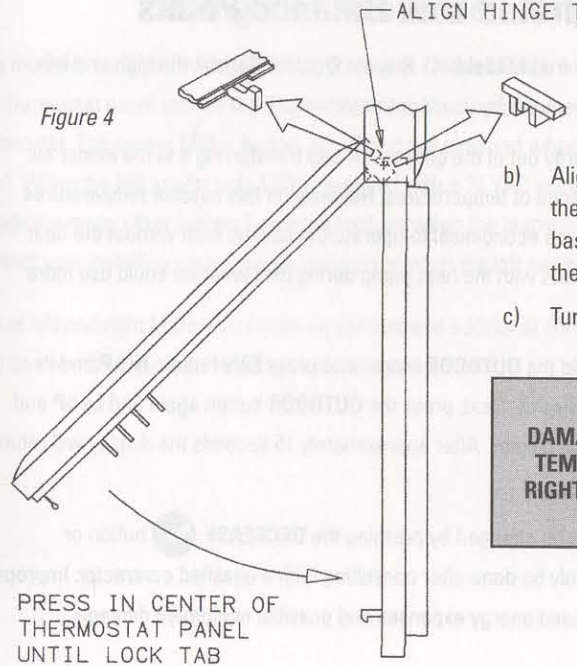

b) Align the hinge tabs on the base and thermostat panel. Swing the panel to the base and snap in place at bottom of thermostat panel *(see Figure 4)*.

c) Turn the thermostat power back on.

CAUTION: TO PREVENT DAMAGE, AVOID CONTACT WITH BLUE TEMPERATURE SENSOR ON BOTTOM RIGHT-HAND CORNER OF THERMOSTAT CIRCUIT BOARD.

Download from Www.Somanuals.com. All Manuals Search And Download.

Setting High And Low Balance Points

If your system is installed with the required Model 8041 Remote Outdoor Sensor, the high and low balance points should have been properly set by your contractor.

Heat pumps operate by extracting energy out of the outdoor air and transferring it to the indoor air. This process is efficient over a wide range of temperatures. However, at low outdoor temperatures there is a point at which it becomes more economical to operate the backup heat without the heat pump. Conversely, the use of backup heat with the heat pump during mild weather could use more energy than is required to heat the home.

To review the set points, press and hold the **OUTDOOR** button and press **FAN** button. **Hi bP** and its temperature value will appear on the display. Next, press the **OUTDOOR** button again and **Lo bP** and its temperature value will appear on the display. After approximately 15 seconds the display will return to normal.

After accessing a balance point, it can be changed by pressing the **DECREASE** button or **INCREASE** button. This should only be done after consulting with a qualified contractor. Improperly set balance points can result in increased energy expenses and possible equipment damage.

Download from Www.Somanuals.com. All Manuals Search And Download.

Using The Available LED Indicators

This model is equipped with 3 **LED** indicator lights. These **LED**s are located along the top edge of the thermostat panel (not on the display) and look like small, clear edges protruding out of the top of the thermostat. The center **LED** is factory wired and will glow red when the backup heat source is being used. When the left and/or right **LED** is supplied with a 24 VAC signal, the **LED**s glow red and can be used to indicate many other system functions such as when the humidifier or fresh air exchanger is running. Contact your installing contractor to understand what the left and/or right **LED**s signal.

Use of left and right **LED**s will require equipment and additional wiring at the thermostat which should only be done by a qualified heating and cooling contractor.

In Case Of Power Failure

The Model 8555 thermostat does not require a battery. If the power goes out the letters "**AC**" appear on the display indicating power is not being supplied to the thermostat. "**AC**" will remain on the display for up to approximately 1 hour after the power goes out. During the period that the power is off, the heating/cooling system will not operate.

This thermostat is equipped with a continuous memory feature which does not require any battery. The thermostat will never lose what has been programmed regardless of the length of the power outage. If the thermostat has been set to "**Hold**" a particular temperature and the power fails, the thermostat will maintain the hold temperature when the power is restored.

After a period of 1 hour without power the clock will need to be reset. The clock will default to 12:00 AM. Refer to the Programming Instructions to reset the clock.

Cleaning

If the surface of the thermostat becomes dirty it can be cleaned with plain water or many non-abrasive household cleaners, such as glass cleaner. When using any cleaner be careful not to get any into the interior of the thermostat. Do not spray any cleaner directly onto the thermostat. Spray the cleaner onto a soft cloth and wipe the surface of the thermostat.

Limited Warranty

Your Research Products Corporation Aprilaire® Thermostat unit is expressly warranted for two (2) years from date of installation to be free from defects in materials and workmanship.

Research Products Corporation's exclusive obligation under this warranty shall be to supply, without charge, a replacement for any thermostat which is found to be defective within a two (2) year period and which is returned, together with the date of installation, no later than thirty (30) days after said two (2) year period by you to either your original supplier or to Research Products Corporation, Madison, Wisconsin 53701.

THIS WARRANTY SHALL NOT OBLIGATE RESEARCH PRODUCTS CORPORATION FOR ANY LABOR COSTS AND SHALL NOT APPLY TO DEFECTS IN WORKMANSHIP OR MATERIALS FURNISHED BY YOUR INSTALLER AS CONTRASTED TO DEFECTS IN THE THERMOSTAT ITSELF.

IMPLIED WARRANTIES OF MERCHANTABILITY OR FITNESS FOR A PARTICULAR PURPOSE SHALL BE LIMITED IN DURATION TO THE AFORESAID TWO YEAR PERIOD. RESEARCH PRODUCTS CORPORATION'S LIABILITY FOR INCIDENTAL OR CONSEQUENTIAL DAMAGES, OTHER THAN DAMAGES FOR PERSONAL INJURIES, RESULTING FROM ANY BREACH OF THE AFORESAID IMPLIED WARRANTIES OR THE ABOVE LIMITED WARRANTY IS EXPRESSLY EXCLUDED. THIS LIMITED WARRANTY IS VOID IF DEFECT(S) RESULT FROM FAILURE TO HAVE THIS THERMOSTAT INSTALLED BY A QUALIFIED HEATING AND AIR CONDITIONING CONTRACTOR. IF THE LIMITED WARRANTY IS VOID DUE TO FAILURE TO USE A QUALIFIED CONTRACTOR, ALL DISCLAIMERS OF IMPLIED WARRANTIES SHALL BE EFFECTIVE UPON INSTALLATION.

Some states do not allow limitations on how long an implied warranty lasts or the exclusion or limitation of incidental or consequential damages, so the above exclusion or limitations may not apply to you.

This warranty gives you specific legal rights and you may also have other rights which vary from state to state.

Download from Www.Somanuals.com. All Manuals Search And Download.

Aprilaire®

THE BEST IN INDOOR AIR COMFORT

The *Aprilaire® Total Indoor Air Comfort System* is an integrated group of air quality enhancement products designed to work with your heating and cooling system to make your home more comfortable. For the best in indoor air quality, ask your heating and cooling contractor about these fine Aprilaire products, or visit us at **www.aprilaire.com** for your *Indoor Air Solutions*.

Automatic Humidifier

The Best Cure For Dryness®

The world's first computer-equipped, completely automatic humidifier.

High Efficiency Air Cleaner

Nobody Makes Clean Air Easier®

The economical, trouble-free, high efficiency air cleaner for your home.

Fresh Air Exchanger

Only The Freshest Homes Have April Air™

Your best value for a constant, controlled supply of fresh air with energy-recovery.

Zone Control System

Custom Comfort Throughout Your Home®

The most reliable way to achieve temperature control in every area of your home.

Electronic Thermostat

Energy Efficiency Never Looked So Good™

Ultra-thin, easy-to-use programmable or digital controls featuring pinpoint accuracy.

IRP® RESEARCH PRODUCTS CORPORATION
P.O. BOX 1467 • MADISON, WI 53701-1467

Products For Better Indoor Air Quality™

B2202157 REV. 11/99 Download from Www.Somanuals.com. All Manuals Search And Download. 110-793

Free Manuals Download Website

http://myh66.com

http://usermanuals.us

http://www.somanuals.com

http://www.4manuals.cc

http://www.manual-lib.com

http://www.404manual.com

http://www.luxmanual.com

http://aubethermostatmanual.com

Golf course search by state

http://golfingnear.com

Email search by domain

http://emailbydomain.com

Auto manuals search

http://auto.somanuals.com

TV manuals search

http://tv.somanuals.com