Amana® Undercounter Dishwasher

PRODUCT MODEL NUMBERS

ADB1400AW ADB1600AW

Electrical Requirements: 120-volt, 60-Hz, AC-only, 15- or 20-amp. fuesd electrical supply. Copper wire only. A timedelay fuse or circuit breaker and separate circuit is recommended.

If connecting dishwasher with a power supply cord: Use UL listed Power Supply Cord Kit (Part No. 4317824) marked for use with dishwashers. Follow the kit instructions for installing the power supply cord.

Power supply cord must plug into a grounded three-prong, outlet, located in the cabinet next to the dishwasher opening. Outlet must meet all local codes and ordinances.

If direct wiring dishwasher: Use flexible, armored or nonmetallic, sheathed copper wire with grounding wire that meets the wiring requirements for your home and local codes and ordinances.

Use a UL Listed or CSA Approved strain relief.

Water Supply Requirements: A hot water line with 20 to 120 psi (138 to 862 kPa) water pressure. Water temperature must be 120°F (49°C) water at dishwasher. Use ⅜" O.D. copper tubing with compression fitting or flexible braided water supply line (½" minimum plastic tubing is not recommended). ⅜" Compr x ¾" Hose fitting for part or kit, see local retailer or call Whirlpool Parts: 1-800-442-9991. Part Number W10273460. Do not solder within 6" (15.2 cm) from water inlet valve.

Drain Requirements: A new drain hose is supplied with your dishwasher. If this is not long enough, use a new drain hose with a maximum length of 12' (3.7 m) (Part No. 3385556) that meets all current AHAM/IAPMO test standards, is resistant to heat and detergent, and fits the 1" (2.5 cm) drain connector of the dishwasher.

Make sure to connect the drain hose to waste tee or disposer inlet above drain trap in house plumbing and 20" (50.8 cm) minimum above the floor. It is recommended that the drain hose either be looped up and securely fastened to the underside of the counter, or be connected to an air gap.

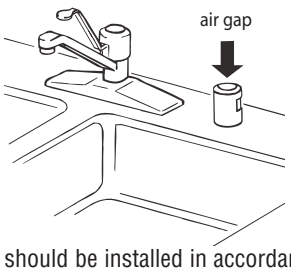

Make sure to use an air gap if the drain hose is connected to house plumbing lower than 20" (50.8 cm) above subfloor or floor.

Use ½" (1.3 cm) minimum I.D. drain line fittings.

If required, the air gap should be installed in accordance with the air gap installation instructions. When connecting the air gap a rubber hose (not provided) will be needed to connect to the waste tee or disposer unit.

PRODUCT DIMENSIONS

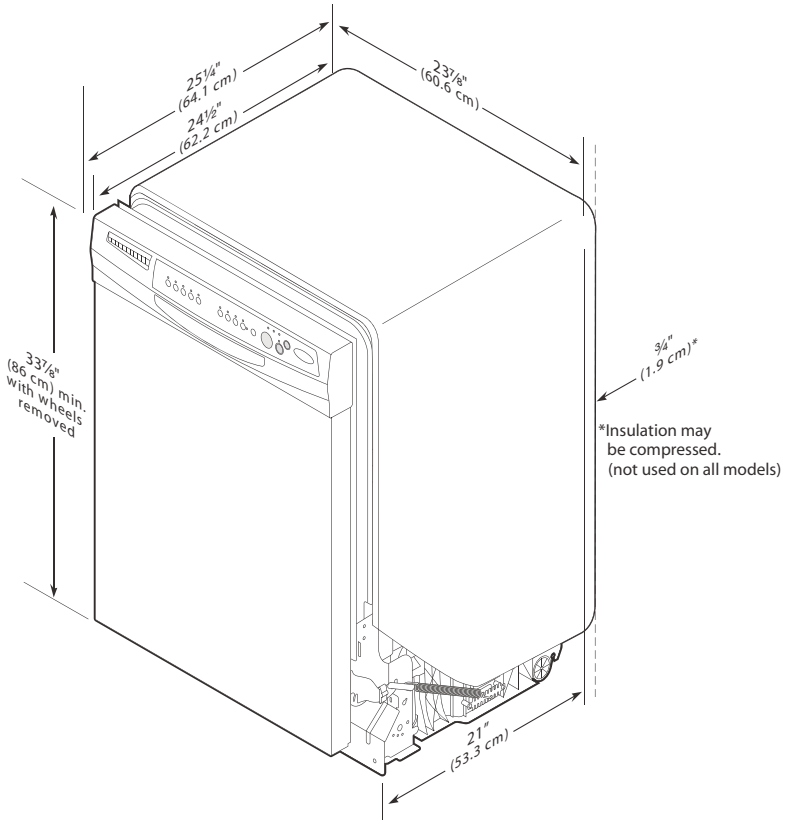

CABINET CUTOUT DIMENSIONS

Corner locations require a 2" (5.1 cm) minimum clearance between the side of the dishwasher door and the wall or cabinet.

NOTE: Shaded area of cabinet walls show where utility connections may be installed.

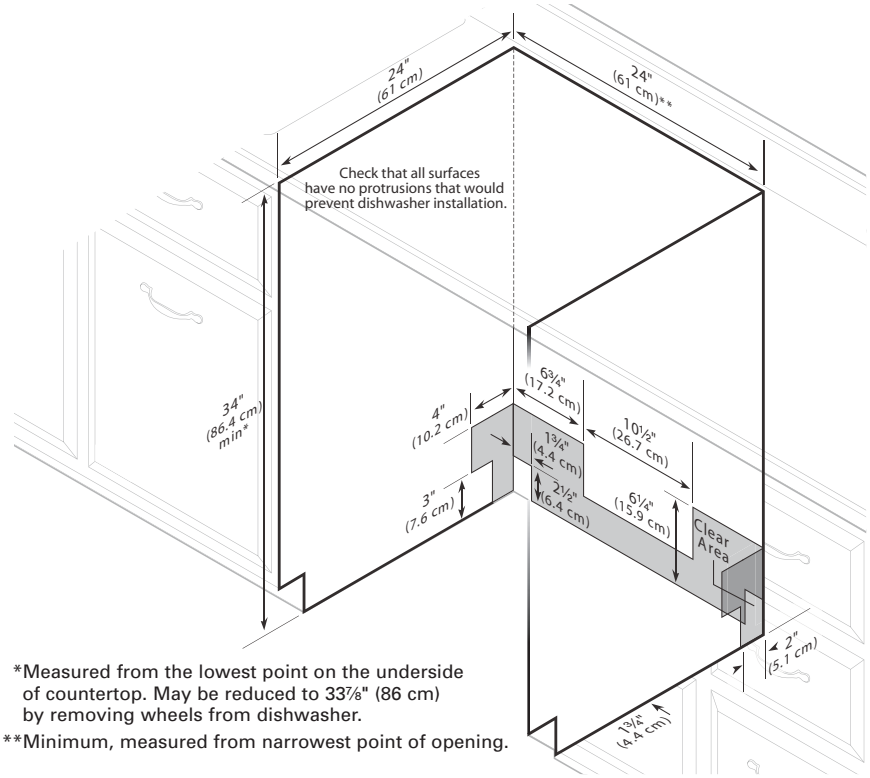

*Measured from the lowest point on the underside of countertop. May be reduced to 33⅞" (86 cm) by removing wheels from dishwasher.

**Minimum, measured from narrowest point of opening.

Because Whirlpool Corporation policy includes a continuous commitment to improve our products, we reserve the right to change materials and specifications without notice.

Dimensions are for planning purposes only. For complete details, see Installation Instructions packed with product. Specifications subject to change without notice.

Ref. W10329308-D-AM 6/11

Download from Www.Somanuals.com. All Manuals Search And Download.

Free Manuals Download Website

http://myh66.com

http://usermanuals.us

http://www.somanuals.com

http://www.4manuals.cc

http://www.manual-lib.com

http://www.404manual.com

http://www.luxmanual.com

http://aubethermostatmanual.com

Golf course search by state

http://golfingnear.com

Email search by domain

http://emailbydomain.com

Auto manuals search

http://auto.somanuals.com

TV manuals search

http://tv.somanuals.com