Axor Montreux

Bath towel holder, roll holder / Porte-serviette, Dèrouleur papier WC / Toallero, Portarrollo

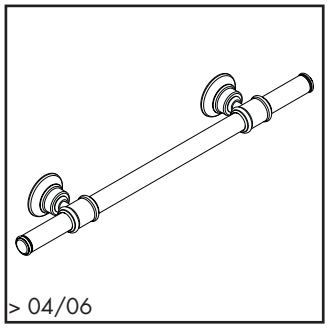

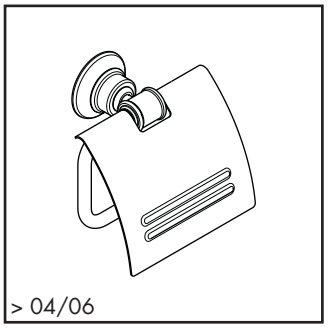

42030XX0 / 42060XX0 / 42080XX0

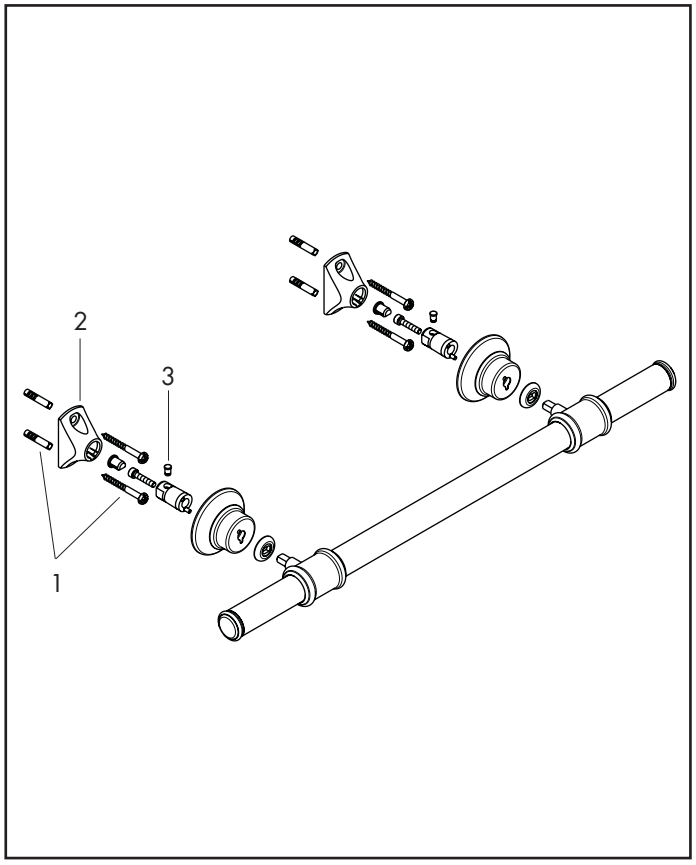

42036XX0

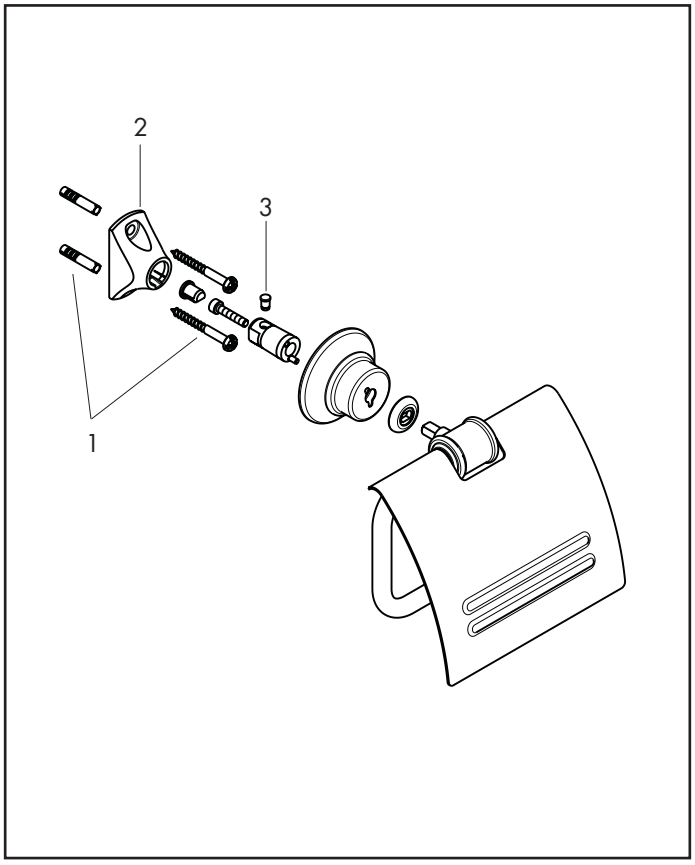

Pos.	Description	Description	Denominación	Nr./Nr./N°	
1	mounting set	set de fixation	Set de fijación	40915000	
2	support element	support	Soporte	96341000	
3	pin	goupille	Varilla	97546000	

XX = Please see page 1.1 for finish
XX = Description des codes couleur page 1.1
XX = Para el código de acabados ver página 1.1

Download from Www.Somanuals.com. All Manuals Search And Download.

Free Manuals Download Website

http://myh66.com

http://usermanuals.us

http://www.somanuals.com

http://www.4manuals.cc

http://www.manual-lib.com

http://www.404manual.com

http://www.luxmanual.com

http://aubethermostatmanual.com

Golf course search by state

http://golfingnear.com

Email search by domain

http://emailbydomain.com

Auto manuals search

http://auto.somanuals.com

TV manuals search

http://tv.somanuals.com